TECHNICAL DATA

VERTICAL AMPLIFIER AND ATTENUATOR

3dB bandwidth	d.c. or 2Hz - 10MHz
10 to 90% risetime	35ns nominal
Calibrated deflection sensitivity ±5%	10mV - 50V/cm
Minimum sensitivity approx.	125V/cm
Maximum input (via 400V capacitor a.c.-coupled) ...	400Vp
Maximum display amplitude	6cm d.c. - 5MHz
reducing to approx.	3cm at 10MHz
Input impedance approx.	1megohm and 47pF

HORIZONTAL DEFLECTION SYSTEM

Trigger

Internal — minimum deflection	2mm
External — a.c.-coupled	1·5Vp-p to ±15V
input impedance approx.	100kilohms and 10pF
Useful bandwidth approx.	
Automatic	50Hz - 1MHz
Trigger level	10Hz - 1MHz with 2mm amplitude 1MHz - 4MHz rising to 5mm amplitude
HF	1MHz - 10MHz or better

Sweep generator

Calibrated sweep speeds ± 5%	0·2μs - 2s/cm
Maximum speed range approx.	40ns - 5s/cm

Horizontal amplifier

3dB bandwidth	d.c. - 1MHz
10 to 90% risetime	0·35μs nominal
Deflection sensitivity approx.	0·6 - 3V/cm
Input impedance approx.	1megohm and 30pF
Maximum input	400Vp

CATHODE RAY TUBE

Display area	6 x 10cm
Overall post-deflection acceleration	4kV
Available phosphors	P31 (standard), P7 and P11
External intensity modulation	
Coupling	a.c. to first grid
Signal for cut-off at average brilliance	—20Vp approx.
Time constant	10ms approx.

www.TheValvePage.Com

FRONT PANEL OUTPUTS

Calibrator — supply frequency	500mVp-p ± 2%
Sweep sawtooth	
Amplitude	1 - 35V approx. d.c.-coupled
Minimum load	30kilohms
Probe test	0·5V approx.

POWER REQUIREMENTS

Voltage	100 - 125V in 5V steps
	200 - 250V in 10V steps
Frequency	48 - 440Hz
Consumption	24VA approx.

PHYSICAL DATA

Approximate overall dimensions and weight:

	High	*Wide*	*Deep*	*Weight*
S54A	24cm	17cm	42cm	8 kg
	9½in	6¾in	16½in	17½lb
S54AR	13·3cm	48cm	45cm	11kg
	5¼in	19in	17¾in	23¾lb

Cooling	Convection	
Approximate ambient temperature limits		
Operating	−15 to +40°C	+ 5 to +104°F
Non-operating	−25 to +70°C	−13 to +158°F

www.TheValvePage.Com

OPERATING INSTRUCTIONS

FIRST-TIME OPERATION

Before connection to the mains supply check that the voltage selector plug is inserted with the pointer indicating the local supply voltage and that the fuse is of the correct rating, 0·5A for 100 - 125V or 0·25A for 200 - 250V.

Set the front-panel controls as follows:—

BRILLIANCE	Fully anti-clockwise — POWER OFF
FOCUS	Central
ASTIG	Central
TRIG LEVEL	Fully anti-clockwise — AUTO
STABILITY	Fully clockwise
TRIG SELECTOR	NORMAL, +, INT (all buttons except lowest out)
X SHIFT	Central
X GAIN	Fully anti-clockwise
TIME/CM	5mS
VARIABLE	Fully clockwise
Y SHIFT	Central
VERNIER	Central
VOLTS/CM	100mV
VARIABLE	Fully clockwise
DC-AC	DC

Link INPUT and CAL 500mVp-p.

Plug in to the mains and switch on by the POWER OFF/BRILLIANCE control.

Allow half a minute for the instrument to warm up then rotate BRILLIANCE clockwise until a display of convenient intensity is obtained.

Centre the trace by Y SHIFT and X SHIFT.

Rotate STABILITY anti-clockwise until a stable trace is obtained.

Adjust FOCUS and ASTIG for best definition.

2·5 cycles of the calibration waveform, 5cm in amplitude, should now be observed. This is a suitable arrangement to become familiar with the use of the controls.

On removal of the INPUT link the instrument is in a condition to display most simple waveforms with appropriate adjustment of the switched and variable VOLTS/CM and TIME/CM controls.

ADDITIONAL INFORMATION AND FACILITIES

TRIG LEVEL In the AUTO position, the sweep is automatically triggered at the mean level of the waveform. When switched from AUTO, the TRIG LEVEL control enables the starting point of the sweep to be selected from any point on the displayed waveform. With control settings as for first-time operation and with the calibrator signal applied, rotation of TRIG LEVEL will cause the sweep to start at various points on the positive-going slope of the calibration waveform. If the negative TRIG SELECTOR button is pressed the above will be seen to apply to the negative-going slope.

TRIG SELECTOR

TV FIELD (FRAME) AND TV LINE Switch TRIG LEVEL to AUTO and adjust STABILITY for sweep to trigger from back edge of line or first frame pulse. With large trigger inputs it may be necessary to switch from AUTO and adjust TRIG LEVEL to obtain correct triggering. Trigger polarity relates to the polarity of video modulation.

HF Synchronisation of signals up to 10MHz or above is obtained in this condition by adjustment of TRIG LEVEL.

+ AND — These positions determine whether triggering occurs on the positive or negative going slope of a waveform.

EXT TRIG AND INT When EXT TRIG is selected, an external signal over 1·5Vp-p in amplitude may be applied between this terminal and ground to trigger the sweep. For internal triggering a display of over 2mm is required.

TIME/CM The indicated sweep rates are only attained when VARIABLE is fully clockwise and X GAIN fully anti-clockwise. Turning VARIABLE anti-clockwise reduces the sweep speed by a factor of up to approximately 2·5, whereas clockwise rotation of X GAIN expands the sweep and increases the speed by up to about 5 times.

EXT X When set to this position external horizontal deflection signals may be applied via the EXT X terminal to the horizontal amplifier. Depending on the X GAIN setting the sensitivity varies approximately from 3V/cm at CAL to 0·6V/cm. The bandwidth is from d.c. - 1MHz.

SAWTOOTH OUT A directly-coupled positive-going sawtooth, rising from 1 to 35V approximately is available when the timebase is running. To avoid over-loading the sweep generator the input resistance of an applied load should exceed 30kilohms.

PROBE TEST A positive-going fast-rise pulse is provided for probe compensation. Refer to the Recalibration section for details of procedure.

Y SHIFT AND VERNIER The Y SHIFT control produces a range of adjustment of over 2 screen amplitudes with VOLTS/CM VARIABLE at CAL, while VERNIER can be used as a fine adjustment.

DC-AC While normally operated in the AC position to block the d.c. component of signals, the DC position should be used for d.c. voltage measurement and for the display of very low frequency signals due to the a.c. coupled lower 3dB point of approximately 2Hz. Where d.c. blocking at very low frequencies is desired the signal should be fed through an external capacitor, larger than 0·1μF, with the input switch at DC.

Z MOD A signal may be applied to intensity modulate the trace via this socket. Approximately 20Vp-p is required for full modulation at normal brilliance.

SCALE ILLUM At rear on S54A. This control varies the illumination of the graticule divisions.

TRACE ROTATION At rear on S54A. This control varies the alignment of the trace with the horizontal graticule lines.

SET GAIN and SET SPEED The adjustment of these preset controls is described at the beginning of the maintenance and calibration section.

The Power Cord should be secured, with nuts and screws provided, to comply with local legislation.

www.TheValvePage.Com

CIRCUIT DESCRIPTIONS

BLOCK DIAGRAM — Figure A

INPUT ATTENUATOR AND VERTICAL AMPLIFIER

The signal to be observed is applied via the BNC input socket to the attenuator; this either passes the signal directly to the Y (vertical) amplifier or reduces the amplitude of the signal to a convenient level. The four-stage Y amplifier drives the Y plates of the CRT, causing the electron beam to be deflected in the vertical axis. On internal trigger, a fraction of the amplifier output is fed to the trigger circuit to enable the timebase sweep to lock to the signal displayed.

CALIBRATOR

A 500mVp-p squarewave at power-line frequency is provided for checking Y amplifier gain and timebase sweep speed.

TRIGGER

The circuit provides pulses of suitable amplitude and polarity to fine the sweep generator in synchronism with the internally or externally derived trigger waveforms.

SWEEP GENERATOR AND HORIZONTAL AMPLIFIER

When triggered, the sweep generator provides a ramp waveform which is fed to the X (horizontal) amplifier and to a front-panel terminal; at the same time the trace is unblanked. When the TIME/CM switch is set to EXT X, the sweep generator is disabled, the trace unblanked and an external signal may be applied to the X plates of the CRT via the horizontal amplifier.

UNBLANKING AMPLIFIER

An unblanking pulse is derived from the sweep generator to deflect the electron beam on to the CRT phosphor for the duration of a sweep A fast-rising pulse is provided at PROBE TEST for the adjustment of high-impedance probes.

CATHODE RAY TUBE

Controls affecting the appearance of the trace on the CRT screen are incorporated in this circuit. Scale illuminator and trace rotation controls are mounted at the rear of the S54A.

POWER SUPPLIES

All voltages are derived from a double-wound power transformer protected by a delay fuse.

DETAILED DESCRIPTIONS

ATTENUATOR — Figure 1

The attenuator consists of four frequency-compensated resistive dividers with ratios of 100:1, 10:1, 5:1 and 2:1. No dividers are in circuit on the basic 10mV/cm range. CV2, 5, 8 and 12 enable the input time-constant to be standardised; CV4, 7, 11 and 14 compensate each attenuator section.

Y AMPLIFIER — Figure 2

The output from the attenuator is fed to the gate of TR21. an N-channel field-effect transistor. TR21 and 22 form a paraphase amplifier with their sources long-tailed through TR23. The base of TR23 is held at about half the negative line potential by D21; this causes amplifier gain to vary in direct proportion to small changes in supply voltage and compensate for inversely proportional changes in CRT deflection sensitivity. The stabilised voltage established by D21 is also taken to the shift and calibration circuits.

CV21, C22, R30, 40, 21 and 22 serve to protect TR21 against overload, CV21 and C22 compensating the divider. VARIABLE, RV25, alters the gain of TR21 and 22 by a factor of at least 2·5. Changes in input capacitance of TR21 are compensated for by C20 in parallel with the capacitance of a short length of wire. RV26 is set to equalise the source currents of TR21 and 22 irrespective of the setting of RV25. RV73 compensates for resistor tolerances and differences in gm of the FET's which would otherwise cause unbalanced outputs at the drains of TR21 and 22 when the −12V line fluctuates in sympathy with supply voltage.

Shift voltage is applied to the gate of TR22; RV37 serves as a shift-centring adjustment. The supply to the fine and coarse shift controls is stabilised by N21 and D21.

The output at the drains of TR21 and 22 is fed to the bases of push-pull emitter-followers TR24 and 27, which reduce the loading effect of TR25 and 26 on TR21 and 22. From the emitters of TR24 and 27 the signal passes to the bases of TR25 and 26. The overall amplifier gain of about 750 is set in this stage by RV39. R60 and 70 with C30 and 31 provide thermal compensation which is adjusted by RV41. RV52 sets the mean collector potential of TR25 and 26 and thus the mean base potential of TR28 and 29; this fixes the collectors of TR28 and 29 at the appropriate level for maximum output.

TR28 and 29 are neutralised by C25 and 26, while RV57 and CV28 provide high-frequency compensation. Part of the output at the collectors is taken to the trigger selector switch to provide internal triggering.

RV66 controls current through the trace rotation coil L21; reversal of current and range of adjustment is accomplished by reversing the connecting plug.

The 500mVp-p squarewave calibrator output is developed across R61 by using an output from the power transformer to switch D24 alternately on and off. D24 is in series with the divider chain RV56, R58 and 61 between the −6·2V line and chassis; RV56 is used to set the current through the chain and consequently the voltage developed across R61.

N21 serves as the power-on indicator as well as providing a stabilised positive supply for the shift circuit.

TRIGGER CIRCUIT — Figure 3

The bases of input amplifiers TR101 and 102 are fed with the triggering signal via switches S101e and d. S101e selects the source, either the vertical amplifier for internal operation or the EXT TRIG terminal, while S101d determines the slope on which triggering occurs.

When switched in by S102, RV115, the TRIG LEVEL control, varies the base potentials of TR101 and 102 in anti-phase. This alters the quiescent voltage on the base of TR103 and so varies the d.c. level of signal necessary to trip the Schmitt trigger formed by TR103 and 104.

www.TheValvePage.Com

With S102 switched to AUTO, feedback is applied from TR104 collector to TR102 base via R124 and 122 and from TR103 collector to TR101 base via R125 and 106. This causes TR101 and 102 to oscillate at a frequency in the order of 50Hz determined by C108, R124 and 125. The amplitude of the free-running output of TR102 is adjusted by the trigger sensitivity pre-set RV132 which adjusts the hysteresis gap of the Schmitt. Set automatic pre-set RV114 is adjusted to take up component inequalities and provide symmetric operation of TR101 and 102.

The feedback networks R108, 109, C104, 105 and R118, 119, C106, 107 extend the frequency response of the amplifier and enable a high input-impedance to be presented to external trigger signals.

With S101a, b and c in the NORMAL position, TR103 and 104 operate as a Schmitt trigger with coupling resistor R131 and speed-up capacitor C111. RV132 adjusts the hysteresis gap or degree of backlash. The fixed-amplitude rectangular-wave output from the collector of TR104 is differentiated by C113 and R137 and the resulting bidirectional pulses applied to series clipper D101 which provides the collector of TR105 in the timebase circuit with positive-going trigger pulses.

In the TV positions of S101a and b, TR103 is converted into a sync separator by R127 being switched out of circuit and C109 being switched across R128 to give a 350ms time constant. TR104 changes into an inverter with decoupling capacitor C114 being switched across R133. In the TV FIELD position the differentiating time-constant of C113 and R137 is increased by the addition of R136.

With S101c in the HF position, R130 is placed in series with RV132 across C112, these components together with TRIG LEVEL determine the frequency at which TR103 and 104 oscillate. The frequency varies from approximately 250kHz to 1MHz.

TIMEBASE — Figures 4 and 5

The sweep generator consists of the Miller run-up stage TR108 with TR107 as a source-follower; TR105 and 106 form the sweep-gating bistable; TR112 drives the para-phase X output stage TR113 and 114, while TR109 and 111 constitute the beam-unblanking amplifier.

In the quiescent condition of the timebase TR105 is off and TR106 on. D105 and 106 are on, holding CT the timing capacitor (selected by S276 2F), discharged between the gate of TR107 and the collector of TR108. TR108 conducts heavily, with its collector clamped by D105 close to chassis potential. TR109 is on, causing g2 of the CRT to be biased negatively to a1, thus deflecting and blanking the electron beam.

When a positive-going trigger pulse is applied to the base of TR106 via D101, C116 and R152, the bistable switches over; TR106 goes off and TR105 on. The collector of TR106 goes negative until clamped by D104 at about chassis potential; D105 and 106 are cut off and current flows into CT through RT (selected by S276 1R) and RV276 to start the sweep.

The gate of TR107 and base of TR108 gradually fall, causing the collector of TR108 to rise and provide the positive-going sweep. The tendency of the gate of TR107 to go negative is limited by the large loop gain giving almost constant current flow into CT.

As the collector of TR108 rises, D103 is turned on and CH, the hold-off capacitor (selected by S276 1F) charges; D102 becomes reverse-biased and cuts off. The rise in voltage across CH is applied to the base of TR105 via R146; at a point determined by the setting of RV149, TR105 and 106 switch over with TR105 off and TR106 on. The sweep ends and the flyback begins.

D106 is turned on and CT discharges through TR106 causing the gate of TR107 and base of TR108 to rise. The collector of TR108 falls linearly, due to a reversal of the Miller action that took place during the sweep until D105 comes on and the flyback ends, the collector of TR108 being clamped by D105 at the same level as at the start of the sweep. During the flyback D103 is turned off and CH starts to discharge, taking the base of TR105 in a negative direction.

A trigger pulse occuring during the hold-off period cannot cause a repetition of the above sweep and flyback cycle until the hold-off capacitor has discharged sufficiently to turn on D102 and clamp the base of TR105 at a potential set by RV142. If this potential is too high, as when the STABILITY control is anti-clockwise, an incoming trigger pulse is of insufficient amplitude to switch over the bistable. If STABILITY is advanced, the base potential of TR105 falls and the bistable can be switched. When STABILITY is advanced still further clockwise, the base of TR105 falls sufficiently to turn off TR105 and cause a recurrent sweep whether or not trigger pulses are applied. RV144 is set to make the hold-off time twice as long as the flyback time in the free-running condition.

TR109 is switched off at the start and on at the end of the sweep as TR105 and 106 change state. D107 clamps the emitter of TR109 at about chassis potential. As the collector of TR109 goes respectively positive and negative, so does g2 of the CRT, by coupling through the emitter-follower TR111; this causes the CRT electron beam to be alternately unblanked and blanked. A fast-edged pulse is available from a tapping on the emitter load of TR111 for probe capacitance compensation.

On EXT X, the beam is unblanked by disconnecting the base of TR105 from D102, this causes the bistable to switch and cut off TR109.

The external horizontal signal is applied via R293 to the gate of TR107, which with TR108 forms an operational amplifier with feedback through R287. RV155 is set to produce zero volts at the input terminal while CV291 compensates for the input capacitance of TR107.

The sawtooth or external X signal at the collector of TR108 is applied via RV159 and R163 to the base of TR112, an operational amplifier, where it is mixed with the shift potential from RV166. D108 limits the negative excursion of the base of TR112. The gain of TR112 is controlled by RV169 in the feedback loop from collector to base.

The output at the collector of TR112 is applied to the base of TR113, which with TR114 drives the X-plates in push-pull. D109 prevents TR113 from bottoming thus reducing hole storage; RV178 sets the mean operating point of the collectors of TR113 and 114 at about half the HT voltage; RV182 balances the currents in the two transistors when there is no potential across RV169.

POWER SUPPLY AND CRT CIRCUIT — Figure 6

Power Supplies

All voltages are derived from the power transformer T401 which has two primary and two secondary windings. The primaries are connected in parallel for operation from 100 - 125V and in series for operation for 200 - 250V. A tapped secondary provides all EHT, HT and LT supplies with the exception of the CRT heater which is separately fed from a 6·3V winding floated at about −1kV.

www.TheValvePage.Com

EHT The positive supply for the CRT PDA helix is obtained from D401 and 403 which form a voltage-doubling circuit with C401, 403 and 404; the supply is filtered by R403 and C406.

The negative supply for the electron gun is provided by D404, 405 and 407 in series; C409, 411 and 412 in series form the reservoir capacitor.

HT D408, acting as a half-wave rectifier, provides the +105V supply for RV300, the Y amplifier and timebase circuits; after decoupling by R170 and C122 (Figure 4) the supply is returned to RV301 and a1 of the CRT.

LT The positive and negative lines are obtained from D406 and D402 respectively. The 13·5V transformer tapping also supplies the scale illumination lamps via RV401 and the calibrator circuit in the Y amplifier via R402. The −12V A line feeds the timebase and trigger; after additional filtering by L452 and C476, the −12V B line feeds the timebase and Y amplifier.

CRT

A 13-centimetre diagonal rectangular tube with helical PDA is used; alternatives to the standard P31 phosphor are available. Beam control is carried out electrostatically with the exception of rotation which is magnetic. The front-panel controls RV305, 303 and 301 adjust for brilliance, focus and astigmatism on g1, a2 and a3 respectively. D301 provides a low-resistance path for cathode current.

The current through the trace rotation coil L21 is adjusted by RV66 (Figure 2); if necessary, the direction of current may be reversed by reversal of the connecting plug.

The beam is unblanked during a sweep and when the timebase is switched to EXT X by raising the potential on g2 to that of a1, at all other times g2 is held negative to a1 deflecting and blanking the beam.

External intensity modulating signals are applied to g1 via C306.

www.TheValvePage.Com

MAINTENANCE AND RECALIBRATION

GENERAL

To ensure the maintenance of full measurement accuracy, vertical amplifier gain and timebase sweep speed should be checked occasionally; the internally generated CAL waveform may be used as follows:

Check Gain With VARIABLE fully clockwise and VOLTS/CM at 100mV link INPUT and CAL and adjust front-panel SET GAIN for a display 5cm in amplitude.

Check Sweep Speed Set X GAIN fully anti-clockwise. TIME/CM to 10ms and VARIABLE fully clockwise. With INPUT and CAL linked, adjust other controls for a locked display.

50Hz supply: Adjust SET SPEED for 1 cycle/2cm.
60Hz supply: Adjust SET SPEED for 3 cycles/5cm.
400Hz supply: Switch TIME/CM to 1ms and adjust SET SPEED for 2 cycles/5cm.

If faulty operation is suspected, it is first advisable to check the instrument's performance with controls set as listed in the First-time Operation section.

The procedures that follow in the Recalibration section enable individual preset controls to be correctly set. Regard should be paid to control settings in earlier steps and the possibility of interaction of adjustments with the performance of other circuits.

MECHANICAL

Location of Preset Controls Attenuator trimmers are accessible through holes at the left-hand front of the base of the S54A. CV283 and CV291 are mounted on the TIME/CM switch assembly and are accessible after removing the cover to the front of the base; the 0·2μs/cm timing trimmer CV283 is supported between the timing switch wafers. The remainder of the preset controls are mounted on the PC70A circuit board and are accessible when the right-hand cabinet side is removed.

Access to Interior To remove the cabinet sides, loosen the two screws securing the carrying-handle clamps, slide the tops of the sides outwards and unhook the bottoms of the sides from the slots in the chassis base. The rear cover is secured by a screw at each corner.

CRT Removal and Replacement

Disconnect instrument from supply.

Remove both cabinet sides and the rear cover.

Protect eyes in case of tube implosion.

Disconnect mumetal screen earthing lead from power transformer.

Unplug CRT base socket.

Unplug trace rotation coil plug from PC70A circuit board.

Remove circular gun-shield clamp to rear of chassis.

Support the front end and slide the CRT assembly rearwards.

Swing front of assembly outwards and remove PDA connector from underside of tube.

Withdraw assembly forwards.

Removing tape as necessary, slide off mumetal screen, gun-shield and trace rotation coil.

Replacement is a reversal of the above procedure. If the range of the TRACE ROTATION control is inadequate to level the trace, reverse the trace rotation coil plug in the PC70A board.

PROBE

Waveform Required 0·5Vp-p 1kHz squarewave or step waveform from PROBE TEST front-panel outlet.

Compensation With VOLTS/CM at 10mV connect x10 probe to INPUT socket and apply tip to squarewave generator output or PROBE TEST. If the squarewave is used, adjust controls to display a few cycles of the waveform and adjust the probe trimmer for square corners. If using the step waveform from PROBE TEST, set TIME/CM to 1ms and adjust probe trimmer for optimum squareness, that is for the starting point of the sweep to be level with the rest of the trace.

The HZ1B probe is adjustable through a hole in the probe body

The GE81000 probe trimmer is located at the oscilloscope end of the probe lead. Slacken the narrower of the two knurled rings and rotate the adjacent broader ring until correct compensation is obtained. Tighten the narrower ring without disturbing the setting of the broader ring.

ATTENUATOR

Waveform Required 1kHz squarewave adjustable between 0·1 and 5Vp-p or 50Vp-p with probe.

Compensation Set VARIABLE fully clockwise and adjust the relevant trimmer for square corner with VOLTS/CM settings and input signal levels as undernoted:

VOLTS/CM	*Squarewave Vp-p*	*Adjust*
20mV	·1	CV14
50mV	·25	CV11
·1	·5	CV7
·2	1	CV12
5	2·5	CV8
1	5	CV4

If a x10 probe is available, apply the tip of the correctly compensated probe to the squarewave source and adjust trimmers as before with the following conditions:

VOLTS/CM	*Squarewave Vp-p*	*Adjust*
·1	5	CV5
1	50	CV2

The following table shows the location of each trimmer as viewed from beneath the instrument; the sequence of adjustment and VOLTS/CM switch settings are also indicated:

	Left			*Right*		
Front	(8)	CV2	1V probe	(6)	CV4	1V
	(3)	CV7	·1V	(7)	CV5	·1V probe
	(1)	CV14	20mV	(4)	CV12	·2V
Rear	(2)	CV11	50mV	(5)	CV8	·5V

www.TheValvePage.Com

VERTICAL AMPLIFIER

Equipment Required 20 kilohms/volt or higher resistance voltmeter to measure approximately 105V. 1kHz squarewave generator giving 50 and 500mVp-p. 1MHz squarewave generator with matching termination to give about 30mVp-p.

Mean Y plate Potential RV52 Set VARIABLE fully clockwise, Y SHIFT and VERNIER to mid-position, TIME/CM to EXT X and centre spot with Shift Balance RV37 and X SHIFT controls.

(a) Connect voltmeter between collectors of TR28 and 29 and adjust Y SHIFT or VERNIER for 0V.

(b) Measure and note voltage of +105V line; this voltage should be measured at the junction of R405 and C415.

(c) Connect voltmeter, on same range as used for (b), between either TR28 or 29 collector and chassis and adjust RV52 for half the +105V line voltage plus 2·5V (nominally 105/2+2·5 =55V).

(d) Repeat (a), (b) and (c) until correct adjustment is obtained.

Variable Gain Balance RV26 Adjust RV26 for no spot movement as VARIABLE is turned over its full range. Recentre spot if necessary with RV37 *not* Y SHIFT or VERNIER.

Y Balance RV73 Adjust RV73 for no spot movement as R461 is shorted-out; R461 is located about 10cm from the front and 4cm from the bottom of the PC70A circuit board, adjacent to RV56. Recheck the setting of RV26 as in the previous step; again RV37 and not Y SHIFT should be used to recentre the spot.

Set Gain RV39 Set VOLTS/CM to 10mV, VARIABLE fully clockwise and DC-AC switch to DC. Feed in a 50mVp-p 1kHz squarewave and adjust other controls for a locked display. Adjust front-panel SET GAIN for 5cm deflection.

Input Capacitance CV21 Increase squarewave amplitude to 100mVp-p and set VARIABLE fully anti-clockwise. Adjust CV21 for best corner on squarewave.

Thermal Compensation RV41 With 100mV squarewave, VARIABLE anti-clockwise and DC-AC at DC, adjust RV41 to give a flat top to the squarewave.

Recheck Input Capacitance CV21 and Mean Y plate Potential RV52 as in earlier steps.

Input Stage Neutralising (WIRE) Set VARIABLE fully clockwise and reduce input to 50mV. If the displayed waveform has undershoot, bend the neutralising wire towards R50; if there is overshoot, bend the wire away from R50.

Recheck the setting of CV21 with VARIABLE fully clockwise and adjust CV21 to provide no change in shape of waveform as VARIABLE is turned throughout its range.

Recheck the setting of SET GAIN as in earlier step.

HF Compensation CV28 and RV57 Feed in 30mV 1MHz squarewave via termination with VOLTS/CM set to 10mV. Adjust CV28 and RV57 to provide the sharpest possible corner.

Set Calibrator RV56 The 500mVp-p squarewave generator used in this step must be accurate to within ±2%. Set VOLTS/CM to 100mV and VARIABLE fully clockwise, feed in 500mV squarewave and adjust SET GAIN for precisely 5cm of display. Remove squarewave and link CAL 500mVp-p to INPUT. Adjust RV56 for precisely 5cm of display.

TRIGGER

Equipment Required Test oscilloscope to measure 0·1V at about 10ms/cm.

Trigger Sensitivity and Set Automatic RV132 and 114 With no input, switch TRIG LEVEL to AUTO, turn STABILITY fully anti-clockwise, switch to EXT TRIG (lowest button out) and short EXT TRIG terminal to chassis.

Set the test oscilloscope to 0·1V/cm a.c. coupled and 10ms/cm.

Inspect the waveform at the base of TR103 (this is the same point as the right-hand end of R119 and the left-hand ends of R117 and 126). Adjust RV132 for amplitude and RV114 for symmetry to produce a symmetrical 0·1Vp-p triangular waveform.

The settings of RV114 and 132 are critical, so in the case of serious maladjustment, carry out the following procedure:—

Set RV114 to mid-position and RV132 fully anti-clockwise. Adjust RV114 to the centre of the range over which either a triangular waveform or a continuous HF oscillation is obtained; if the latter, gradually adjust RV132 to the point where the oscillation is replaced by a triangular waveform. If the triangular waveform is not obtained, repeat the above with a different setting of RV114. Finally adjust RV114 and 132 for a symmetrical triangular waveform 0·1V in amplitude.

SWEEP GENERATOR

Equipment and Waveform Required Test oscilloscope to measure 36V at about 1ms/cm. 10kHz squarewave or 0·1ms markers. 1MHz squarewave or 1μs markers. The squarewave or marker frequencies should be crystal controlled.

Hold-off Time and Trace Length RV144 and 149 With no vertical input, set TIME/CM to 0·5ms, VARIABLE and TRIG LEVEL fully clockwise, X GAIN and RV144 fully anti-clockwise and STABILITY about 45 degrees from fully clockwise.

Set the test oscilloscope to 10V/cm and 1ms/cm.

Inspect the waveform at the SAWTOOTH OUT terminal and turn RV144 clockwise until the timebase just starts. Set the amplitude of the sawtooth to about 36V with RV149.

If the waiting time (horizontal element of display) is less than a quarter of the flyback time (negative-going slope of display), turn STABILITY fully clockwise and set waiting time to equal a quarter of the flyback time with RV144.

If the waiting time is greater than the flyback time, turn RV144 clockwise until the times are equal.

Check that there is waiting time on the 50μs, 5ms and 50ms positions of the TIME/CM switch; if not, readjust RV144.

Set Speed 0·2ms and Trace Length SET SPEED AND RV149 With X GAIN fully anti-clockwise and VARIABLE fully clockwise, set TIME/CM to 0·2ms and apply a 10kHz squarewave or 0·1ms markers to vertical INPUT. Adjust amplitude and VOLTS/CM for about 3cm of display.

Adjust SET SPEED for 2 cycles or markers/cm over the centre 8cm of graticule divisions; timing over the first and last centimetre should be ignored.

Adjust RV149 for about 11cm of trace length.

www.TheValvePage.Com

Set Speed 0·2μs CV283. With X GAIN fully anti-clockwise and VARIABLE fully clockwise, set TIME/CM to 0·2μs and apply 1MHz squarewave or 1μs markers to vertical INPUT. Adjust CV283 for 1 cycle or marker/5cm, between the 3rd and 8th vertical graticule divisions. CV283 is mounted between the TIME/CM switch wafers.

HORIZONTAL AMPLIFIER

Equipment and Waveforms Required 20 kilohms/volt or higher resistance voltmeter to measure approximately 105V. 10kHz squarewave of about 2·5Vp-p.

Mean X plate Potential RV178 Set TIME/CM to EXT X, VARIABLE fully clockwise, X GAIN fully anti-clockwise and centre spot with Y SHIFT.

(a) Connect voltmeter between collectors of TR113 and 114 and adjust X SHIFT for 0V.

(b) Measure and note voltage of +105V line.

(c) Connect voltmeter, on same range as +105V line measurement, between TR114 collector and chassis and adjust RV178 for half the +105V line voltage plus 2·5V (nominally, 105/2 + 2·5 = 55V).

(d) Repeat (a), (b) and (c) until correct adjustment is obtained.

X d.c. Balance RV182 Centre spot with X SHIFT and adjust RV182 so that no spot movement results when rotating X GAIN between its limits.

Check and if necessary adjust mean X plate potential as in previous step.

EXT X d.c. Balance RV155 Turn X GAIN fully clockwise and adjust RV155 for no spot movement when EXT X terminal is shorted to chassis.

EXT X Input Compensation CV291 With no Y input, turn X GAIN fully clockwise and apply a 2·5V 10kHz squarewave between the EXT X and chassis terminals.

Adjust CV291 for no undershoot or overshoot, i.e., for intensified spots of minimum dimensions at each end of the trace.

CATHODE RAY TUBE

Inter-plate Shield Potential RV300 Set TIME/CM to 0·5ms and STABILITY fully clockwise. Centre trace with shift controls and adjust TRACE ROTATION for alignment of trace with graticule.

Adjust RV300 for minimum curvature of the trace when positioned to the top and bottom of the screen.

www.TheValvePage.Com

COMPONENTS LIST

Except for C32, 33, 34, 122, RV66, 115, 142, 301, 303, 305, 401 and S1, 102, 402, the S54A and S54AR use the same components. Circuit references suffixed with the letter R denote parts used in the S54AR only.

All resistor and capacitor values are in ohms and microfarads unless otherwise stated; ratings in watts and volts respectively are at 70°C.

Carbon resistors are 10% and ¼W unless otherwise shown.

Whenever possible exact replacements for components should be used; these may be ordered from the company or its agents stating:

1. Instrument type
2. Instrument serial number
3. Component circuit reference
4. Component part number
5. Component value

Locally available alternatives may be satisfactory for standard components.

ABBREVIATIONS

C	Carbon
CER	Ceramic
CM	Cermet thick-film
CP	Carbon preset
CT	Ceramic trimmer
CV	Carbon variable
E	Electrolytic
Ge	Germanium
HS	High-stability carbon
MO	Metal oxide
PC	Polycarbonate
PE	Polyester
PS	Polystyrene
Se	Selenium
Si	Silicon
SM	Silver mica
WWP	Wire-wound preset
WWV	Wire-wound variable

www.TheValvePage.Com

Cct. ref.	Part number	Value	Description	Tol. %	Rating	
C1	285-0772-00	0·1	PE	10	400	
CV2	281-0145-00	6-25p	CT		500	
C3	285-0810-00	820p	PS	5	125	
CV4	281-0136-00	3-10p	CT		500	
CV5	281-0145-00	6-25p	CT		500	
C6	285-0869-00	47p	PS	2p	350	
CV7	281-0136-00	3-10p	CT		500	
CV8	281-0145-00	6-25p	CT		500	
C9	285-0842-00	15p	PS	1p	350	
CV11	281-0136-00	3-10p	CT		500	
CV12	281-0145-00	6-25p	CT		500	
C13	283-0653-00	5p	SM	½p	350	
CV14	281-0145-00	6-25p	CT		500	
C20	281-0705-00	1p	CER	0·1p	500	
CV21	281-0132-00	10-40p	CT		500	
C22	285-0786-00	33p	PS	2p	350	
C23	285-0779-00	0·47	PE	20	100	880
C24	285-0874-00	470p	PS	5	125	
C25	281-0676-00	2·2p	CER	0·1p	500	
C26	281-0676-00	2·2p	CER	0·1p	500	
C27	285-0845-00	68p	PS	2p	350	1278
CV28	281-0134-00	10-60p	CT		500	
C29	290-0625-00	4.7	E		160	1298
C30	285-0760-00	330p	PS	5	125	
C31	285-0760-00	330p	PS	5	125	
C32	285-0869-00	47p	PS	2p	350	
C32R	285-0867-00	20p	PS	1p	350	
C33R	290-0623-00	4.7	E		25	
C34R	290-0623-00	4.7	E		25	1367
C101	285-0772-00	0·1	PE	10	400	
C102	285-0779-00	0·47	PE	20	100	
C103	285-0779-00	0·47	PE	20	100	
C104	285-0906-00	0·015	PE	20	250	
C105	281-0678-00	3p	CER	0·1p	500	
C106	281-0678-00	3p	CER	0·1p	500	
C107	285-0906-00	0·015	PE	20	250	
C108	285-0779-00	0·47	PE	20	400	
C109	290-0353-00	16	E		32	
C111	285-0854-00	100p	PS	2p	350	
C112	285-0850-00	1,000p	PS	5	125	
C113	285-0854-00	100p	PS	2p	350	
C114	290-0661-00	100	E		16	1531
C116	281-0712-00	5p	CER	¼p	750	
C117	281-0712-00	5p	CER	¼p	750	
C118	285-0867-00	20p	PS	1p	350	
C119	285-0873-00	200p	PS	5	350	
C120	285-0783-00	2,200p	PE	20	400	
C121	285-0874-00	470p	PS	5	125	
C122	285-0796-00	0·1	PE	20	250	
C122R	285-0788-00	0·1	PE	10	125	
C123	281-0696-00	0·75p	CER	0·1p	500	
C124	285-0842-00	15p	PS	1p	350	
C276	285-0874-00	470p	PS	5	125	
C277	285-0769-00	0·01	PE	20	400	
C278	285-0792-00	4,700p	PE	20	125	

*On S54AR C27 is 285-0854-00 100p

www.TheValvePage.Com

	Cct. ref.	Part number	Value	Description	Tol. %	Rating
727	C279	285-1032-00	0·047	PE	20	160
	C280	285-0791-00	0·47	PE	10	125
	C281	285-0869-00	47p	PS	2p	350
658						
	CV283	281-0137-00	6-30p	CT		350
	C284	285-0762-00	450p	PS	1	125
	C285	285-0770-00	4,700p	PS	1	125
	C286	285-0926-00	0·047	PS	1	63
747	C287	285-0927-00	0·47	PC	1	63
	C288	285-0928-00	4·7	PC	1	63
	C289	285-0884-00	29p	PS	1p	350
	CV291	281-0137-00	6-30p	CT		350
	C301	285-0796-00	0·1	PE	20	250
	C302	285-0796-00	0·1	PE	20	250
	C303	285-0773-00	0·1	PE	20	400
	C304	285-0843-00	30p	PS	2p	350
	C305	285-0796-00	0·1	PE	20	250
	C306	281-0677-00	0·01	CER		1·5k
959	*C307	285-0788-00	100n	PE	10	125
	C401	281-0682-00	0·02	CER		2k
	C402a	290-0384-00	1,000	E		18
	b		1,000	E		18
	C403	281-0681-00	0·01	CER		4k
	C404	281-0681-00	0·01	CER		4k
	C406	281-0681-00	0·01	CER		4k
	C407	285-0796-00	0·1	PE	20	250
1314 1316	C408	290 0552-00	680	E		16
	C409	290-0364-00	16	E		450
	C411	290-0364-00	16	E		450
	C412	290-0364-00	16	E		450
	C414	290-0400-00	280	E		150
	C415	290-0400-00	280	E		150
	C470	290-0554 00	470	E		16
1431 1432	C474	290-0554-00	470	E		16
	C475	290-0377-00	1,000	E		16
	C476	290-0377-00	1,000	E		16
1366 1367	C478	290-0623-00	4.7	E		25
	CRT	154-0542-00		D13-47GH (standard)		
		154-0560-00		D13-47GM		
		154-0561-00		D13-47BE		
	D21	152-0348-00	6·2V	Si zener	5	0·33W
	D22	152-0062-01		1N914 Si		
	D23	152-0062-01		1N914 Si		
	D24	152-0062-01		1N914 Si		
	D25	152-0062-01		1N914 Si		
	D26	152-0062-01		1N914 Si		
	D101	152-0062-01		1N914 Si		
	D102	152-0062-01		1N914 Si		
	D103	152-0062-01		1N914 Si		
	D104	152-0062-01		1N914 Si		
	D105	152-0370-00		AAY30 Ge		
	D106	152-0343-00		1N914T Si		
	D107	152-0062-01		1N914 Si		
	D108	152-0370-00		AAY30 Ge		

* Used on S54AR Instrument only

www.TheValvePage.Com

	Cct. ref.	Part number	Value	Description	%	Tol. Rating
	D109	152-0062-01		1N914 Si		
	D301	152-0344-00	100V	Si zener	5	0·33W
	D401	152-0374-00	3·4kV	Se rectifier		0·6mA
	D402	152-0339-00	50V	Si rectifier		0·5A
	D403	152-0374-00	3·4kV	Se rectifier		0·6mA
	D404	152-0352-00	800V	Si rectifier		0·2A
	D405	152-0352-00	800V	Si rectifier		0·2A
	D406	152-0339-00	50V	Si rectifier		0·5A
	D407	152-0352-00	800V	Si rectifier		0·2A
	D408	152-0341-00	450V	Si rectifier		0·5A
	F401	159-0077-00	0·25A	1¼in delay 200-250V		
		159-0079-00	0·5A	1¼in delay 100-125V		
	FB101	276-0597-00		Ferrite bead FX1115 Mullard		
	FB102	276-0597-00		Ferrite bead FX1115 Mullard		
	L21	108-0503-01	980Ω	Trace rotation coil (2,400 turns)		
	L452	108-0482-00	160μH	Fixed inductor		
	LP401	150-0095-00	14V	LES		0·75W
		150-0081-00	14V	Capless (early S54As)		0·75W
	LP402	150-0095-00	14V	LES		0·75W
		150-0081-00	14V	Capless (early S54As)		0·75W
	N21	150-0105-00	60V	Neon HIVAC 34L		
	R1	310-0678-00	10·1k	CM	1	¼
	R2		990k			
	R3	310-0679-00	111k	CM	1	¼
	R4		900k			
	R5	310-0680-00	250k	CM	1	¼
	R6		800k			
	R7		1M			
	R8		500k			
	R21	310-0679-00	111k	CM	1	¼
	R22		900k			
	R23	319-0136-00	680	HS	1	¼
	R24	316-0681-01	680	C		
1474	RV25	311-0899 01	5k	CV inverse semi-log.	20	0·125
	RV26	311-0717-00	220	CP	20	¼
	R27	316-0561-01	560	C		
	R28	319-0136-00	680	HS	1	¼
	R29	316-0681-01	680	C		
	R30	316-0105-01	1M	C		
	R31	316-0272-01	2·7k	C		
	R32	316-0101-01	100	C		
	R33	321-0824-48	330	MF	1	0·125
	R34	316-0821-01	820	C		
	R35	316-0152-01	1·5k	C		
	R36	316-0823-01	82k	C		
	RV37	311-0801-00	470k	CP	20	¼
	R38	316-0105-01	1M	C		
	RV39	311-0915-00	100	CP	20	¼

www.TheValvePage.Com

	Cct. ref.	Part number	Value	Description	Tol. %	Rating
	R40	316-0154-01	150k	C		
	RV41	311-0719-00	470	CP	20	¼
	RV42	311-0898-00	500k	CV (with RV51)	20	¼
	R43	316-0105-01	1M	C		
	R44	316-0475-01	4·7M	C		
	R45	303-0332-01	3·3k	C	5	1
	R46	321-0824-48	330	MF	1	0·125
	R47	316-0821-01	820	C		
	R48	316-0106-01	10M	C		
	R49	316-0152-01	1·5k	C		
	R50	316-0101-01	100	C		
	RV51	311-0898-00	500k	CV (with RV42)	20	¼
	RV52	311-0798-00	2·2k	CP	20	¼
	R53	316-0331-01	330	C		
	R54	303-0202-01	2k	C	5	1
	R55	321-0641-48	1·8k	MF	1	0·125
608	RV56	311-0735-00	10k	CP	20	¼
	RV57	311-0717-00	220	CP	20	¼
608	R58	321-1313-48	18k	MF	1	⅛
	R59	316-0331-01	330	C		
	R60	316-0182-01	1·8k	C		
608	R61	321-0844-48	2·2k	MF	1	⅛
	R62	316-0331-01	330	C		
	R63	303-0202-01	2k	C	5	1
	R64	321-0641-48	1·8k	MF	1	0·125
902	R65	316-0681-01	680	C		
1522	RV66	311-0727-00	1k	CP	20	1
	RV66R	311-1014-00	1k	WWP	20	1·6
902						
902	R68	316-0681-01	680k	C		
	R69	316-0474-01	470k	C		
	R70	316-0182-01	1·8k	C		
	R71	316-0331-01	330	C		
	R72	316-0473-01	47k	C		
	RV73	311-0895-00	150	CP	20	¼
	R74	316-0684-01	680k	C		
	R101	316-0104-01	100k	C		
	R102	316-0183-01	18k	C		
	R103	316-0183-01	18k	C		
	R104	316-0392-01	3·9k	C		
	R105	316-0333-01	33k	C		
	R106	316-0273-01	27k	C		
	R107	316-0223-01	22k	C		
	R108	316-0823-01	82k	C		
	R109	316-0184-01	180k	C		
	R111	316-0272-01	2·7k	C		
	R112	316-0183-01	18k	C		
	R113	316-0272-01	2·7k	C		
	RV114	311-0850-00	15k	CP	20	¼
	RV115	311-0897-00	10k	CV (with RV142 and S102)	20	¼
	RV115R	311-1015-00	10k	CV (with RV142R and S102R)	20	¼
	R116	316-0183-01	18k	C		
	R117	316-0272-01	2·7k	C		
	R118	316-0184-01	180k	C		

www.TheValvePage.Com

	Cct. ref.	Part number	Value	Description	Tol. %	Rating
	R119	316-0823-01	82k	C		
	R121	316-0333-01	33k	C		
	R122	316-0273-01	27k	C		
	R123	316-0223-01	22k	C		
	R124	316-0224-01	220k	C		
	R125	316-0154-01	150k	C		
	R126	316-0393-01	39k	C		
	R127	316-0272-01	2·7k	C		
	R128	316-0223-01	22k	C		
	R129	316-0271-01	270	C		
	R130	316-0392-01	3.9k	C		
	R131	316-0222-01	2·2k	C		
	RV132	311-0717-00	220	CP	20	¼
	R133	316-0682-01	6·8k	C		
	R134	316-0471-01	470	C		
	R135	316-0103-01	10k	C		
	R136	316-0224-01	220k	C		
	R137	316-0222-01	2·2k	C		
	R138	316-0335-01	3·3M	C		
	R141	316-0124-01	120k	C		
	RV142	311-0897-00	25k	CV (with RV115 and S102)	20	¼
	RV142R	311-1015-00	25k	CV (with RV115R and S102R)	20	¼
	R143	316-0273-01	27k	C		
	RV144	311-0850-00	15k	CP	20	¼
	R145	315-0243-02	24k	C	5	¼
	R146	316-0224-01	220k	C		
	R147	316-0183-01	18k	C		
	R148	316-0821-01	820	C		
	RV149	311-0896-00	3·3k	CP	20	¼
	R150	316-0101-01	100	C		
	R151	316-0122-01	1·2k	C		
	R152	316-0103-01	10k	C		
	R153	316-0103-01	10k	C		
	R154	316-0682-01	6·8k	C		
	RV155	311-0719-00	470	CP	20	¼
	R156	316-0272-01	2·7k	C		
	R157	303-0153-01	15k	C	5	1
	R158	316-0331-01	330	C		
	RV159	311-0986-00	10k	CP	20	0·1
	R161	303-0123-01	12k	C	5	1
	R162	315-0182-01	1·8k	C	5	¼
	R163	316-0153-00	15k	C		
	R164	303-0103-01	10k	C	5	1
	R165	316-0101-01	100	C		
1442) 1443)	RV166	311-1677-00	5k	CV (with RV169)	20	⅛
	R167	315-0393-02	39k	C	5	¼
	R168	315-0472-02	4·7k	C	5	¼
1442) 1443)	RV169	311-1677-01	5k	CV Inv. semi-log. (with RV166)	20	¼
	R170	316-0100-01	10	C		
	R171	316-0152-01	1·5k	C		
	R172	316-0152-01	1·5k	C		
	R173	321-1200-48	1·2k	MF	1	⅛
	R174	315-0183-01	18k	C	5	¼
	R175	307-0143-00	5·6k	MO	5	1½

www.TheValvePage.Com

	Cct. ref.	Part number	Value	Description	Tol. %	Rating
1260	R176	321-1104-48	120	MF	1	½
	R177	316-0561-01	560	C		
	RV178	311-0717-00	220	CP	20	¼
	R179	307-0143-00	5·6k	MO	5	1½
	R181	316-0103-01	10k	C		
	RV182	311-0851-00	1k	CP	20	¼
	R183	316-0391-01	390	C		
1474	RV276	311-0853-01	50k	CV	20	¼
	R277	316-0823-01	82k	C		
	R278	310-0698-00	750k	CM	1	¼
	R279	310-0698-00	375k	CM	1	¼
	R281	310-0698-00	225k	CM	1	¼
	R282	310-0698-00	75k	CM	1	¼
	R283	310-0698-00	37·5k	CM	1	¼
	R284	310-0699-00	24k	CM	5	¼
658	R285	310-0699-00	7·5k	CM	5	¼
	R286	310-0699-00	2·2k	CM		
	R287	316-0125-01	1·2M	C		
	R288	310-0699-00	1k	CM		
	R289	316-0684-01	680k	C		
	R291	310-0699-00	36k	CM	5	¼
	R292	310-0698-00	37·5k	CM	1	¼
	R293	316-0105-01	1M	C		
	RV300	311-0765-00	100k	CP	20	¼
	R301	311-0854-00	100k	CV	20	0·1
	RV301R	311-0907-00	100k	CV	20	¼
	R302	316-0155-01	1·5M	C		
	RV303	311-0914-00	1M	CV (with S402)	20	¼
	RV305		1M	CV	20	¼
	RV303R	311-1113-00	1M	CV	20	¼
	R304	316-0334-01	330k	C		
	RV305R	311-1020-00	1M	CV (with S402R)	20	¼
	R306	316-0334-01	330k	C		
	R307	316-0105-01	1M	C		
	R308	316-0106-01	10M	C		
1522	RV401	311-0856-00	100	CP	20	1
	RV401R	311-1011-00	100	WWV	20	1·6
608	R402	316-0472-01	4·7k	C	5	½
	R403	316-0684-01	680k	C		
	R404	316-0470-01	47	C		
	R405	303-0181-01	180	C	5	1
	R459	316-0680-01	68	C		
	R461	316-0220-01	22	C		
	R463	316-0121-01	120	C		

S1	260-1082-00	Slide (2-position)
S1R	260-1136-00	Slide (3-position)
S2	260-1051-01	Rotary (12-position)
S101	260-0994-00	Push (5-button)
S102	311-0897-00	Rotary (with RV115 and 142)
S102R	311-1015-00	Rotary (with RV115R and 142R)
S276	260-1074-00	Rotary (23-position)
S402	311-0914-00	Rotary (with RV303 and 305)
S402R	311-1020-00	Rotary (with RV305R)

www.TheValvePage.Com

Cct. ref.	Part number	Description		
T401	120-0593-00	Power transformer		
TR21 } TR22 }	151-1051-01	2BFW1051	Mullard	Si
TR23	151-0127-02	BSX20/2N2369	Mullard	Si
TR24	151-0127-02	BSX20/2N2369	Mullard	Si
TR25	151-0242-00	SPS2506	Motorola	Si
TR26	151-0242-00	SPS2506	Motorola	Si
TR27	151-0127-02	BSX20/2N2369	Mullard	Si
TR28	151-0242-00	SPS2506	Motorola	Si
TR29	151-0242-00	SPS2506	Motorola	Si
TR101	151-0320-00	MPS6518	Motorola	Si
TR102	151-0320-00	MPS6518	Motorola	Si
TR103	151-0320-00	MPS6518	Motorola	Si
TR104	151-0320-00	MPS6518	Motorola	Si
TR105	151-0320-00	MPS6518	Motorola	Si
TR106	151-0320-00	MPS6518	Motorola	Si
TR107	151-1052-00	BFW1052	Mullard	Si
TR108	151-0242-00	SPS2506	Motorola	Si
TR109	151-0525-00	SPS5286		Si
TR111	151-0525-00	SPS5286		Si
TR112	151-0127-02	BSX20/2N2369	Mullard	Si
TR113	151-0525-00	SPS5286		Si
TR114	151-0525-00	SPS5286		Si

ACCESSORIES

Description	S54A Qty.	S54A Part number	S54AR Qty.	S54AR Part number
Carton, packing	1	004-0730-00	1	004-0740-00
Manual	1	070-0962-01	1	same

www.TheValvePage.Com

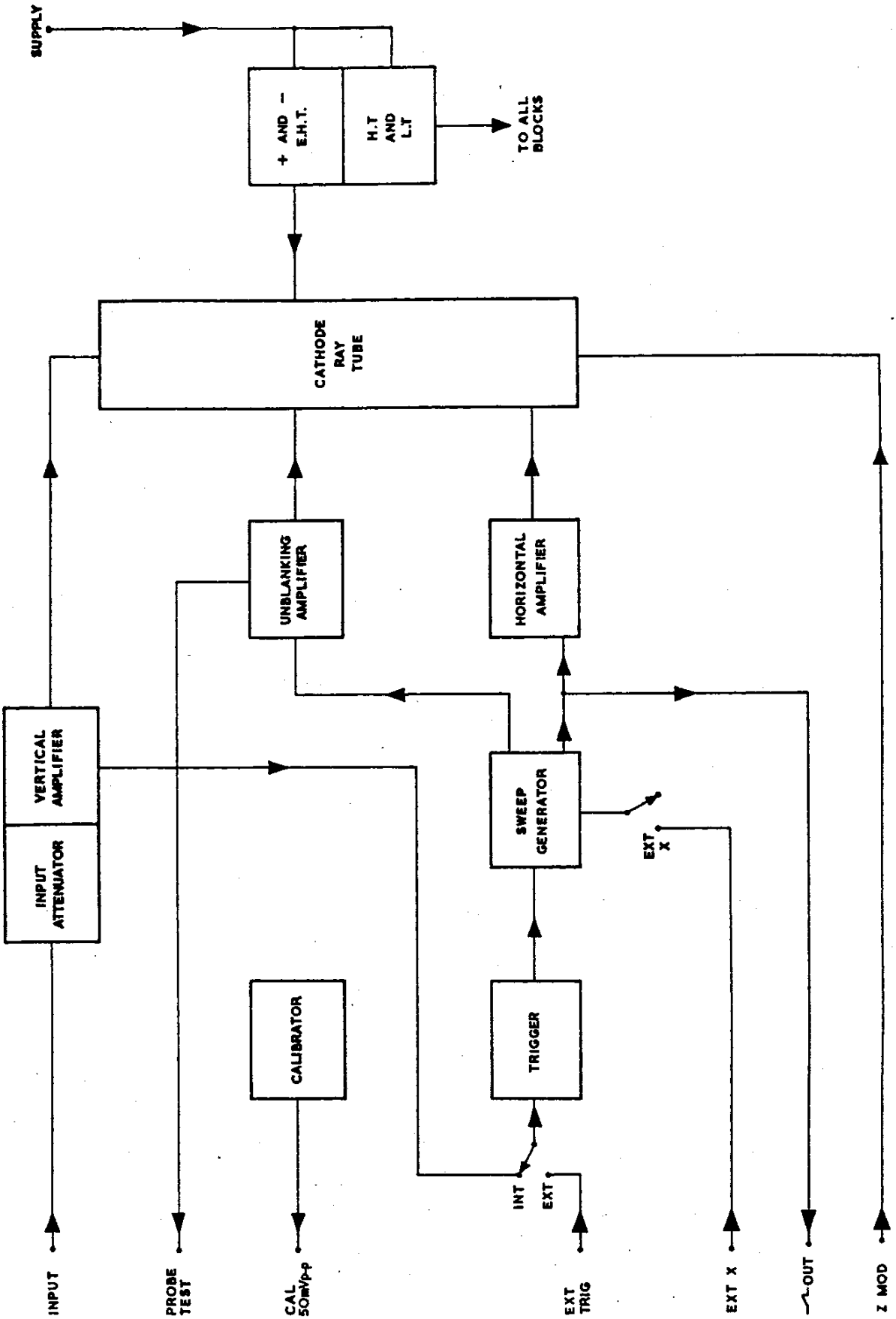

FIGURE A

BLOCK DIAGRAM

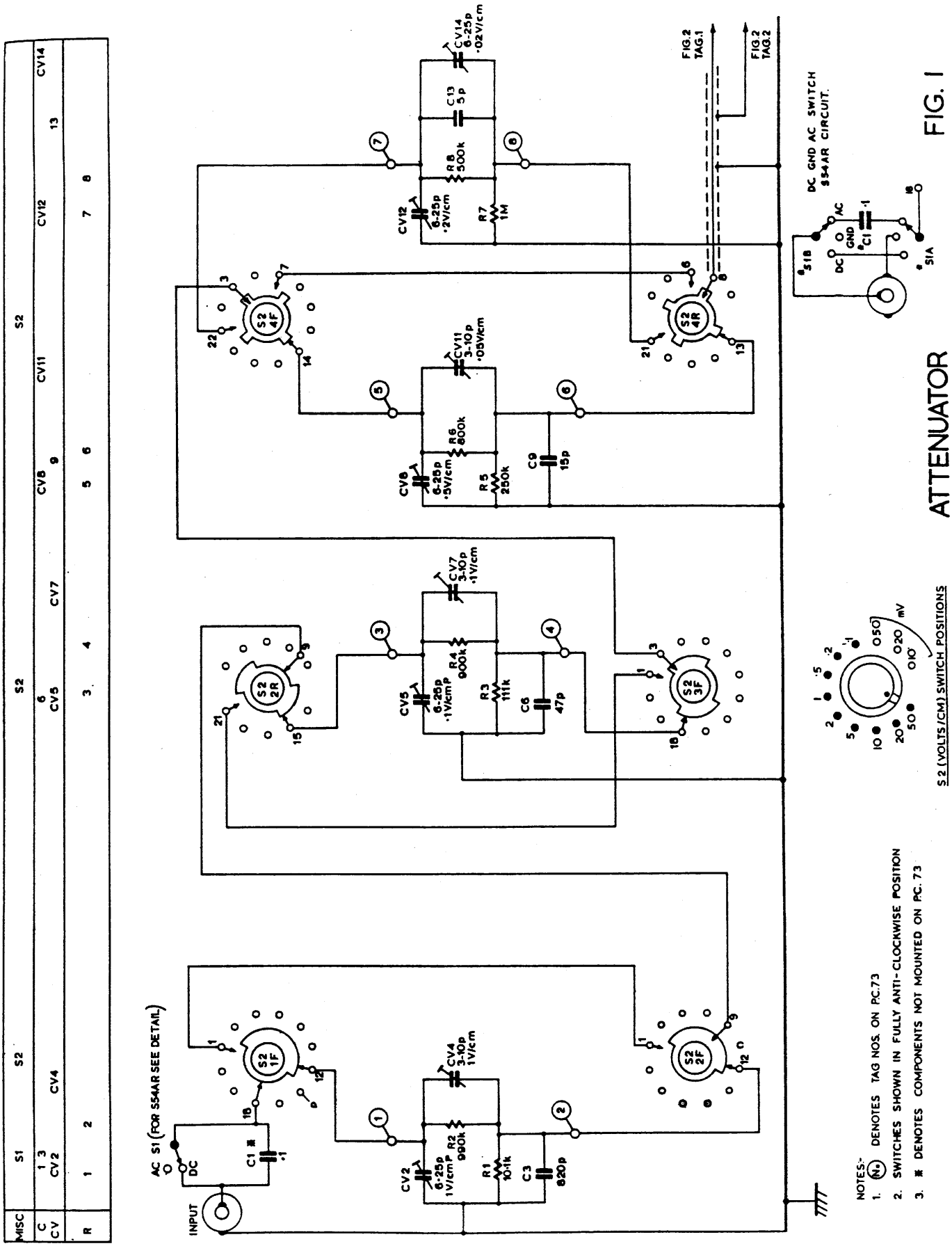
ATTENUATOR
FIG. 1
INPUT
AC S1 (FOR S54AR SEE DETAIL)
DC GND AC SWITCH S54AR CIRCUIT.
S2 (VOLTS/CM) SWITCH POSITIONS
FIG.2 TAG.1
FIG.2 TAG.2
NOTES:-
1. (N) DENOTES TAG NOS. ON P.C.73
2. SWITCHES SHOWN IN FULLY ANTI-CLOCKWISE POSITION
3. ✱ DENOTES COMPONENTS NOT MOUNTED ON P.C. 73

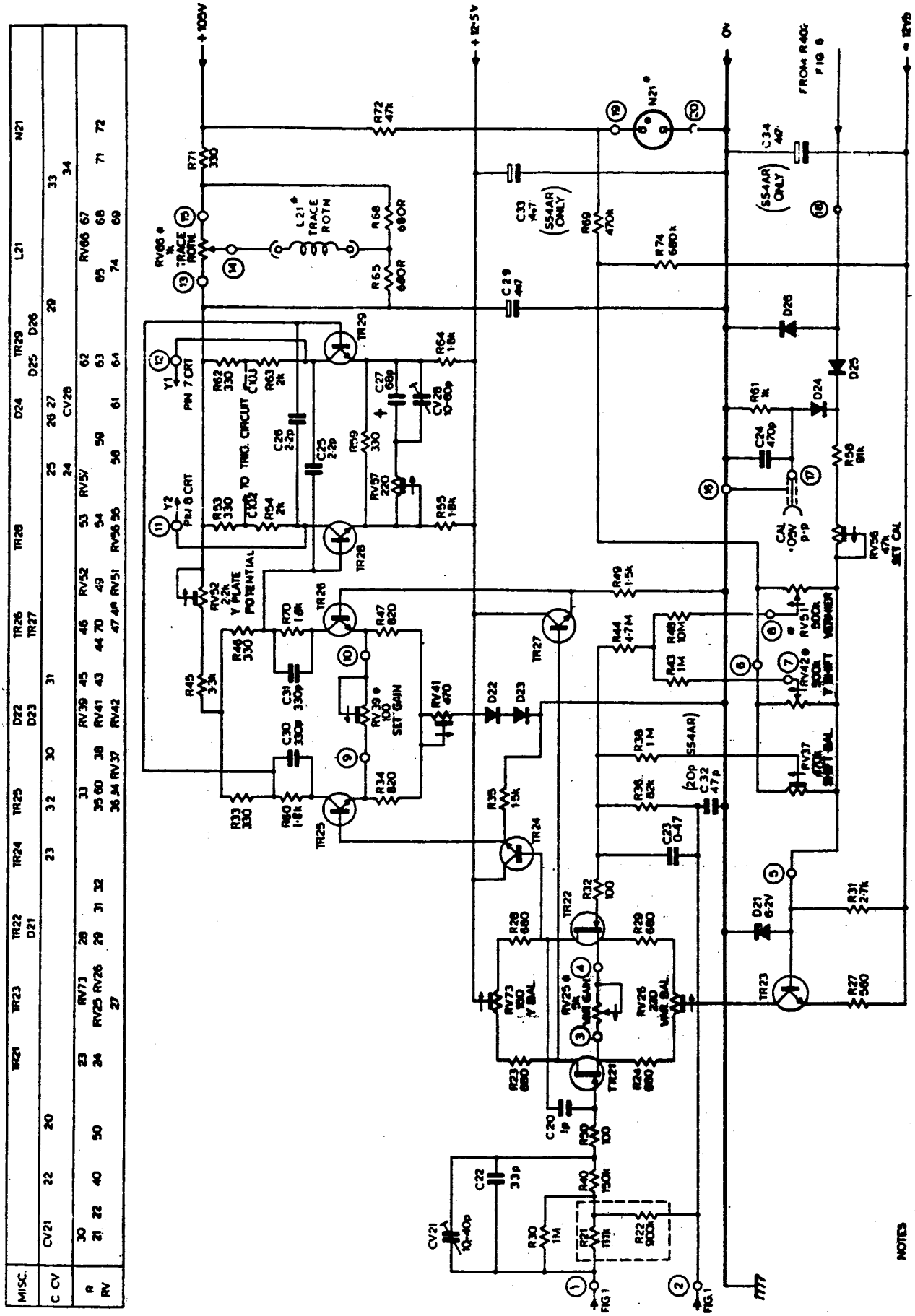

www.TheValvePage.Com

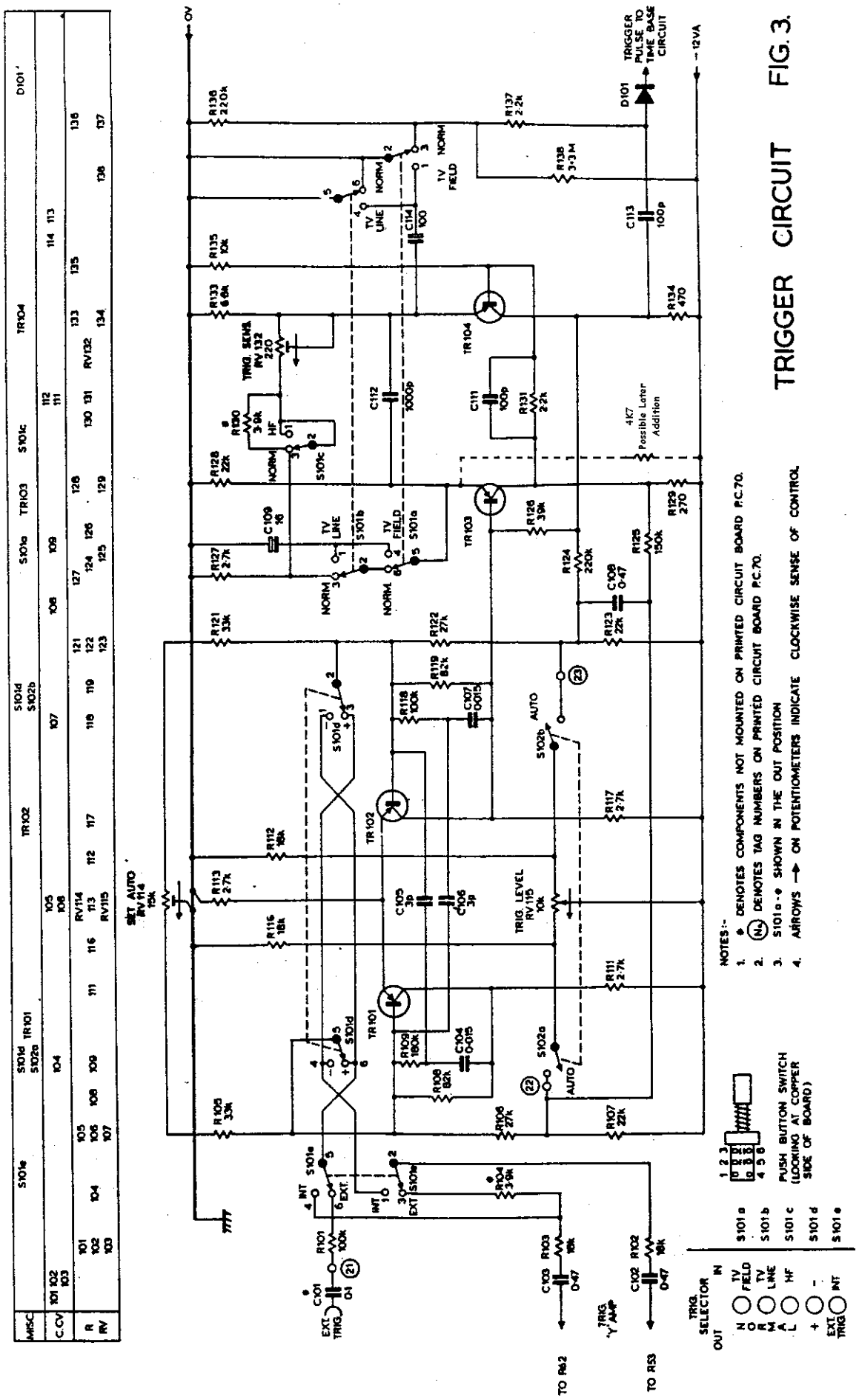
TRIGGER CIRCUIT
FIG. 3.
NOTES:-
1. ● DENOTES COMPONENTS NOT MOUNTED ON PRINTED CIRCUIT BOARD P.C.70.
2. (N.) DENOTES TAG NUMBERS ON PRINTED CIRCUIT BOARD P.C.70.
3. S101a-e SHOWN IN THE OUT POSITION
4. ARROWS → ON POTENTIOMETERS INDICATE CLOCKWISE SENSE OF CONTROL.
PUSH BUTTON SWITCH (LOOKING AT COPPER SIDE OF BOARD)
TRIGGER PULSE TO TIME BASE CIRCUIT
TRIG. SELECTOR
TRIG. AMP
TO R62
TO R53
SET AUTO RV114 75k
TRIG. LEVEL RV115 10k
TRIG. SENS. RV132 220
4K7 Possible Later Addition
TR101
TR102
TR103
TR104
D101
C.O.V.
MISC.

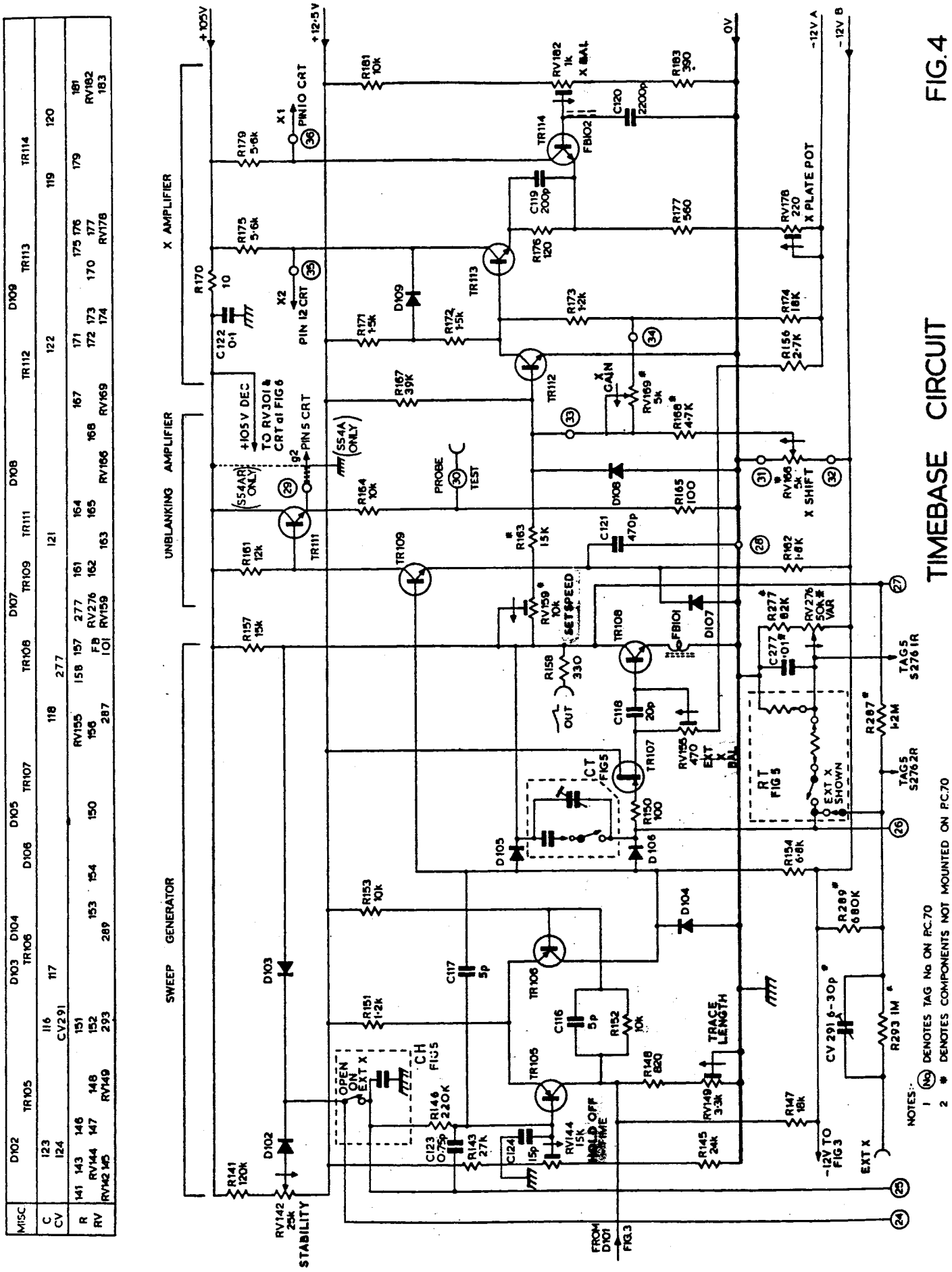
TIMEBASE CIRCUIT
FIG.4
X AMPLIFIER
UNBLANKING AMPLIFIER
SWEEP GENERATOR
+105V
+12·5V
0V
-12V A
-12V B
X1 PIN 10 CRT
X2 PIN 12 CRT
PIN 5 CRT
+105 V DEC TO RV301 & CRT of FIG 6
(S54AR ONLY)
(S54A ONLY)
PROBE
TEST
X GAIN
X PLATE POT
X SHIFT
RV182 1k X BAL
SET SPEED
OUT
EXT X BAL
RT FIG 5
EXT X SHOWN
TAG 5 S276 IR
TAG 5 S276 2R
CT FIG 5
CH FIG 5
OPEN ON EXT X
HOLD OFF SCHME
TRACE LENGTH
STABILITY
FROM D101 FIG 3
-12V TO FIG 3
EXT X
NOTES:-
1 (No) DENOTES TAG No ON P.C.70
2 # DENOTES COMPONENTS NOT MOUNTED ON P.C.70

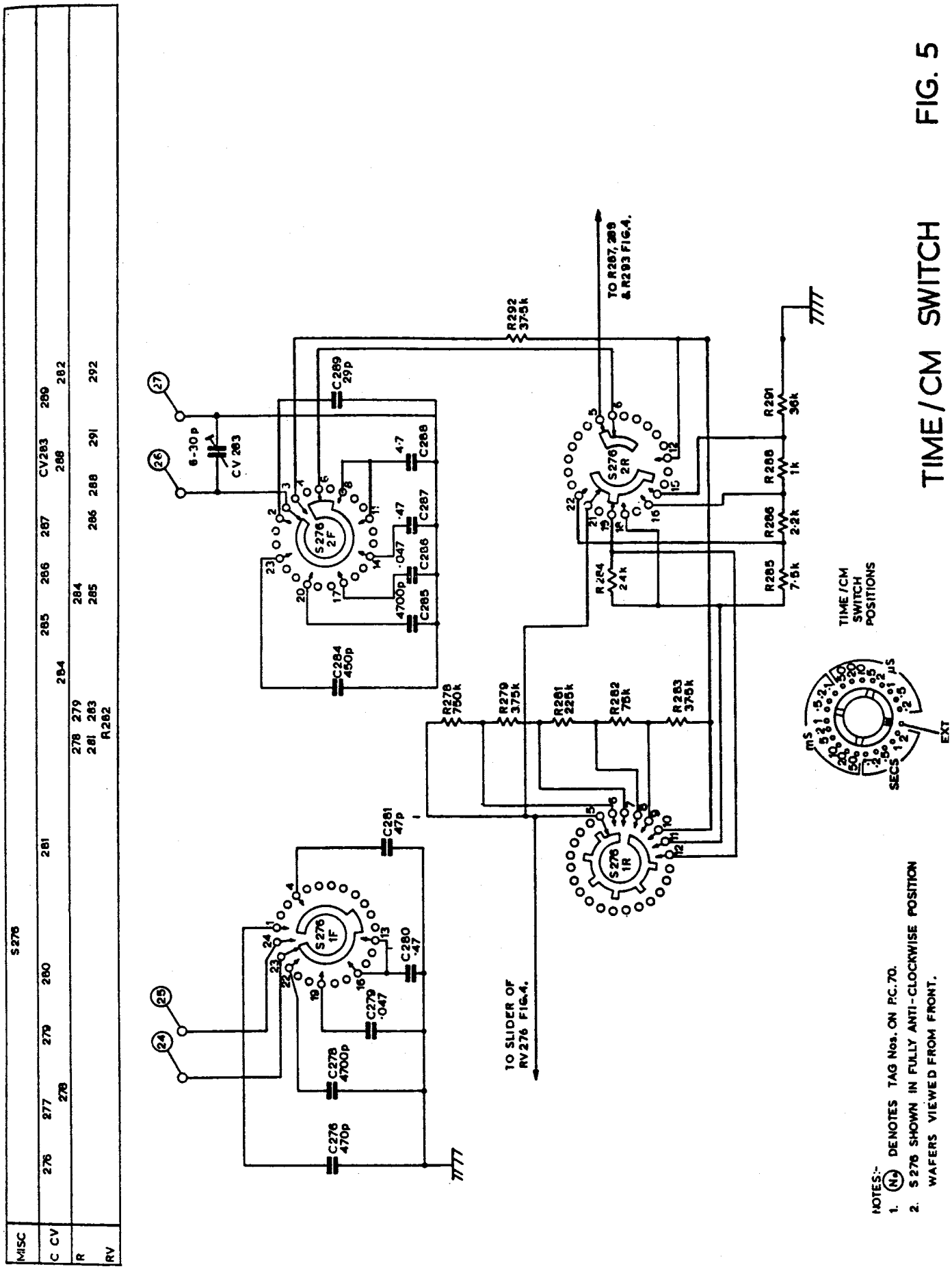

TIME/CM SWITCH

FIG. 5

www.TheValvePage.Com

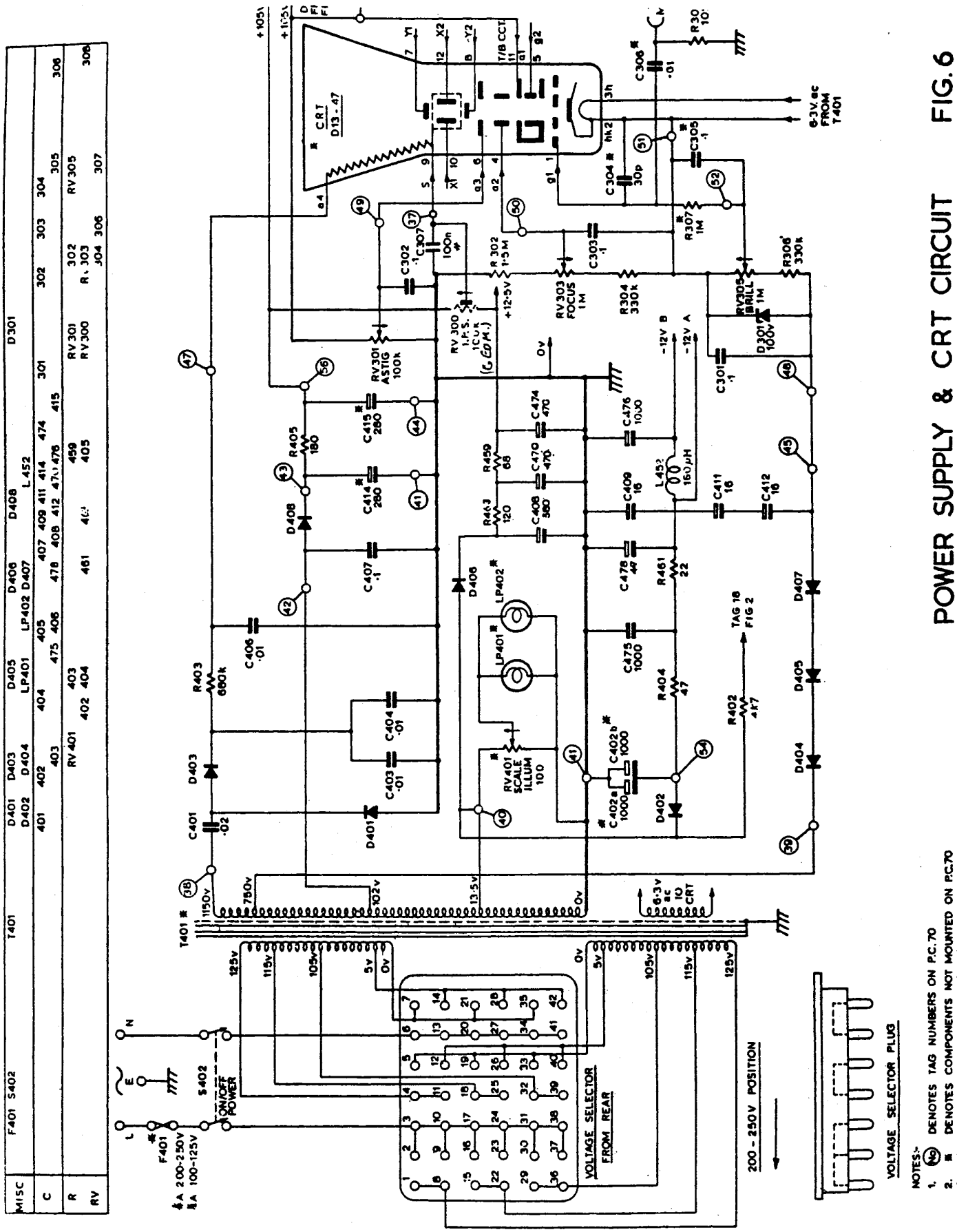
POWER SUPPLY & CRT CIRCUIT
FIG. 6
NOTES:-
1. (49) DENOTES TAG NUMBERS ON P.C.70
2. ✱ DENOTES COMPONENTS NOT MOUNTED ON P.C.70
3. # C307 APPLIES TO S54AR ONLY
VOLTAGE SELECTOR PLUG
VOLTAGE SELECTOR FROM REAR
200 - 250V POSITION
ON/OFF POWER
CRT D13-47
TAG 18 FIG 2

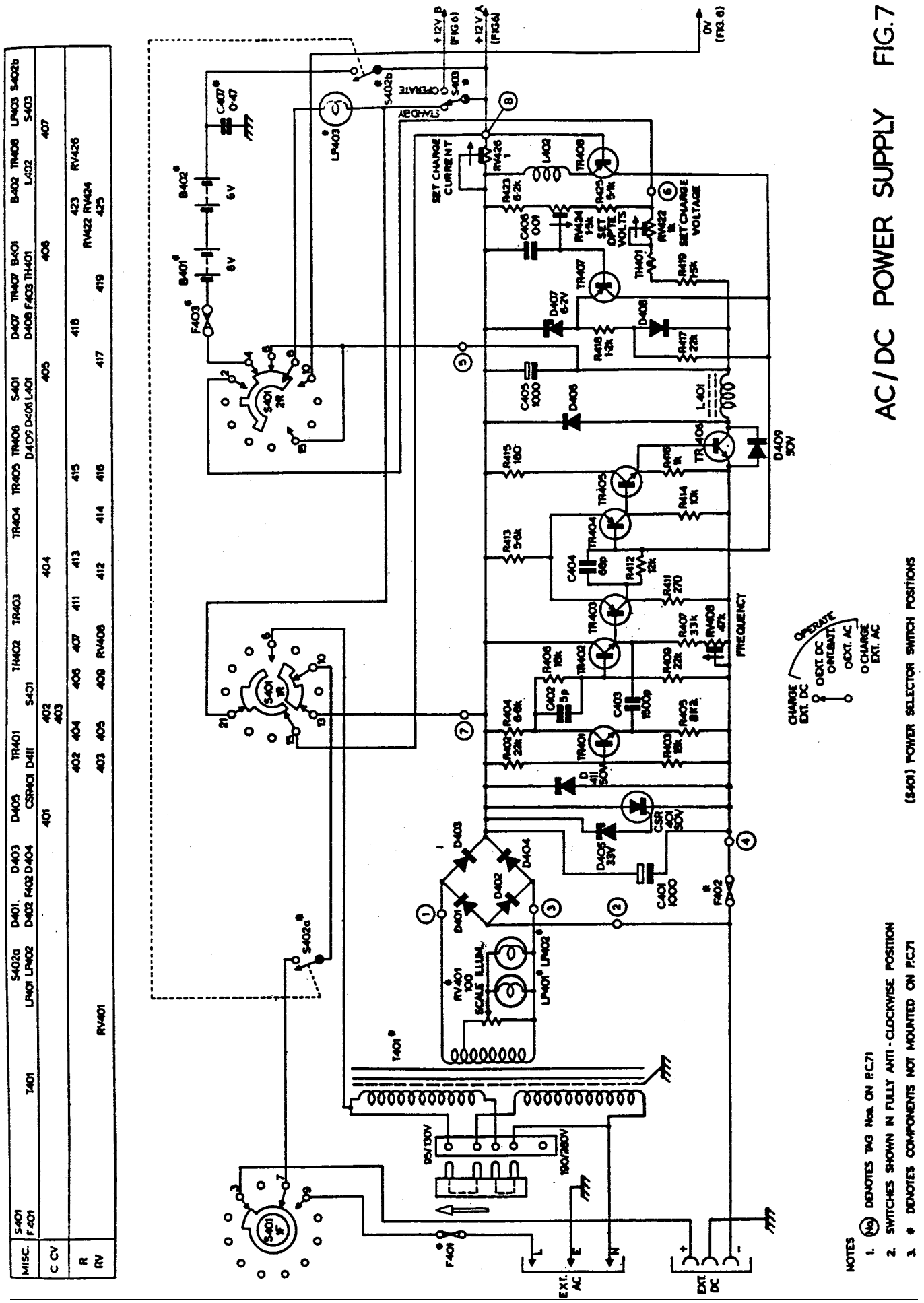

www.TheValvePage.Com