LEADER TEST INSTRUMENTS

Supplied by
LEATHAM ELECTRONICS LTD.
HEAD OFFICE:
58 KENT TERRACE, WELLINGTON
BOX 1284 PHONE 859-409

MODEL LDM-171

DISTORTION METER

INSTRUCTION MANUAL



CASA Modular Systems
Print-Date: 27/02/21
Phone: 64-4-9393 777
66 Fitzherbert Street,
Petone, 5012, Wellington
eMail: sales@casa.co.nz
eCommerce: www.casamodularsystems.co
BarTender: CASA-100x30L-Address_2019R2.btw

LEADER ELECTRONICS CORP.

TABLE OF CONTENTS

1. GENERAL 2
2. SPECIFICATIONS 2
   - 2.1 Distortion Measurement 2
   - 2.2 Level Measurement 2
   - 2.3 S/N Measurement 2
   - 2.4 Common Specifications 2
3. PANEL FUNCTIONS 3
   - 3.1 Front Panel 3
   - 3.2 Rear Panel 4
4. OPERATION 5
   - 4.1 Preliminary Notes 5
     - 4.1.1 Power Supply Voltage 5
     - 4.1.2 Input Voltage 5
     - 4.1.3 Cables 6
   - 4.2 Distortion Measurement 6
     - 4.2.1 Manual Tuning (MAN) 6
     - 4.2.2 Auto-Tuning (AUTO) 6
     - 4.2.3 Principle of Distortion Measurement 7
   - 4.3 AC Voltage Measurement 7
   - 4.4 S/N Measurement 8
   - 4.5 Use of Output 9
5. MAINTENANCE 9

1. GENERAL

The LDM-171 is an easy-to-use, semi-automatic distortion meter that can measure all total harmonic distortion in audio amplifiers and communications equipment. It covers the entire audio band from 20Hz to 20kHz with a high sensitivity of 0.1% full-scale.

An auto-tuning circuit enables distortion to be measured easily even in the 1% and lower ranges, where manual tuning is difficult.

A highly sensitive built-in millivoltmeter enables the LDM-171 to function also as a signal-to-noise (S/N) meter.

2. SPECIFICATIONS

2.1 Distortion Measurement

Frequency ranges	Three ranges: 20Hz to 20kHz
Measurement ranges	Seven ranges: 0.1%, 0.3%, 1%, 3%, 10%, 30% and 100%
Input voltage ranges	Four ranges: 0.35V to 1V, 1V to 3V, 3V to 10V, 10V to 30V
Minimum measurable input voltage	350mV
Maximum measurable input voltage	30V
Measurement accuracy	±5% of fullscale (except in 100% range)
Residual distortion	0.01% max.
Input impedance	Approx. 100kΩ, shunt capacitance 50pF max.
Filter characteristics	
Fundamental suppression	80dB min.
Harmonic attenuation	0.6dB max. (2nd and 3rd harmonics)
Auto-tuning	
Capture ranges	1%, 0.3%, 0.1%

2.2 Level Measurement

Frequency range	20Hz to 200kHz
Measurement ranges	Twelve ranges (0.3, 1, 3, 10, 30 and 100) in both mV and V
Measurement accuracy	±5% of fullscale
Input impedance	1MΩ, shunt capacitance 50pF max.

2.3 S/N Measurement

Measurement range	0dB to 80dB
Input voltage range	Same as for distortion measurement
Input impedance	Approx. 100kΩ, shunt capacitance 50pF max.

2.4 Common Specifications

High-pass filter	
Cutoff frequency	400Hz
Rolloff	12dB/oct
Monitor terminal	
Output voltage	1Vrms at fullscale reading
Output impedance	Approx. 1kΩ
Power requirements	100V ±10%, 50/60Hz. Alterable to 120V, 200V or 240V by rewiring transformer taps.
External dimensions	300(W) x 150(H) x 250(D)mm
Ambient temperature	0°C to 40°C
Accessories	1 banana tip/alligator clip lead Instruction manual

3. PANEL FUNCTIONS

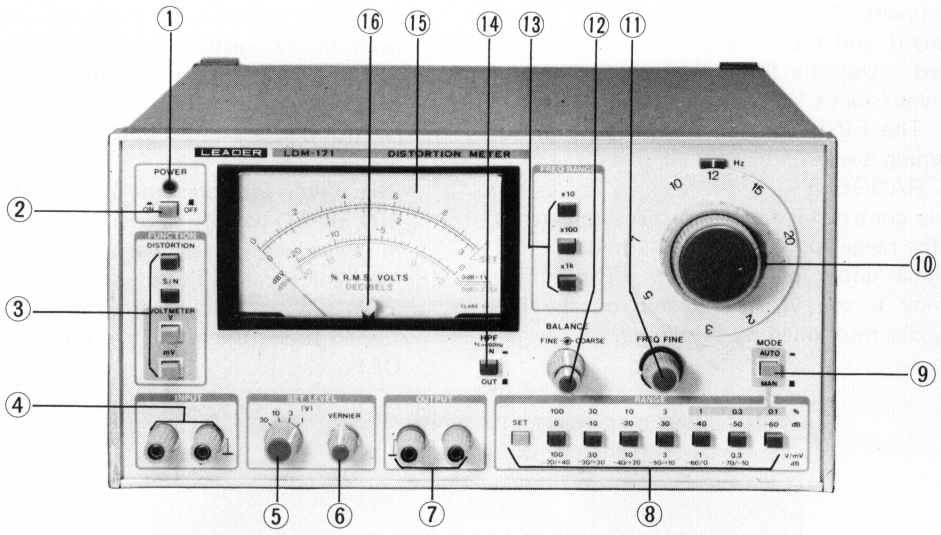

Fig. 3-1

3.1 Front Panel (Fig. 3-1)

(1) POWER (Pilot lamp)
Lights when power is on.

(2) POWER (Switch)
Push down (▬) to turn power on. Pilot lamp lights.
Push again (▙) to turn power off.

(3) FUNCTION

DISTORTION	Press this switch to measure distortion.
S/N	Press this switch to measure S/N.
VOLTMETER	Press the V switch to measure AC voltage of 100mV or greater. Press the mV switch to measure AC voltages of 100mV or less.

(4) INPUT
Connect the signal to be measured to these terminals. Input impedance is approximately 100kΩ for the DISTORTION and S/N functions, and 1MΩ for the VOLTMETER function.

(5) SET LEVEL range switch
Select the range for distortion and S/N measurement from 1V to 30V, depending on the input voltage.

(6) SET LEVEL VERNIER
After setting the approximate level with the SET LEVEL range switch, turn the VERNIER control to move the pointer to the fullscale position (marked SET on the meter).

(7) OUTPUT
AC output proportional to the meter reading is provided during distoriton, S/N and AC voltage measurements.

(8) RANGE
These switches set the measurement range for each of the functions. The SET switch is used in distortion and S/N measurement. When it is pressed, meter fullscale is adjusted to the value set by the SET LEVEL switches (5) and (6).

(9) MODE MAN ▙ / AUTO ▬
In distortion measurement, tuning can be performed either manually or automatically. The capture ranges for auto-tuning (AUTO ▬) are from 1% to 0.1%.
Note: When auto-tuning (▬) is used, the FREQ FINE (11) and BALANCE (12) controls are inoperative.

(10) Frequency range dial
Use this two-speed dial to tune the LDM-171 to the input frequency in distortion measurement. Turn the outer dial to make large changes in the frequency. Use the inner dial for general tuning.

(11) FREQ FINE
This control fine-adjusts the tuning frequency in distortion measurement. Before using it, move the pointer down to about 1% with the frequency dial (10) and balance controls.
Note: The FREQ FINE control is inoperative in the auto-tuning mode.

⑫ BALANCE FINE-⊙-COARSE
This control adjusts the balance in distortion measurement. Use the outer control for coarse adjustment and the inner control for fine adjustment. Use the fine adjustment when the meter reads about 1% below.
Note: The FINE control is inoperative in the auto-tuning mode.

⑬ FREQ RANGE
Use this control in distortion measurement to select the range appropriate to the frequency of the signal under measurement. The tuning frequency is the value indicated on the frequency dial multiplied by this range.

⑭ HPF OUT ▙ / IN ▬
The high-pass filter rejects hum and other low-frequency components in the signal being measured during distortion or S/N measurement. The cutoff frequency is 400Hz. The filter roll-off is 12dB/oct. The filter operates when the control is pressed to the IN position (▬).

⑮ Meter
The meter indicates the measured distortion, S/N, or AC voltage value. Although calibrated in rms values, it has a mean value response.

⑯ Mechanical zero-adjustment control
This is a screwdriver adjustment that can be turned to set the pointer to zero when power is OFF.

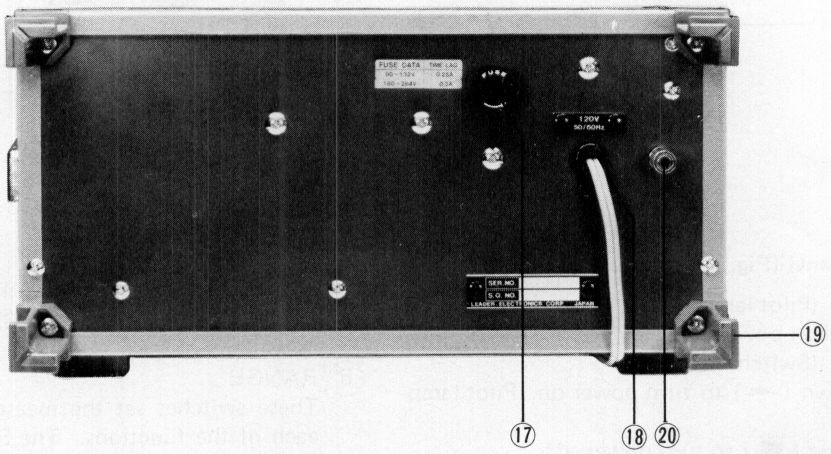

Fig. 3-2

3.2 Rear Panel (Fig. 3-2)

⑰ Fuse
The fuse cap can be turned in the direction of the arrow with a Phillips screwdriver to remove both it and the fuse. Use a fuse of the correct type and rating.

⑱ Power cable winding posts
Plug the cable into an outlet of the rated voltage.

⑲ Power cable winding posts

⑳ Ground terminal
The ground terminal is connected to the chassis.

4. OPERATION

4.1 Preliminary Notes

4.1.1 Power Supply Voltage

There is a ±10% tolerance around the power supply voltage rating. If the voltage is more than 10% below the rating, the meter may not function correctly. If the voltage is more than 10% above the rating, the power supply circuit may be damaged.

Check the voltage range and fuse rating on the rear panel.

The power transformer has series and parallel winding taps for 100V and 120V. The voltage rating can be modified by altering the tap wiring.

Five ranges are possible, as given in the table below. Check that the fuse rating matches the range.

Rating	Permissible voltage range (±10%)	Fuse rating
100V 120V	90 – 110V 108 – 132V	0.25A Time lag
200V 220V 240V	180 – 220V 198 – 242V 216 – 264V	0.2A Time lag

Wiring of Transformer Taps

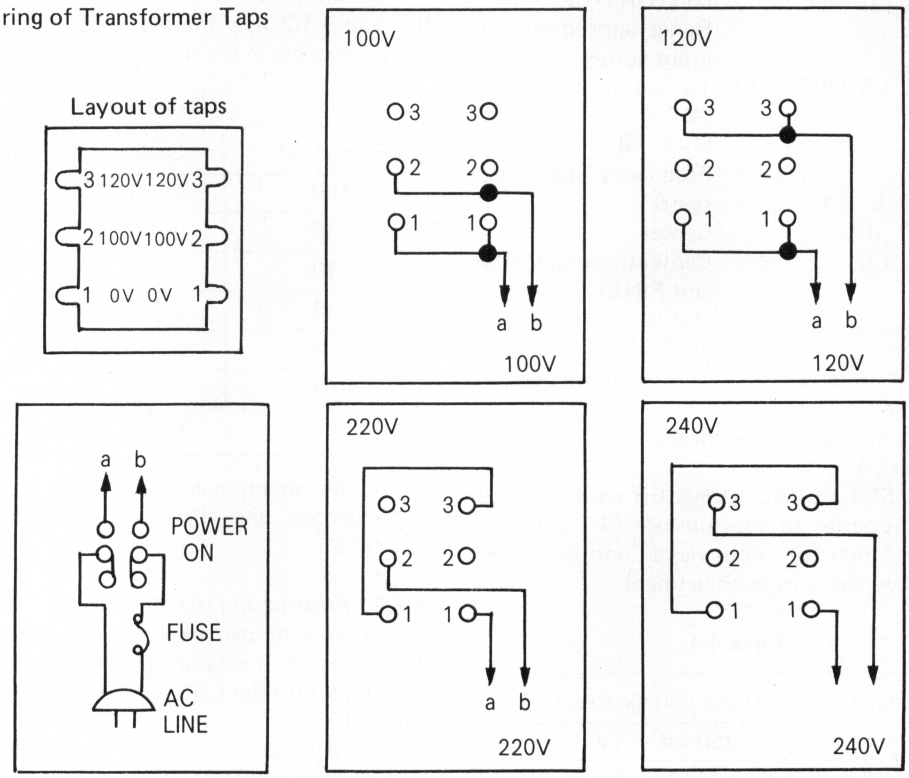

4.1.2 Input Voltage

The tables below list the maximum voltages that may be applied across the INPUT terminal (14) Do not apply higher voltages.

- Distortion and S/N Measurement

Range	Maximum permissible input voltage
1V	10Vrms
3V	30Vrms
10V, 30V	50Vrms

- AC Voltage Measurement

Voltmeter	Maximum permissible input voltage
V	200Vrms
mV	10Vrms

4.1.3 Cables

Input and output cables should be coaxial cables or other shielded cables. Unshielded cables will give incorrect readings due to induced noise.

4.2 Distortion Measurement

4.2.1 Manual Tuning (MAN)

First set up the LDM-171 front panel as follows.

Control	Setting
FUNCTION ③	DISTORTION
SET LEVEL ⑤	Range appropriate for input voltage
SET LEVEL VERNIER ⑥	Turned fully left
RANGE ⑧	SET
MODE ⑨	MAN
Dial ⑩ } FREQ RANGE ⑪	Frequency of input signal
FREQ FINE ⑫	Center
BALANCE ⑬	Center (both COARSE and FINE)
HPF ⑭	Use if necessary when input signal frequency is 1kHz or greater.

(1) Switch power ON.
(2) Connect the signal to be measured to the INPUT terminals ④.
(3) Use the SET LEVEL VERNIER control to adjust the pointer to the fullscale SET position. Table 4-1 lists the input ranges and the ranges covered by the vernier adjustment.

Table 4-1

Range (V)	Input voltage range
1	350mV – 1V
3	1V – 3V
10	3V – 10V
30	10V – 30V

Do not move the SET LEVEL controls after completing the fullscale adjustment.

(4) Press the 100% range switch (immediately to the right of the SET range switch).
(5) Tune by turning the dial ⑩ to obtain the minimum possible meter reading.
(6) Turn the COARSE BALANCE control to further minimize the meter reading.
(7) Repeat steps (5) and (6) until the meter reading cannot be further minimized. If the meter reading falls below 1/3 of fullscale, change to the 30% range. If the meter reading again falls below 1/3 of fullscale, change to the 10% range, then to the 3% range, then to the 1% range if necessary, and repeat steps (5) and (6).
(8) If the 1% range is reached, use the FREQ FINE ⑪ and BALANCE FINE ⑫ controls to tune th frequency more accurately and find the point that minimizes the meter reading. If the meter reading falls below 1/3 of fullscale, change the range to 0.3%, then to 0.1% if necessary, and adjust the tuning in the same way.
(9) The minimum meter reading finally obtained is the distortion of the input signal.
(10) Table 4-2 lists the meter scales and their value multipliers in the different ranges.

Table 4-2

Range (%)	Scale	Multiplier
100	0 – 1	100
30	0 – 3	10
10	0 – 1	10
3	0 – 3	1
1	0 – 1	1
0.3	0 – 3	0.1
0.1	0 – 1	0.1

If the meter reads 1.5 in the 0.3% range, for example, the distortion value is 1.5 x 0.1 = 0.15%.

4.2.2 Auto-tuning (AUTO)

Auto-tuning can be used in the 0.1%, 0.3% and 1% ranges when measuring distortion.

First set up the LDM-171 front panel as follows.

Control	Setting
FUNCTION ③	DISTORTION
SET LEVEL ⑤	Range appropriate for input voltage
SET LEVEL VERNIER ⑥	Turned fully left
RANGE ⑧	SET
MODE ⑨	AUTO
Dial ⑩ } FREQ RANGE ⑬	Frequency of input signal
FREQ FINE ⑪	Center
BALANCE ⑫	Center (both COARSE and FINE)
HPF ⑭	Use if necessary when input signal frequency is 1kHz or greater.

(1) Switch power ON.
(2) Connect the signal to be measured to the INPUT terminals (4).
(3) Use the SET LEVEL VERNIER control to adjust the pointer to the fullscale SET position. Do not move the SET LEVEL controls after completing the fullscale adjustment.
(4) Press the 100% range switch (immediately right of the SET range switch).
(5) Tune by turning the dial (10) to obtain the minimum possible meter reading.
(6) Turn the COARSE BALANCE control to further minimize the meter reading.
(7) Repeat steps (5) and (6) until the meter reading cannot be further minimized. If the meter reading falls below 1/3 of fullscale, change to the 30% range. If the meter reading again falls below 1/3 of fullscale, change to the 10% range, then to the 3% range if necessary, and repeat tuning steps (5) and (6).
(8) If the reading falls below 1/3 of fullscale in the 3% range, change the range to 1%. At this point auto-tuning takes over, so further manual tuning is unnecessary.
(9) If the meter reading falls below 1/3 of fullscale, change the range to 0.3%, then to 0.1% if necessary.

Note: The FREQ FINE (11) and BALANCE FINE (12) controls are inoperative in the auto-tuning (AUTO ▬) mode.

4.2.3 Principle of Distortion Measurement

The distortion of a signal is given by equation *(1)* below.

$$\text{Distortion} = \frac{\text{Level of harmonics}}{\text{Level of fundamental}} \times 100 \cdots (1)$$

Fig. 4-1 shows the principle by which the LDM-171 measures distortion.

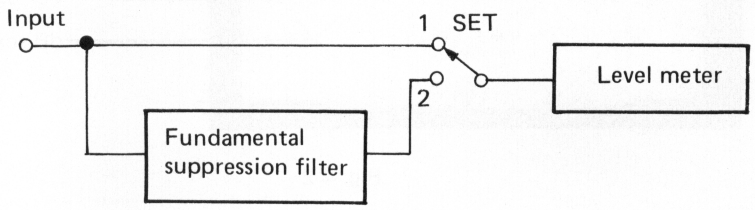

Fig. 4-1

First the signal level is measured (in the SET range) with the switch at position 1. Then the switch is moved to position 2 and the level with the fundamental wave removed is measured to determine the distortion. The formula by which the distortion is calculated is:

$$\text{Distortion} = \frac{\text{Harmonics Level}}{\sqrt{(\text{Fundamental Level})^2 + (\text{Harmonics Level})^2}} \times 100 \cdots (2)$$

From equation *(2)* it is evident that as the distortion increases, so does the error. For the distortion of 10%, however, the error is only 0.5%, not enough to raise problems in general distortion measurement applications, which is why equation *(2)* is used in the LDM-171.

The meter of the LDM-171 indicates mean value on an rms scale. For some waveforms, therefore, there is a difference between the indicated value and the true rms value. At distortions of 10% or less, however, the error is negligible.

4.3 AC Voltage Measurement

First set up the LDM-171 front panel as follows.

Control	Setting
FUNCTION (3)	VOLTMETER V or mV
RANGE (8)	Range (other than SET) appropriate for the input voltage

(1) Switch power ON.
(2) Connect the signal to be measured to the INPUT terminals (4).
(3) Read the meter. If the reading is less than 1/3 of fullscale, switch to the next lower range. Always keep the pointer above 1/3 of fullscale. The scale to read depends on the RANGE and VOLTMETER switch settings as indicated in Table 4-3.

Table 4-3

Range	Voltmeter		Scale
	V	mV	
100	100V	100mV	0 – 1
30	30V	30mV	0 – 3
10	10V	10mV	0 – 1
3	3V	3mV	0 – 3
1	1V	1mV	0 – 1
0.3	0.3V	0.3mV	0 – 3

For a decibel reading, the relation between the range and the V or mV switch setting is as indicated in Table 4-4. Read the dBV or dBm scale on the meter.

Table 4-4

Range	Voltmeter			
	V		mV	
100	100V	+40dB	100mV	−20dB
30	30V	+30dB	30mV	−30dB
10	10V	+20dB	10mV	−40dB
3	3V	+10dB	3mV	−50dB
1	1V	0dB	1mV	−60dB
0.3	0.3V	−20dB	0.3mV	−70dB

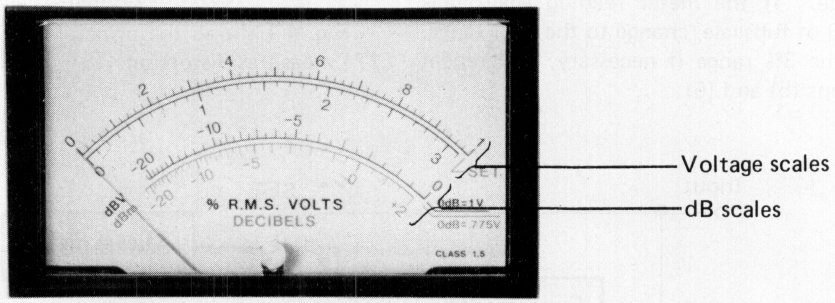

Fig. 4-2

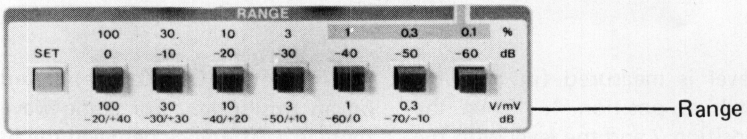

Fig. 4-3

Note: When the approximate voltage of the signal to be measured is unknown, set the LDM-171 to the highest (100V) voltage range.

4.4 S/N Measurement

Signal-to-noise (S/N) ratios can be measured as described below.

First set up the LDM-171 front panel as follows.

Control	Setting
FUNCTION ③	S/N
SET LEVEL ⑤	Range appropriate for the signal level
SET LEVEL VERNIER ⑥	Turned fully left
RANGE ⑧	SET
HPF ⑭	Use if necessary when input signal frequency is 1kHz or greater.

(1) Switch power ON.
(2) Connect the signal to be measured to the INPUT terminals ④.
(3) Set up for signal measurement, and use the SET LEVEL VERNIER control to adjust the pointer to the fullscale SET position.
(4) Next set up for noise measurement and measure the noise level. Drop the range until the meter indicates at least 1/3 of fullscale, and read the value.
(5) To measure with the hum component removed, press the HPF switch ⑭ to the IN (▬) position. Hum can be attenuated by approximately 36dB.

The measured value is the sum of the decibel value of the range and the decibel meter reading.

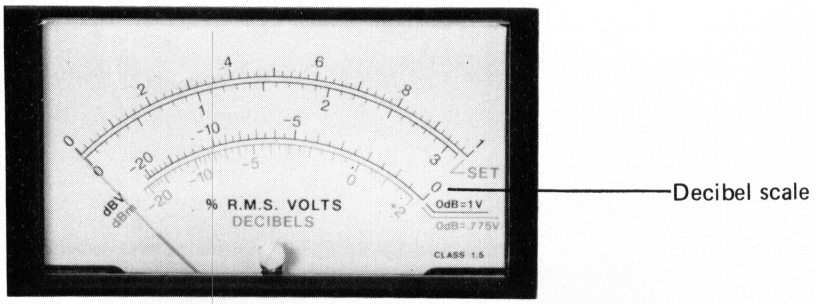

Fig. 4-4

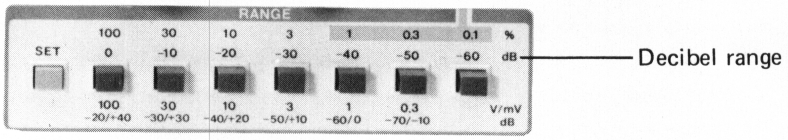

Fig. 4-5

4.5 Use of OUTPUT

An AC output voltage proportional to the meter reading is provided at the output terminals. When the meter reads full scale, the voltage across the output terminals is 1Vrms (if there is no connection between the terminals). Output impedance is approximately 1kΩ.

When the DISTORTION function is used, an oscilloscope can be connected to the output terminals to observe the distortion component and analyze its characteristics.

When the S/N function is used, noise components can be amplified and observed.

When the VOLTMETER function is employed, the output can be used to monitor the input signal waveform, or as an amplifier function.

5. MAINTENANCE

The LDM-171 is designed to give stable performance in normal use. If aging of parts causes malfunction or loss of adjustment, contact your sales representative.

- Removal of the housing
  The upper and lower parts of the housing can be detached by removing the four lugs for winding the power cord and the two additional screws indicated right.

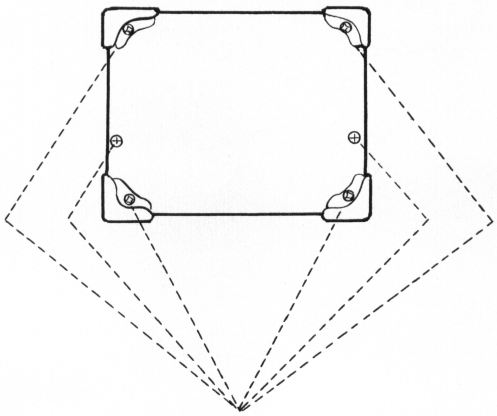

Remove these six screws.

LEADER TEST INSTRUMENTS

LEADER ELECTRONICS CORP.

2-6-33 TSUNASHIMA-HIGASHI, KOHOKU-KU,
YOKOHAMA, JAPAN.
PHONE: (045) 541-2121 TELEX: J47780 JPLEADER

LEADER INSTRUMENTS CORP.

380 OSER AVENUE, HAUPPAUGE, N.Y. 11788 U.S.A.
PHONE: (516) 231-6900
TELEX: 510-227-9669 LEADER HAUP

86011KM

Printed in Japan.