TECHNICIANS

CASA Modular Systems
66 Fitzherbert Street, Petone 5012, Wellington
www.casa.co.nz
Ph: +64-4-9393 777 eMail: sales@casa.co.nz

VT-126
(VT-125)

HIGH SENSITIVITY VOLTMETER
(NOISE METER)

INSTRUCTION MANUAL

TRIO

GENERAL

The Noisemeter is an ultra-sensitive electronic voltmeter having a maximum sensitivity of 10μV fullscale (30 μV for the VT-125). Its wide frequency range covers from 10 Hz to 500 kHz (1 mV ~ 300V) and the five types of weighting are selectable. In addition, DIN or CCIR quasi-peak or average detection with RMS display is selectable, making possible S/N and noise measurements in accordance with JIS-A, DIN NOISE, DIN AUDIO, CCIR and CCIR/ARM standards. The units are also provided with an overload indicator and a 10 dB range relative reference adjustment. AC and DC outputs are provided and remote control of range switching is available to facilitate use on the production line.

CONTENTS

FEATURES

★ VT-126: 10 μV fullscale maximum sensitivity with 0.2 μV graduated scale for measurements down to −120 dB.
VT-125: Maximum sensitivity of 30 μV fullscale.

★ Button selection of JIS-A, DIN NOISE, DIN AUDIO, CCIR and CCIR/ARM weighting filters make possible noise measurements and S/N measurements in accordance with a variety of standards.

★ In addition to average detection and RMS display, DIN and CCIR semi-peak detection with RMS display is available for measurements in accordance with those standards.

★ AC OUT and DC OUT terminals are provided to facilitate waveform observation, recording of measured values or use of the unit as an amplifier.

★ A relative reference adjustment from 0 ~ −10 dB makes possible relative measurements of signals with respect to an arbitrarily set reference level, particularly useful in S/N measurement.

★ An overload indication prevents measurement errors caused by distortion not detected by the operator by viewing the meter level for use with the weighting filters.

★ Logic control is used for range selection making this function remote controllable (option).

SPECIFICATIONS

ITEM	VT-126	VT-125
VOLTMETER		
Voltage ranges:	10μV ~ 300V (10 μV/30 μV/100 μV/300 μV/1 mV/3 mV/10 mV/ 30 mV/100 mV/300 mV/1V/3V/10V/30V/100V/ 300V fullscale) dB: −100 ~ +50 dB (0 dB = 1V) dBm: −98 ~ +52 dBm (0 dBm = 1 mW/600)	30μV ~ 300V (30 μV/100 μV/300 μV/1 mV/3 mV/10 mV/ 30 mV/100 mV/300 mV/1V/3V/10V/30V/100V/ 300V fullscale) dB: −90 ~ +50 dB (0 dB = 1V) dBm: −88 ~ +52 dBm (0 dBm = 1 mW/600)
Display accuracy:	With average detection, in FLAT mode: 10 μV and 30 μV range: within ±5% of fullscale 100μV ~ 300V range within ±3% of fullscale With quasi-peak detection and DIN NOISE, DIN AUDIO or CCIR weighting filter: 10 μV range: within +7% of fullscale 30 μV ~ 300V range within ±5% of fullscale	With average detection in FLAT mode: 30 μV range: within +5% of fullscale 100μV ~ 300V range within +3% of fullscale With quasi-peak detection and DIN NOISE, DIN AUDIO or CCIR weighting filter: 30μV ~ 300V range within ±5% of fullscale
Frequency response:	With average detection and RMS display 10 μV range: 20 Hz ~ 10 kHz ±5% 10 Hz ~ 30 kHz ±10% 30 μV ~ 300 μV range: 20 Hz ~ 20 kHz ±5% 10 Hz ~ 100 kHz ±10% 1 mV ~ 300V range: 20 Hz ~ 100 kHz ±3% 15 Hz ~ 300 kHz ±5% 10 Hz ~ 500 kHz ±10% With quasi-peak detection and RMS display 10 μV range: 30 Hz ~ 15 kHz ±5% 20 Hz ~ 20 kHz ±10% 10 Hz ~ 30 kHz ±20%	With average detection and RMS display 30 μV ~ 300 μV range: 20 Hz ~ 20 kHz ±5% 10 Hz ~ 100 kHz ±10% 1 mV ~ 300V range: 20 Hz ~ 100 kHz ±3% 15 Hz ~ 300 kHz ±5% 10 Hz ~ 500 kHz ±10% With quasi-peak detection and RMS display

ITEM	VT-126	VT-125
	30 μV ~ 300V range: 30 Hz ~ 20 kHz ±5% 20 Hz ~ 50 kHz ±10% 10 Hz ~ 100 kHz ±20%	30 μV ~ 300V range: 30 Hz ~ 20 kHz ±5% 20 Hz ~ 50 kHz ±10% 10 Hz ~ 100 kHz ±20%
Input impedance:	1 MΩ ±5% Parallel capacitance: Less than 50pF	1 MΩ ±5% Parallel capacitance: Less than 50pF
Overload voltage level:	10μV ~ 300μV range: AC 10 Vrms DC 500V 1 mV ~ 300mV range: AC 80 Vrms DC + AC peak 500V 1V ~ 300V range: DC + AC peak 500V	30 μV ~ 300μV range: AC 10Vrms DC 500V 1 mV ~ 300 mV range: AC 80 Vrms DC + AC peak 500V 1V ~ 300V range: DC + AC peak 500V
Relative reference adjustment:	0 ~ approx. −12 dB	0 ~ approx. −12 dB
Over level:	Lights up or flickers when a signal of more than +15 dB for maximum value is applied. This indicates that there is a possibility of erroneous indication due to over input when a level weighting filter is used.	Lights up or flickers when a signal of more than +15 dB for maximum value is applied. This indicates that there is a possibility of erroneous indication due to over input when a level weighting filter is used.
Residual noise:	Average detection: 10 μV range input shorted Below 1.5 μVrms (1.0 μVrms TYP.) 30 μV range input shorted Below 5 μVrms (3.0 μVrms TYP.)	Average detection: 30μVrange input shorted Below 5 μVrms (3.0 μVrms TYP.)

ITEM	VT-126	VT-125
	Peak detection: 10 μV range input shorted Below 2.0 μVrms (1.0 μVrms TYP.) 30 μV range input shorted Below 5 μVrms (3.0 μVrms TYP.)	Peak detection: 30 μV range input shorted Below 5 μVrms (3.0 μV TYP.)
Power supply regulation:		
Temperature coefficient:	0.08%/°C or less (Minimum 1 mV range)	0.08%/°C or less (Minimum 1mV range)
Operating temperature and humidity for guaranteed specification:	15 ~ 35°C, 80% maximum.	15 ~ 35°C, 80% maximum.
Full operating range:	0 ~ 50°C, 80% maximum.	0 ~ 50°C, 80% maximum.
AMPLIFIER		
AC AMPLIFIER:		
Gain:	Approx. 100 dB	Approx. 90 dB
Output voltage:	1 Vrms ±10%	1 Vrms ±10%
Output resistance:	600Ω ±10%	600Ω ±10%
Distortion:	Below 1% of fullscale at 1 kHz This distortion is determined by the S/N for the ranges 10 μV ~ 300 μV.	Below 1% of fullscale at 1 kHz This distortion is determined by the S/N for the ranges 30μV ~ 300μV.

ITEM	VT-126	VT-125
S/N:	With respect to fullscale: 1 mV ~ 300V range: 40 dB minimum 300 μV range: 30 dB minimum 100 μV range: 25 dB minimum 30 μV range: 20 dB minimum 10 μV range: 16.5 dB minimum	With respect to fullscale: 1 mV ~ 300V range: 40 dB minimum 300 μV range: 30 dB minimum 100 μV range: 25 dB minimum 30 μV range: 20 dB minimum
Frequency response:	1 mV ~ 300V range: 10 Hz ~ 500 kHz within ±3 dB 30 μV ~ 300 μV range: 10 Hz ~ 150 kHz within ±3 dB 10 μV range: 10 H ~ 30 kHz within ±3 dB	1 mV ~ 300V range: 10 Hz ~ 500 kHz within ±3 dB 30 μV ~ 300 μV range: 10 Hz ~ 150 kHz within ±3 dB
DC OUTPUT AMPLIFER:		
Output voltage:	1V ±10% for fullscale	1V ±10% for fullscale
Output resistance:	600Ω ±10%	600Ω ±10%
Frequency response:	Approx the same as the meter indication.	Approx the same as the meter indication.
POWER SUPPLY SECTION		
Supply voltage:	100/120/220/240VAC ±10% 50/60 Hz	100/120/220/240VAC ±10% 50/60 Hz
Power consumption:	Approx 15W	Approx 15W
Dimensions:	Width 128 mm Height 190 (214) mm Depth 285 (315) mm ( ) dimensions include protrusions from the basic case.	Width 128 mm Height 190 (214) mm Depth 285 (315) mm ( ) dimensions include protrusions from the basic case.

ITEM	VT-126	VT-125
Weight:	4.6 kg	4.6 kg
Accessories:	Power cord ..... 1 Input cable (CA-41) ..... 1 Instruction manual 1	Power cord ..... 1 Input cable (CA-41) ..... 1 Instruction manual 1

BLOCK DIAGRAM

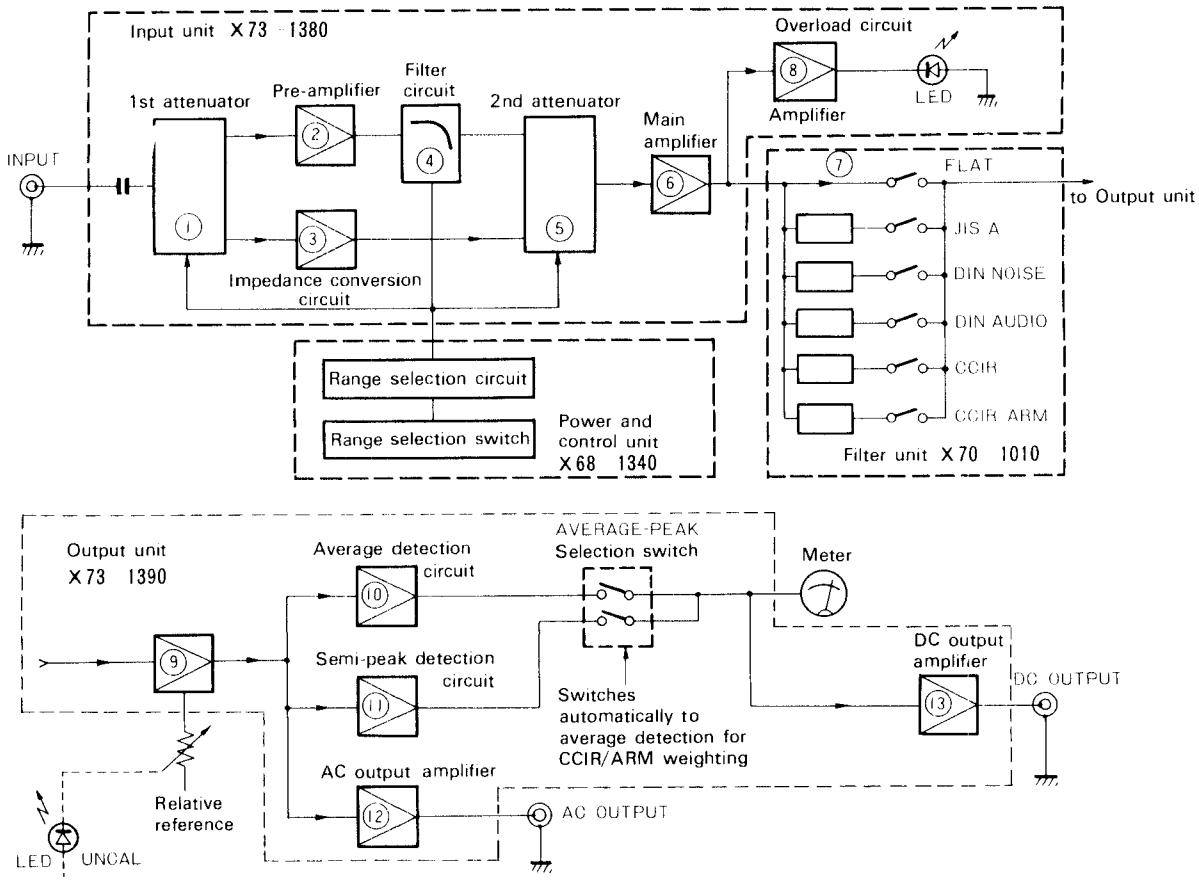

CIRCUIT DESCRIPTION

①. FIRST ATTENUATOR

A resistive divider attenuator which is relay switched between 0 dB (10 μV ~ 300 mV range) and −60 dB (1V ~ 300V range). For the other ranges it is not in the circuit.

③. IMPEDANCE CONVERSION CIRCUIT (Q1 ~ Q3)

Used to convert the output of the first attenuator to a sufficiently low impedance to drive the second attenuator. An FET input voltage follower is used in this circuit. (1 mV ~ 300V range)

⑤. SECOND ATTENUATOR

A resistive divider attenuator in two sections, 0 dB or −30 dB relay selected and 0/−10/−20/−30 dB four step FET switched selected section. This attenuator outputs a 1 mVrms signal for fullscale meter deflection.

② AND ④ PRE-AMPLIFIER AND FILTER (Q4~Q8, Q201,Q202)

For the 10 μV, 30 μV, 100 μV and 300 μV ranges the signal is amplified 100 times and passed to the filter. (Q201 and Q202 is not used in VT-125)

⑥. MAIN AMPLIFIER (Q11 ~ Q14)

A wideband non-inverting amplifier with a differential input of high impedance and low output impedance. The gain in 40 dB and the output is 40 mVrms for a fullscale deflection.

⑦. FILTER AND FILTER SELECTION CIRCUIT

FLAT, DIN NOISE, DIN AUDIO, CCIR and CCIR/ARM weighting filters and the associated selection circuitry.

⑧. OVERLEVEL CIRCUIT (IC2, IC3, Q15)

This circuit uses peak detection of a full-wave rectified signal to detect excessively high signal input levels. An LED display warns of excessively high input.

⑨. IMPEDANCE CONVERSION CIRCUIT

This circuit converts the filter output to a sufficiently low impedance.

⑩. AVERAGE DETECTION CIRCUIT (Q4 ~ Q9)

This circuit detects the average absolute signal value and provides a meter drive signal for an RMS display of signal level.

⑪. QUASI-PEAK DETECTION CIRCUIT (IC1 ~ IC4)

This circuit detects the peak-to-peak signal value and generates a meter drive signal representing the RMS value of the signal in accordance with CCIR standards.

⑫. AC OUTPUT AMPLIFIER (Q10 ~ Q12)

This circuit amplifies the signal from block ⑨ to provide an output signal of 1Vrms for fullscale deflection of the meter.

⑬. DC OUTPUT AMPLIFIER (IC5, IC6)

This circuit amplifies the signal from the meter terminals to provide a DC output of 1V for fullscale meter deflection.

CONTROLS AND INDICATORS

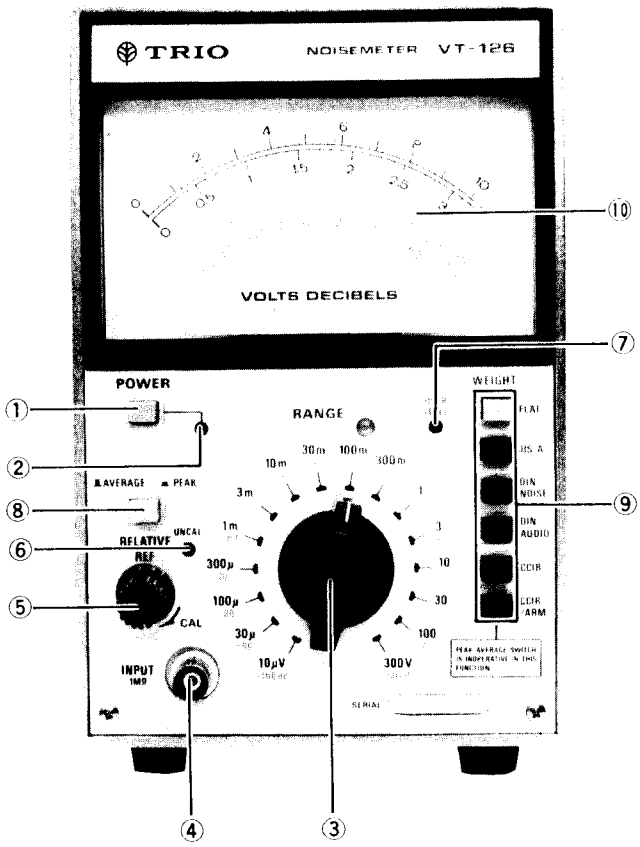

Fig. 1

FRONT PANEL

1. POWER

AC power switch.

2. POWER LAMP

Indicates the VT-126 (VT-125) is powered up. Lights when POWER is depressed.

3. RANGE

Attenuator selector switch. 16 positions (15 for the VT-125) in 10 dB steps. To prevent excessive inputs, this switch is started in the highest, 300V range and gradually worked down range to provide an easily readable meter deflection.

4. INPUT

BNC signal input connector.

5. RELATIVE REF AND 6. UNCAL LAMP

Sensitivity adjustment and uncalibrated annunciator. More than 10 dB of adjustment is possible. When the control is turned fully clockwise, the set range is calibrated. This control can be used to adjust the meter to an appropriate level for relative measurements. When not set at fully clockwise the UNCAL lamp lights to warn the operator.

7. OVERLEVEL

When using weighting filters the effect of the filter is to mask from the operator the presence of an excessively high input level. Thus distortion and the resulting errors can occur without the operator being aware of this condition. To

prevent this the OVERLEVEL warning lamp alerts the operator when the input level goes +15 dB above the full scale level (0 dB).

8. AVERAGE/PEAK

This switch is used to select the detection method. In the released position average detection and RMS display are in effect. Depressing the switch selects either DIN or CCIR quasi-peak detection and RMS display of the signal level. When CCIR/ARM is selected the detection method is automatically switched to average detection and RMS display regardless of the position of this switch.

9. WEIGHT

This six position selection switch group allows selection of one of FLAT or JIS-A, DIN NOISE, DIN AUDIO, CCIR or CCIR/ARM weighted response. Selection of the FLAT position turns the unit into a wideband AC voltmeter. If no button is depressed, the mode is automatically CCIR/ARM.

JIS-A: Used for noise level measurements in accordance with JIS C1502A, JIS C5551A, IEC-A, and IHF-A standards.

DIN NOISE: Used for noise level measurements in accordance with DIN standard 45405.

DIN AUDIO: Used for 10 Hz ~ 20 kHz audio level measurements in accordance with DIN standard 45405.

CCIR: Used for measurements of noise level in accordance with CCIR standards for measurements.

CCIR/ARM: Used for noise level measurements in accordance with CCIR/ARM standards for DOLBEY B type noise reduction systems. When the CCIR/ARM filter is used, average detection is used regardless of the position of the AVERAGE/PEAK switch.

The appropriate AVERAGE/PEAK switch settings for the various filters are:

Filter:	AVERAGE	PEAK
JIS-A	○	—
DIN NOISE	—	○
DIN AUDIO	○	○
CCIR	—	○
CCIR/ARM	○	—

10. METER

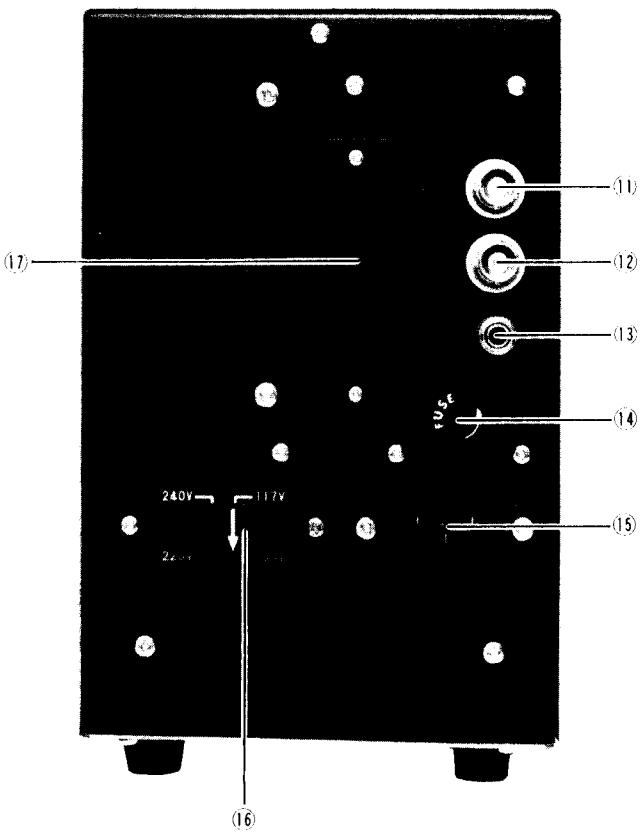

Fig. 2

REAR PANEL

11. AC OUTPUT

This output is used for waveform observation or for used of the VT-126 (VT-125) as an amplifier.

12. DC OUTPUT

This output is used for recording off-line measured values.

13. GND

Ground connection.

14. FUSE HOLDER

Use a screwdriver to open this holder for replacement of the fuse of specified rating.

For 100 or 120V: 0.5A
For 220 or 240V: 0.3A

15. AC POWER CONNECTOR

This is the AC power input connector. Use the power cord provided with the unit.

16. AC LINE VOLTAGE SELECTOR

Set the plug of this selector to the local line voltage (100/120/220/240V AC)

17. BLIND COVER

This cover protects the remote control mounting hole.

OPERATION

1. Check the mechanical zeroing of the meter.
2. Connect the signal cable to INPUT (4).
3. Set the RANGE switch (3) to the 300V range.
4. Connect the power cord and press the POWER (1) switch to turn the unit ON. The red LED (2) should light indicating the unit is ready for use.
5. Input the signal to be measured and if necessary gradually switch to lower (more sensitive) ranges until an easy to read meter deflection is obtained.

USING RELATIVE REF

To make measurements with respect to some arbitrary reference level, input the signal to be used as the reference level and use RELATIVE REF (5) to obtain a 0 dB meter deflection without changing the RELATIVE REF setting measurement of other signals can be made and read directly off the dB scale in dB with respect to the reference level. The adjustment range of the RELATIVE REF control is from 0 to −12 dB (negative only) so to set 0 dB for signal under 0 dB switching down range must be done.

READING THE METER SCALES (See Fig. 3)

1. VOLTAGE SCALES

These scales consist of a 0 ~ 10 and 0 ~ 3 scale which are used to read ranges which are multiples of 10 and 3 respectively. The range setting always refers to the meter fullscale deflection. The ranges are designed to overlap to allow values on the lower portion of one range to be more accurately read on the upper portion of the next more sensitive range.

2. dBm SCALES

A level of 1 mW into a 600Ω resistance is take as 0 dBm (0.775V) and readings are made in 0 dBm with respect to this standard reference level.

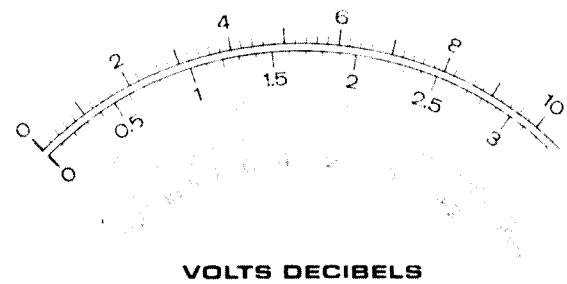

Fig. 3

PRECAUTIONS

1. To assure accurate measurements allow a five minute warming up period before actual measurements are begin. Note that switching between 1V and 300 mV and between 1 mV and 300 μV and 10 μV upon powering the unit up may result in the deflection of the meter.
2. To preserve the high sensitivity of this unit, be sure to use either the input signal cable provided or another low capacitance shielded cable. Use of single conductors or other unshielded cables or high impedance signal sources can result in noise being introduced into the measurement circuit.
3. Be sure to take care not to exceed the maximum allowable input levels:

   10 μV ~ 300 μV ranges: AC: 10Vrms
   (30 μV ~ 300 μV range for VT-125) DC: 500V
   1 mV ~ 300 mV ranges: AC: 80Vrms
   DC+AC peak: 500V
   1V ~ 300V ranges: DC+AC peak: 500V

   For excessively high inputs in the 10 μV to 300 μV ranges the input impedance drops to approximately 100Ω.
4. Please note that this unit OVERLEVEL LED lights when the input exceeds 15 dB above the fullscale reading for use with weighting filters to warn against distortion due to highly excessive signal levels. It also normally lights when switching between the 300V and 1V or between the 300 μV and 1 mV ranges, but this is normal and not an indication of excessive signal level.
5. The dynamic range of the units is 40 ~ 80 dB making it impossible to measure the internal weighing filter's frequency response while they are installed in the unit.
6. A signal or DC voltage should never be placed between the instrument case and ground.
7. When this instrument is used in a location where the AC line has pulse noise of a level higher than the internal filter can handle, performance may be affected. Consideration should be given to providing a clean power source in such a situation.
8. Temperature coefficient (10 μV ~ 300 μV range for the VT-126 and 30 μV ~ 300 μV range for VT-125) is 0.1%/°C TYP.

MAINTENANCE

Removing the CASE

Using a screwdriver, remove the two screw each on the left side, right side and top of the instrument. Open the bottom of the receptacle shaped case to remove the cover. Removal of the four screws retaining the bottom cover will expose the shield.

Selection of Power Line Voltage (See Fig. 4)

To set this instrument up for use with 100, 120V AC re-insert the power line voltage selector plug at the rear panel to appropriate position. Note that for use at 100 or 120V the fuse should be changed to a 0.5A unit.

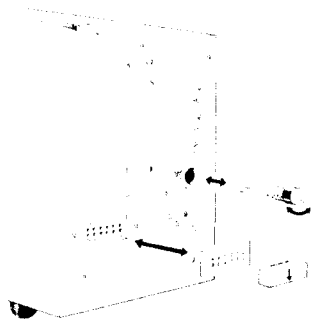

Fig. 4

ADJUSTMENT

Although this instrument is shipped in a calibrated and adjusted state, should recalibration be necessary, perform the procedures outlined below using calibrated instruments after verifying that the line voltage setting is correct.

Meter accuracy adjustment

1. Remove the case and bottom cover.
2. Without applying power mechanically zero the meter using the zero adjustment screw.
3. Using a meter calibrator apply either a 400Hz or 1 kHz signal to the INPUT (4) of this instrument.
4. Set the AVERAGE/PEAK switch (8) to AVERAGE and the WEIGHT switch (9) to FLAT.
5. Set the meter calibrator output to 10 mV and the meter RANGE switch (3) to 10 mV. Adjust VR2 of the Output Unit (X73-1390-00) for a fullscale deflection of 10 mV.
6. Set the meter calibrator output level to 30 mV and the meter range switch to 30 mV. Adjust VR4 on the Input Unit (X73-1380-00) (bottom side) for a fullscale deflection.
   Next set the meter calibrator output level to 1V and the meter range switch to the 1V range. Adjust VR1 of the Input Unit for a fullscale deflection.
7. For adjustment of the 10 μV to 300 μV ranges (30 μV to 300μV ranges for the VT-125), use a calibrated resistive attenuator to obtain an output of 100 μV. Set the meter range to 100 μV and adjust VR2 of the Input Unit for a fullscale deflection.

8. To adjust the 10 μV range of the VT-126, set the calibrator output to 10 μV and set the meter range switch to the 10 μV position. Adjust VR201 of the Input Unit for a fullscale deflection.
9. Depress the AVERAGE/PEAK switch and leave the WEIGHT switches in the FLAT condition. As was done in step 5, adjust VR7 of the Output Unit for a fullscale deflection.
10. Remove the calibrator and connect a wideband oscillator to the INPUT. Set the oscillator frequency to 1 kHz and the meter range switch to 1V. Adjust the oscillator output level for a fullscale deflection in this condition.
11. Shift the oscillator frequency to 100 kHz and use the TC1 on the Input Unit to adjust the meter for fullscale deflection.
12. Repeat the above procedure.

AC-DC OUT adjustment

Depress the AVERAGE/PEAK switch on the panel and leave the WEIGHT switches in the FLAT condition.

AC-OUT adjustment

Apply a signal so that the meter reads for fullscale.
Adjust VR8 so that the AC OUT is 1 Vrms.

DC-OUT adjustment

Short circuit the input and adjust VR10 so that the DC OUT is OV. Apply a signal so that the meter reads for fullscale. Adjust VR9 so that the DC OUT is 1V. Repeat above procedure until the specified value is obtained.

Adjustment of Weighting Filter Reference Level

The reference level of each filter is adjusted so that this level (the 0 dB level on the weighting curve) yields the same measured value as the FLAT conditon. Use a frequency counter to accurately set the frequency of the oscillator for this adjustment.

Weighting	Filter Unit Control	Oscillator frequency	Adjust For.
JIS-A	VR1	1kHz	0 dB indication
DIN NOISE	VR2	1kHz	0 dB indication
DIN AUDIO	VR3	1kHz	0 dB indication
CCIR	VR4	6.3kHz	12.2 dB indication
CCIR/ARM	VR5	6.3kHz	6.6 dB indication

APPENDIX

With regard to CCIR recommendations and DIN 45405 standards for semi-peak detection of noise levels, the following characteristics are specified.

1. One tone burst is to be input and the measured value to be verified to be within the limits summarized below. The tone burst is to be sine wave of 5 kHz frequency. The duration times are listed in the table below.

Tone burst duration (ms)		1	2	5	10	20	50	100	200	8
Measured value (%)		17.0	26.6	40	48	52	59	68	80	100
Allowable range (%)	Lower limit	13.5	22.4	34	41	44	50	58	68	
	Upper limit	21.4	31.6	46	55	60	68	78	92	

2. Input a tone burst signal as shown below and verify a response within the limits shown below. The tone burst frequency is 5 kHz.

Tone burst repetition frequency (Hz)		2	10	100
Measured value (%)		48	77	97
Allowable range (%)	Lower limit (%)	43	72	94
	Upper limit (%)	53	82	100

1) Noise Measurement Filter JIS C1502A, JIS C5551A IEC-A, IHF-A

Frequency (Hz)	Response (dB)	Responsed tolerance (dB)
25	44.6	+ 2.0
31.5	39.2	+ 2.0
40	34.5	+ 2.0
50	30.2	+ 2.0
63	26.1	+ 2.0
80	22.3	+ 2.0
100	19.1	+ 1.0
125	16.1	+ 1.0
160	13.2	+ 1.0
200	10.8	+ 1.0
250	8.6	+ 1.0
315	6.5	+ 1.0
400	4.8	+ 1.0
500	3.2	+ 1.0
630	1.9	+ 1.0
800	0.8	+ 1.0
1000	0	0
1250	+ 0.6	+ 1.0
1600	+ 1.0	+ 1.0

Frequency (Hz)	Response (dB)	Responsed tolerance (dB)
2000	+ 1.2	+ 1.0
2500	+ 1.2	+ 1.0
3150	+ 1.2	+ 1.0
4000	+ 1.0	+ 1.0
5000	+ 0.5	+ 1.0
6300	0.1	+ 1.0
8000	1.1	+ 1.0
10000	2.4	+ 1.0
12500	4.2	+ 2.0
16000	6.5	+ 2.0

2) Noise Measurement Filter DIN 45405 (NOISE)

Frequency (Hz)	Response (dB)	Responsed tolerance (dB)
≤ 20	< 40	
≤ 31.5	< -38	
63	31.6	+ 1.5
100	26.1	+ 1.5
200	17.3	+ 1.5
400	8.8	+ 1.5
800	1.9	+ 1.5
1000	0	+ 0.5
2000	+ 5.3	+ 1.5
4000	+ 8.2	+ 1.5
5000	+ 8.4	+ 0.5
6300	+ 8.0	+ 1.5
7100	+ 7.1	+ 1.5
8000	+ 5.1	+ 2.0
9000	0.3	+ 3、- 2
10000	9.7	+ 3、- 2
16000	< 21	
20000	< - 23	
31500	< 30	

3) Noise Measurement Filter DIN 45405 (AUDIO)

Frequency (Hz)	Response (dB)	Responsed tolerance (dB)
4	≤ 20	
10	≤ 5	
31.5	0	+ 0.5
1000	0	+ 0.5
20000	0	+ 0.5
25000	≤ - 3	
50000	≤ - 40	

4) Noise Measurement Filter (CCIR standard), (Rec. 468-2)

Frequency (Hz)	Response (dB)	Responsed tolerance (dB)
31.5	29.9	+ 2.0
63	23.9	+ 1.4 (1)
100	19.8	+ 1.0
200	- 13.8	+ 0.85(1)
400	- 7.8	+ 0.7 (1)
800	- 1.9	+ 0.55(1)
1000	0	+ 0.5
2000	+ 5.6	+ 0.5 (1)
3150	+ 9.0	+ 0.5 (1)
4000	+ 10.5	+ 0.5 (1)
5000	+ 11.7	+ 0.5
6300	+ 12.2	0
7100	+ 12.0	+ 0.2 (1)
8000	+ 11.4	+ 0.4 (1)
9000	+ 10.1	+ 0.6 (1)
10000	+ 8.1	+ 0.8 (1)
12500	0	+ 1.2 (1)
14000	5.3	+ 1.4 (1)
16000	11.7	+ 1.65(1)

Frequency (Hz)	Response (dB)	Responsed tolerance (dB)
20000	- 22.2	+ 2.0
31500	42.7	+ 2.8 (1) ∞

5) Noise Measurement Filter
(CCIR/ARM standard)

Frequency (Hz)	Response (dB)	Responsed tolerance (dB)
31.5	35.5	+2.0
63	29.5	+1.4
100	25.4	+1.0
200	19.4	+0.85
400	13.4	+0.7
800	7.5	+0.55
1000	5.6	+0.5
2000	0	+0.5
3150	+3.4	+0.5
4000	+4.9	+0.5
5000	+6.1	+0.5
6300	+6.6	0
7100	+6.4	+0.2
8000	+5.8	+0.4
9000	+4.5	+0.6
10000	+2.5	+0.8
12500	5.6	+1.2
14000	10.9	+1.4
16000	17.3	+1.65
20000	27.8	+2

Frequency (Hz)	Response (dB)	Responsed tolerance (dB)
31500	48.3	+2.8 ∞

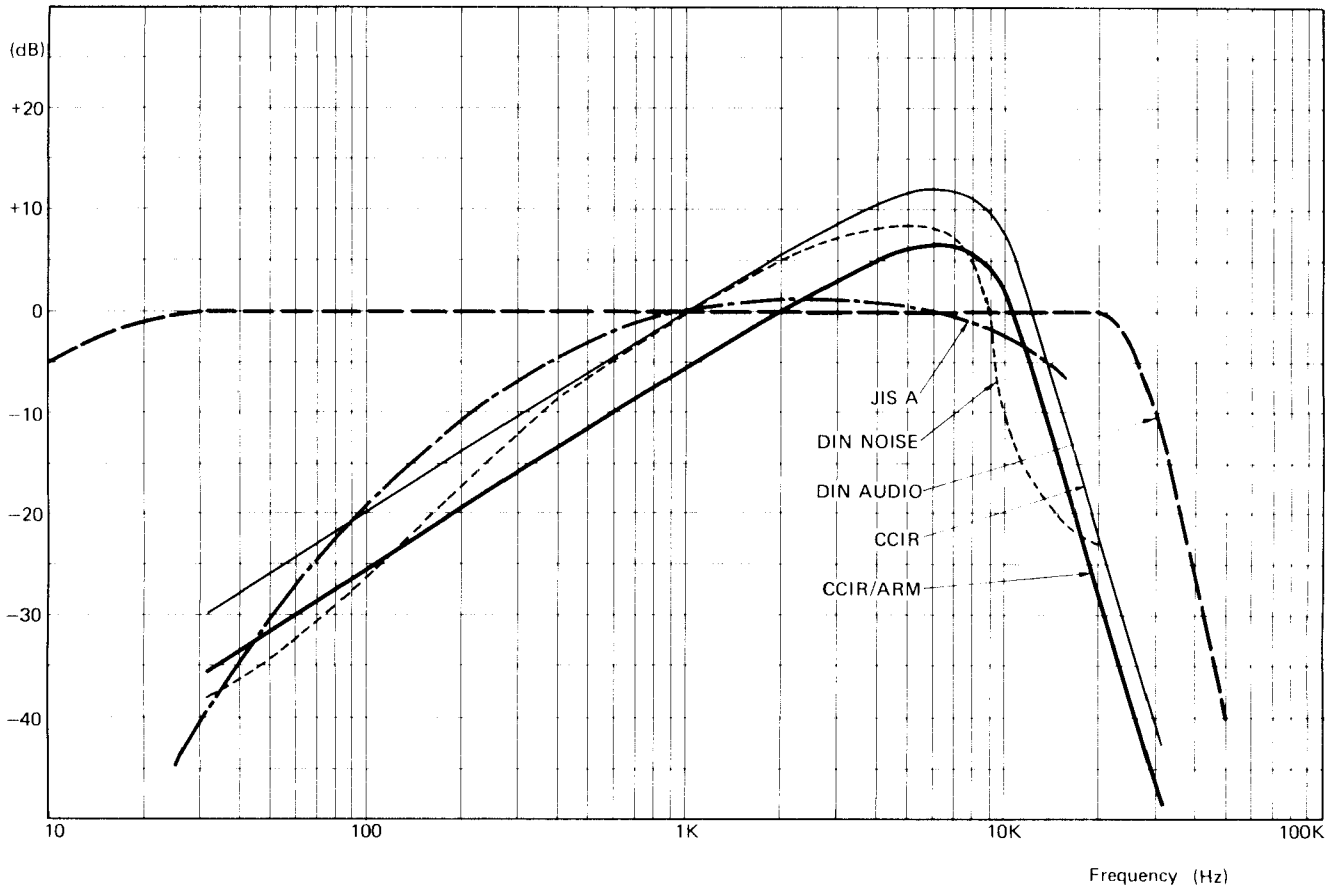

Noise Weighting Characteristics

PARTS LIST

Main Chassis

Ref. No.	Parts No.	Description
	A01-0874-02	Case
	A10-1430-02	Chassis
	A13-0735-03	Frame
	A20-2757-03	Die-casting panel
	A21-0888-04	Decorative panel
	[A21-0889-04]	[Decorative panel]
	A23-1628-03	Rear panel
	A40-0707-03	Bottom plate
	B07-0706-04	Push escutcheon × 8 (square, light grey)
J4	B30-0928-05	Lamp ass'y
J13	B30-0929-05	Lamp ass'y
	B30-0903-15	LED
	B31-0720-05	Meter
	B40-2765-04	Name plate (serial No)
	B41-0708-14	Voltage indicating plate
	B42-1837-04	Plate (for adjustment)
	B50-2936-00	Instruction manual
	B40-2780-04	Name plate (Model VT-126)
	[B40-2782-04]	[Name plate Model VT-125]
	E03-0201-05	Power connector
	E04-0251-05	BNC jack
	E04-0253-05	BNC jack (insulated)
	E08-1081-05	Voltage selector (jack)
	E09-0681-05	Voltage selector (plug)
	E21-0657-04	Metal terminal

Ref. No.	Parts No.	Description
	E22-0381-05	Lug terminal
	E23-0513-05	Eearth lug
	E30-1818-05	JIS power cord
	E31-0537-05	Lead wire with terminal
J1	E31-0763-05	Lead wire with connector
J2	E31-0764-05	Lead wire with connector
J3	E31-0765-05	Lead wire with connector
J5	E31-0766-05	Lead wire with connector
J6	E31-0767-05	Lead wire with connector
J7	E31-0768-05	Lead wire with connector
J8	E31-0769-05	Lead wire with connector
J9	E31-0770-05	Lead wire with connector
J11	E31-0772-05	Lead wire with connector
J12	E31-0773-05	Lead wire with connector
J14	E31-0774-05	Lead wire with connector
J17	E31-0776-05	Lead wire with connector
J18	E31-0777-05	Lead wire with connector
(J19)	(E31-0778-05)	(Lead wire with connector)
	E31-0779-05	Lead wire with connector
	E31-0780-05	Lead wire with connector
	F20-0078-05	Insulate sheet (for TR)
	F29-0014-05	Insulate sheet (for TR)
	F05-5013-05	Fuse 0.5A
	F05-3011-05	Fuse 0.3A
	F01-0824-04	Heat sink
	F10-1547-03	Shield cover
	F10-1548-04	Shield plate
	F15-0703-04	Blind plate
	F19-0703-04	Blind patch (for voltage selector)

[ ] The item bracketed is for VT-125
( ) Unless otherwise specified, all resistors are ±5% and 1/4W
The part indicated with ▲ is installed in the foil side of P.C. board

Ref. No.	Parts No.	Description
	J03-0003-04	Rubber leg
	J10-0082-03	Bezel ass'y
	J10-0038-03	Bezel
	[J10-0084-03]	[Bezel ass'y]
	J13-0033-15	Fuse holder
	J19-1620-05	Cord keeper
	J21-2843-04	Bracket (for meter)
	J21-2931-04	Bracket (for transformer)
	J42-0515-05	Bushing
	J42-0507-04	Bushing (for BNC)
	J61-0049-05	Cable band
	K01-0058-25	Handle
	K21-0840-04	Knob (for RANGE)
	K21-0820-04	Knob (for REFERENCE)
	K27-0504-04	Push knob (square, grey)
	K27-0506-04	Push knob (square, orange)
	K27-0523-04	Push knob (square, grey)
T1	L01-9246-05	Power transformer
S402	S01-1512-05	Rotary switch
	[S101-1513-05]	[Rotary switch]
S401	S40-2509-05	Push switch (for power)
S301	S40-6501-05	Push switch (for AVERAGE/PEAK)
	H01-2925-14	Packing case
	[H01-2928-14]	[Packing case]
	H10-2802-02	Pad (foamed styrene)
	H20-1716-04	Pad (carton)
	H25-0029-04	Polyethylene bag (for fuse)
VR301	R01-1508-05	Variable resistor 1kΩB

Ref. No.	Parts No.	Description
C1	CK45E3D103P	Ceramic capacitor 0.01μF +100%, −0%
IC1		IC FS7915
IC2		IC FS7815
IC3		IC FS7905M
IC4		IC FS7805M
	X73-1380-00	Input unit
	[X73-1380-01]	[Input unit]
	X70-1010-00	Filter unit
	X73-1390-00	Output unit
	X68-1340-00	Power supply unit
	[X68-1340-01]	[Power supply unit]

X73-1380-00 Input unit

Ref. No.	Parts No.	Description			
R1	RN14BK2H9993F	Metal film	999kΩ	±1%	1/2W
R2	RN14BK2E9530F	Metal film	953Ω	±1%	1/4W
R3	RD14BY2H100J	Carbon	10Ω	±5%	1/2W
R4	RD14BB2E101J	Carbon	100Ω		
R5	RS14AB3A682J	Metal film	6.8kΩ	±5%	1W
R6,7	RD14BB2E472J	Carbon	4.7kΩ		
R8 ~ 10	RD14BB2E103J	Carbon	10kΩ		
R11	RD14BB2E472J	Carbon	4.7kΩ		
R12	RD14BB2E103J	Carbon	10kΩ		
R13	RN14BK2E7502F	Metal film	75kΩ	±1%	1/4W
R14	RD14BB2E103J	Carbon	10kΩ		
R15	RD14BB2E331J	Carbon	330Ω		
R16,17	RD14BB2E102J	Carbon	1kΩ		

Ref. No.	Parts No.	Description			
R18	RD14BB2E472J	Carbon	4.7kΩ		
R19	RS14AB3A101J	Metal film	100Ω	±5%	1W
R20,21	RD14BB2E472J	Carbon	4.7kΩ		
R22,23	RD14BB2E103J	Carbon	10kΩ		
R24	RN14BK2E3302F	Metal film	33kΩ	±1%	1/4W
R25	RN14BK2E6202F	Metal film	62kΩ	±1%	1/4W
R26	R92-0798-05	Metal film	47MΩ		
R27	RN14BK2E3301F	Metal film	3.3kΩ	±1%	1/4W
R28	RN14BK2E18R0F	Metal film	18Ω	±1%	1/4W
R30	RN14BK2E13R0F	Metal film	13Ω	±1%	1/4W
R31	RN14BK2E3301F	Metal film	3.3kΩ	±1%	1/4W
R32	RN14BK2E8200F	Metal film	820Ω	±1%	1/4W
R33	RN14BK2E1000F	Metal film	100Ω	±1%	1/4W
R34	RN14BK2E4701F	Metal film	4.7kΩ	±1%	1/4W
R35	RN14BK2E1001F	Metal film	1kΩ	±1%	1/4W
R36	RD14BB2E682J	Carbon	6.8kΩ		
R37	RD14BB2E331J	Carbon	330Ω		
R38	RD14BB2E682J	Carbon	6.8kΩ		
R39	RD14BB2E331J	Carbon	330Ω		
R40,41	RN14BK2E2001F	Metal film	2kΩ	±1%	1/4W
R42	RN14BK2E2700F	Metal film	270Ω	±1%	1/4W
R43	RN14BK2E4701F	Metal film	4.7kΩ	±1%	1/4W
R44,45	RD14BB2E472J	Carbon	4.7kΩ		
R46	RN14BK2E1501F	Metal film	1.5kΩ	±1%	1/4W
R47	R92-0786-05	Metal film	60Ω	±0.5%	
R48	RN14BK2E4110D	Metal film	411Ω	±0.5%	1/4W
R49	RN14BK2E2780D	Metal film	278Ω	±0.5%	1/4W
R50	RN14BK2E4110D	Metal film	411Ω	±0.5%	1/4W
R51	RN14BK2E2780D	Metal film	278Ω	±0.5%	1/4W
R52	RN14BK2E4110D	Metal film	411Ω	±0.5%	1/4W
R53	RN14BK2E1900D	Metal film	190Ω	±0.5%	1/4W
R54	RN14BK2E1400F	Metal film	140Ω	±1%	1/4W
R55	RN14BK2E14R0F	Metal film	14Ω	±1%	1/4W

Ref. No.	Parts No.	Description			
R56	RD14BB2E103J	Carbon	10kΩ		
R57	RD14BB2E101J	Carbon	100Ω		
R58	RD14BB2E103J	Carbon	10kΩ		
R59	RD14BB2E681J	Carbon	680Ω		
R60	RN14BK2E3300F	Metal film	330Ω	±1%	1/4W
R61	RN14BK2E1502F	Metal film	15kΩ	±1%	1/4W
R62,63	RD14BB2E103J	Carbon	10kΩ		
R64,65	RD14BB2E102J	Carbon	1kΩ		
R66	RD14BB2E104J	Carbon	100kΩ		
R67	RD14BB2E102J	Carbon	1kΩ		
R68	RN14BK2E3302F	Metal film	33kΩ	±1%	1/4W
R69	RN14BK2E3301F	Metal film	3.3kΩ	±1%	1/4W
R70	RD14BB2E473J	Carbon	47kΩ		
R71 ~ 74	RN14BK2E1002F	Metal film	10kΩ	±1%	1/4W
R75	RN14BK2E1003F	Metal film	100kΩ	±1%	1/4W
R76	RD14BB2E333J	Carbon	33kΩ		
R77	RD14BB2E681J	Carbon	680Ω		
R78,79	RD14BB2E102J	Carbon	1kΩ		
R80	RD14BB2E101J	Carbon	100Ω		
R81	RD14BB2E561J	Carbon	560Ω		
R82	RD14BB2E564J	Carbon	560kΩ		
R83	RD14BB2E154J	Carbon	150kΩ		
R84	RD14BB2E561J	Carbon	560Ω		
R85	RD14BB2E472J	Carbon	4.7kΩ		
R86	RN14BK2E39R0F	Metal film	39Ω	±1%	1/4W
R87	RD14BB2E124J	Carbon	120kΩ		
R88	RN14BK2E2000F	Metal film	200Ω	±1%	1/4W
(R201					
,R202)	(RN14BK2E2001F)	(Metal film	2kΩ	±1%	1/4W)
(R203)	(RN14BK2E4701F)	(Metal film	4.7kΩ	±1%	1/4W)
(R204					
,R205)	(RD14BB2E472J)	(Carbon	4.7kΩ		)

Ref. No.	Parts No.	Description			
VR1,2	R12-0502-05	Variable resistor 100ΩB			
VR6	R12-3502-05	Variable resistor 33kΩB			
VR7	R12-0058-05	Variable resistor 470ΩB			
(VR201)	(R12-0058-05)	(Variable resistor 470ΩB)			
C1	C91-0550-05	Metalized film	0.15μF		630WV
C2	C91-0553-05	Dipped mica	7.5pF		300WV
C3	CM93BD2A472J	Mica	4700pF	±5%	100WV
C4	CK45D2H471M	Ceramic	470pF	±20%	500WV
C5,6	CE04W1E101M	Electrolytic	100μF		25WV
C7,8	CE04W1H2R2M	Electrolytic	2.2μF		50WV
C9	CE04W1A471M	Electrolytic	470μF		10WV
C10,11	CE04W1E101M	Electrolytic	100μF		25WV
C12	C91-0519-05	Metalized film	1μF		100WV
C13 ~C15	CE04W1E101M	Electrolytic	100μF		25WV
C16	CE04W0J472M	Electrolytic	4700μF		6.3WV
C17	CE04W1A471M	Electrolytic	470μF		10WV
C18	CC45CH1H100D	Ceramic	10pF	±0.5pF	50WV
C19,20	CE04W1E101M	Electrolytic	100μF		25WV
C21,22	CE04W1C470M	Electrolytic	47μF		16WV
C23	CM93BD2A471F	Mica	470pF	±1%	100WV
C24	CM93BD2A241F	Mica	240pF	±1%	100WV
C25,26	CE04W1A471M	Electrolytic	470μF		10WV
C27	CC45CH1H050D	Ceramic	5pF	±0.5pF	50WV
C28	CE04W1A471M	Electrolytic	470μF		10WV
C29,30	CE04W1E101M	Electrolytic	100μF		25WV
C31	CE04W1C470M	Electrolytic	47μF		16WV
C32	CC45CH1H100D	Ceramic	10pF	±0.5pF	50WV
C33	CE04BW1H010M	Electrolytic	1μF		50WV

Ref. No.	Parts No.	Description			
C34~37	CQ93M1H222K	Mylar	2200pF	±10%	50WV
C38,39	CE04W1E101M	Electrolytic	100μF		25WV
C40,41	CQ93M1H104K	Mylar	0.1μF	±10%	50WV
C42~45	CE04W1E470M	Electrolytic	47μF		25WV
C46	CE04W1A471M	Electrolytic	470μF		10WV
C47	CC45CH1H470J	Ceramic	47pF	±5%	50WV
C201	CQ93M1H222K	Mylar	2200pF	±10%	50WV
C202	CQ93BP2A202F	Polypropylen	2000pF	±1%	100WV
C203	CQ93BP2A102F	Polypropylen	1000pF	±1%	100WV
C204	CE04W1A471M	Electrolytic	470μF		10WV
TC1	C05-0416-05	Ceramic trimmer 10pF			
D1,2		Diode	1S1555		
D5,6		Diode	1S1555		
D9~12		Diode	1S1587		
D13~16		Diode	1S1555		
D18,19		Zener diode	WZ-081		
(D201)		(Diode	1S1555)		
Q1		FET	2SK68A(K)		
Q2,3		Transistor	2SC1815(Y)		
Q4		FET	2SK68A(K)		
Q5		Transistor	2SA841(BL)		
Q6		Transistor	2SC495(Y)		

Ref. No.	Parts No.	Description	
Q7		Transistor	2SC1815 (Y)
Q8		Transistor	2SA841 (BL)
Q9		Transistor	2SC1815(Y)
Q10		Transistor	2SA733(Q)
Q11,12		Transistor	2SA841(BL)
Q13,14		Transistor	2SC784(O)
Q15		Transistor	2SA733(Q)
Q16		Transistor	2SA841 (BL)
Q17		FET	2SK30A (GR)
(Q201)		(Transistor)	(2SC1815 (Y))
(Q202)		(Transistor)	(2SA841 (BL))
IC1		IC	TC4066BP or MC14066BCP
IC2		IC	CA3100E
IC3		IC	NJM4558D
		Thermister	SDT-100
RL1	S51-2408-05	Relay	
RL2 ~ 4	S51-1404-05	Relay	
(RL201)	(S51-1404-05)	(Relay)	
P101,102	E40-0673-05	Pin connector 6P	
P103,104	E40-0273-05	Pin connector 2P	
P105	E40-0373-05	Pin connector 3P	
	E23-0046-04	Terminal	
	J25-2927-03	Printed circuit board	
	J32-0821-04	Hex. post	
	N10-2030-46	Hex. nut	

X73-1390-00 Output unit

Ref. No	Parts No.	Description			
R1	RD14BB2E102J	Carbon	1kΩ		
R2	RN14BK2E3301F	Metal film	3.3kΩ	±1%	1/4W
R3	RN14BK2E1000F	Metal film	100Ω	±1%	1/4W
R4	RN14BK2E1002F	Metal film	10kΩ	±1%	1/4W
R5	RN14BK2E3300F	Metal film	330Ω	±1%	1/4W
R6	RD14BB2E472J	Carbon	4.7kΩ		
R7,8	RD14BB2E102J	Carbon	1kΩ		
R9	RD14BB2E472J	Carbon	4.7kΩ		
R10	RN14BK2E3000F	Metal film	300Ω	±1%	1/4W
R11	RD14BB2E103J	Carbon	10kΩ		
R12	RD14BB2E270J	Carbon	27Ω		
R13	RD14BB2E103J	Carbon	10kΩ		
R14	RD14BB2E681J	Carbon	680Ω		
R15	RD14BB2E683J	Carbon	68kΩ		
R16	RD14BB2E104J	Carbon	100kΩ		
R17,18	RD14BB2E561J	Carbon	560Ω		
R19	RN14BK2E3300F	Metal film	330Ω	±1%	1/4W
R20	RN14BK2E20R0F	Metal film	20Ω	±1%	1/4W
R21	RN14BK2E1000F	Metal film	100Ω	±1%	1/4W
R22,23	RD14BB2E151J	Carbon	150Ω		
R24	RN14BK2E4702F	Metal film	4.7kΩ	±1%	1/4W
R25	RN14BK2E1003F	Metal film	100kΩ	±1%	1/4W
R26	RN14BK2E3301F	Metal film	3.3kΩ	±1%	1/4W
R27	RN14BK2E4702F	Metal film	47kΩ	±1%	1/4W
R28,29	RN14BK2E3900F	Metal film	390Ω	±1%	1/4W
R30,31	RD14BB2E472J	Carbon	4.7kΩ		
R32	RN14BK2E1802F	Metal film	18kΩ	±1%	1/4W
R33	RN14BK2E1003F	Metal film	100kΩ	±1%	1/4W
R34	RD14BB2E102J	Carbon	1kΩ		
R35,36	RD14BB2E103J	Carbon	10kΩ		

Ref. No.	Parts No.	Description			
R37	RD14BB2E101J	Carbon	100Ω		
R38	RD14BB2E681J	Carbon	680Ω		
R39	RN14BK2E3900F	Metal film	390Ω	±1%	1/4W
R40	RN14BK2E1502F	Metal film	15kΩ	±1%	1/4W
R41	RD14BB2E152J	Carbon	1.5kΩ		
R42	RD14BB2E472J	Carbon	4.7kΩ		
R43	RN14BK2E5230F	Metal film	523Ω	±1%	1/4W
R44,45	RD14BB2E101J	Carbon	100Ω		
R46	RN14BK2E3002F	Metal film	30kΩ	±1%	1/4W
R47	RN14BK2E5601F	Metal film	5.6kΩ	±1%	1/4W
R48	RN14BK2E3002F	Metal film	30kΩ	±1%	1/4W
R49 ~51	RN14BK2E1002F	Metal film	10kΩ	±1%	1/4W
R52	RN14BK2E9761F	Metal film	9.76kΩ	±1%	1/4W
R53	RN14BK2E6040F	Metal film	604Ω	±1%	1/4W
R54	RD14BB2E105J	Carbon	1MΩ		
R55,56	RD14BB2E101J	Carbon	100Ω		
☆R57	RD14BB2E101J	Carbon	100Ω		
☆R58	RD14BB2E682J	Carbon	6.8kΩ		
☆R59	RD14BB2E123J	Carbon	12kΩ		
R60,61	RN14BK2E1302F	Metal film	13kΩ	±1%	1/4W
☆R62	RD14BB2E560J	Carbon	56Ω		
VR2	R12-0502-05	Variable resistor	100ΩB		
VR3	R12-3041-05	Variable resistor	10KΩ		
VR4,5	R12-0502-05	Variable resistor	100Ω		
VR6	R12-2020-05	Variable resistor	6.8KΩ		
VR7	R12-1037-05	Variable resistor	3.3KΩ		
VR8	R12-0511-05	Variable resistor	220Ω		
VR9	R12-3040-05	Variable resistor	10kΩ		
VR10	R12-0058-05	Variable resistor	470Ω		

Ref. No.	Parts No.	Description			
C1	C91-0551-05	Metalized film	1μF		25WV
C2	CE04W1A471M	Electrolytic	470μF		10WV
C3,4	CE04W1E101M	Electrolytic	100μF		25WV
C5	CE04W1A471M	Electrolytic	470μF		10WV
C6	CE04W1A221M	Electrolytic	220μF		10WV
C7	CC45CH1H100D	Ceramic	10pF	±0.5pF	50WV
C8,9	CE04W1E470M	Electrolytic	47μF		25WV
C10	CE04W1C221M	Electrolytic	220μF		16WV
C11	CM93BD2A300G	Mica	30pF	±2%	100WV
C14	CE04W1C101M	Electrolytic	100μF		16WV
C15	CC45CH1H100D	Ceramic	10pF		50WV
C16	CE04BW1A101N	Electrolytic	100μF		10WV
C17,18	CC45CH1H100D	Ceramic	10pF	±0.5pF	50WV
C19,20	C90-0903-05	Electrolytic	33μF		25WV
C21	CE04W1E101M	Electrolytic	100μF		25WV
C22	CC45CH1H100D	Ceramic	10pF	±0.5pF	50WV
C23	CC45CH1H150J	Ceramic	15pF	±5%	50WV
C24~26	CE04W1E101M	Electrolytic	100μF		25WV
C28~29	CE04W1E101M	Electrolytic	100μF		25WV
C30	CE04W1E470M	Electrolytic	47μF		25WV
C31	CE04W1A221M	Electrolytic	220μF		10WV
D1~5		Diode	1S1588		
D6~8		Diode	1S1555		
D9,10		Zener Diode	WZ-100		
Q1		FET	2SK30A(GR)		
Q2		Transistor	2SA841(BL)		
Q3,4,		Transistor	2SC1815(Y)		
Q5,6		Transistor	2SA841(BL)		
Q7		Transistor	2SC784(O)		
Q8		Transistor	2SC1815(Y)		
Q9		FET	2SK30A(GR)		
Q10,11		Transistor	2SA841(BL)		

Ref. No.	Parts No.	Description			
Q12		Transistor	2SC784(O)		
IC1 ~ 3		IC	CA3100E		
IC4 ~ 6		IC	NJM4558D		
		Thermister	SDT-1000		
	E23-0046-04	Terminal			
P301	E40-0274-05	Pin connector 2P			
P302	E40-0674-05	Pin connector 6P			
P304,305	E40-0474-05	Pin connector 4P			
P306 ~ P308	E40-0373-05	Pin connector 3P			
	J25-2928-03	Printed circuit board			
RL1	S51-2408-05	Relay			

X70-1010-00 Filter unit

Ref. No.	Parts No.	Description			
R1	RD14BB2E102J	Carbon	1kΩ		
R2,3	RN14BK2E1872F	Metal film	18.7kΩ	±1%	1/4W
R4	RN14BK2E7502E	Metal film	75kΩ	±1%	1/4W
R5	RN14BK2E1003F	Metal film	100kΩ	±1%	1/4W
R6	RD14BB2E102J	Carbon	1kΩ		
R7	RN14BK2E1001F	Metal film	1kΩ	±1%	1/4W
R9	RD14BB2E102J	Carbon	1kΩ		
R10,11	RN14BK2E1001F	Metal film	1kΩ	±1%	1/4W
R12	RN14BK2E1002F	Metal film	10kΩ	±1%	1/4W
R13,14	RN14BK2E1102F	Metal film	11kΩ	±1%	1/4W
R15,16	RN14BK2E1302F	Metal film	13kΩ	±1%	1/4W
R17,18	RN14BK2E9101F	Metal film	9.1kΩ	±1%	1/4W
R19	RN14BK2E1102F	Metal film	11kΩ	±1%	1/4W
R20	RN14BK2E5602F	Metal film	56kΩ	±1%	1/4W
R21	RN14BK2E1002F	Metal film	10kΩ	±1%	1/4W
R22	RD14BB2E472J	Carbon	4.7kΩ		
R23	RD14BB2E102J	Carbon	1kΩ		
R24	RN14BK2E1001F	Metal film	1kΩ	±1%	1/4W
R25	RN14BK2E7872F	Metal film	78.7kΩ	±1%	1/4W
R27	RN14BK2E1583F	Metal film	158kΩ	±1%	1/4W
R28 ~ 34	RN14BK2E8201F	Metal film	8.2kΩ	±1%	1/4W
R35	RD14BB2E472J	Carbon	4.7kΩ		
R36	RD14BB2E102J	Carbon	1kΩ		
R37	RN14BK2E1001F	Metal film	1kΩ	±1%	1/4W
R38	RN14BK2E2001F	Metal film	2kΩ	±1%	1/4W
R39,40	RN14BK2E6040F	Metal film	604Ω	±1%	1/4W
R41	RN14BK2E2001F	Metal film	2kΩ	±1%	1/4W
R42	RN14BK2E3001F	Metal film	3kΩ	±1%	1/4W
VR1	R12-1033-05	Variable resistor	2.2KΩB		
VR2	R12-1037-05	Variable resistor	3.3KΩB		
VR3	R12-0060-05	Variable resistor	330ΩB		
VR4,5	R12-1501-05	Variable resistor	1.5KΩB		
C1,2	CQ93BP2A333F	Polypropylen	0.033μF	±1%	100WV
C3	CM93BD2A221F	Mica	220pF	±1%	100WV
C4	CQ93BP2A243F	Polypropylen	0.024μF	±1%	100WV
C5	CQ93BP2A272F	Polypropylen	2700pF	±1%	100WV
C6	CM93BD2A131F	Mica	130pF	±1%	100WV
C7	CQ93BP2A302F	Polypropylen	3000pF	±1%	100WV
C8	CM93BD2A271F	Mica	270pF	±1%	100WV
C9	CQ93BP2A102F	Polypropylen	1000pF	±1%	100WV
C10	CM93BD2A390G	Mica	39pF	±2%	100WV
C11	CQ93BP2A332F	Polypropylen	3300pF	±1%	100WV

Ref. No.	Parts No.	Description			
C12	CM93BD2A820F	Mica	82pF	±1%	100WV
C13	CQ93BP2A102F	Polypropylen	1000pF	±1%	100WV
C15	CQ93BP2A682F	Polypropylen	6800pF	±1%	100WV
C16	CQ93BP2A272F	Polypropylen	2700pF	±1%	100WV
C17	CM93BD2A471F	Mica	470pF	±1%	100WV
C18	CQ93BP2A103F	Polypropylen	0.01μF	±1%	100WV
C19	CQ93BP2A333F	Polypropylen	0.033μF	±1%	100WV
C20	CQ93BP2A102F	Polypropylen	1000pF	±1%	100WV
C21,22	CQ93BP2A114F	Polypropylen	0.11μF	±1%	100WV
C23	CQ93BP2A112F	Polypropylen	1100pF	±1%	100WV
C24	CQ93BP2A122F	Polypropylen	1200pF	±1%	100WV
C25	CQ93BP2A132F	Polypropylen	1300pF	±1%	100WV
C26	CM93BD2A391F	Mica	390pF	±1%	100WV
C27	CQ93BP2A362F	Polypropylen	3600pF	±1%	100WV
C28	CM93BD2A181F	Mica	180pF	±1%	100WV
C29	CQ93BP2A182F	Polypropylen	1800pF	±1%	100WV
C30	CQ93BP2A123F	Polypropylen	0.012μF	±1%	100WV
C31	CQ93BP2A682F	Polypropylen	6800pF	±1%	100WV
C32	CQ93BP2A203F	Polypropylen	0.02μF	±1%	100WV
C33	CQ93BP2A303F	Polypropylen	0.03μF	±1%	100WV
C34	CQ93BP2A102F	Polypropylen	1000pF	±1%	100WV
C35	CQ93BP2A822F	Polypropylen	8200pF	±1%	100WV
C36	CQ93BP2A152F	Polypropylen	1500pF	±1%	100WV
C37	CQ93BP2A303F	Polypropylen	0.03μF	±1%	100WV
C38～41	CE04W1E101M	Electrolytic	100μF		25WV
C42	CM93BD2A391F	Mica	390pF	±1%	100WV
L1	L33-0802-05	Relay	12.9mH G		
L2	L33-0803-05	Relay	26.5mH G		
Q1,2		Transistor	2SC1815(Y)		

Ref. No.	Parts No.	Description	
IC1		IC	TL082
IC2,3		IC	NJM4558D
IC4		IC	TL082
IC5,6		IC	NJM4558D
S201	S42-6503-05	Push switch	
	E23-0046-04	Terminal	
P201	E40-0274-05	Pin connector 2P	
P202	E40-0974-05	Pin connector 9P	
P203	E40-0373-05	Pin connector 3P	
P204	E40-0974-05	Pin connector 9P	
P205	E40-0374-05	Pin connector 3P	
	J25-2926-03	Printed circuit board	

X68-1340-00 Power supply unit

Ref. No.	Parts No.	Description	
R1	RD14BB2E103J	Carbon	10kΩ
R2	RD14BB2E472J	Carbon	4.7kΩ
R3	RD14BB2E103J	Carbon	10kΩ
R4	RD14BB2E472J	Carbon	4.7kΩ
R5	RD14BB2E103J	Carbon	10kΩ
R6	RD14BB2E472J	Carbon	4.7kΩ

Ref. No.	Parts No.	Description			
R7	RD14BB2E103J	Carbon	10kΩ		
R8	RD14BB2E472J	Carbon	4.7kΩ		
R9 ~ 14	RD14BB2E124J	Carbon	120kΩ		
R15 ~ 19	RD14BB2E101J	Carbon	100Ω		
R20,21	RD14BB2E102J	Carbon	1kΩ		
R22	RD14BB2E104J	Carbon	100kΩ		
R23	RD14BB2E101J	Carbon	100Ω		
R24 ~ 26	RD14BB2E124J	Carbon	120kΩ		
R27	RD14BB2E123J	Carbon	12kΩ		
R28	RD14BB2E272J	Carbon	2.7kΩ		
(R201)	(RD14BB2E103J)	(Carbon	10kΩ)		
(R202)	(RD14BB2E472J)	(Carbon	4.7kΩ)		
(R203)	(RD14BB2E101J)	(Carbon	100Ω)		
C1,2	CE04W1V222M	Electrolytic	2200μF		35WV
C3 ~ 6	CQ93M1H104K	Mylar	0.1μF	±10%	50WV
C7,8	CE04W1E101M	Electrolytic	100μF		25WV
C9,10	CE04W1C470M	Electrolytic	47μF		16WV
C11	CE04W1E221M	Electrolytic	220μF		25WV
D1		Diode	S1RBA40		
D2 ~ 50		Diode	1S1555		
(D201)	1S1555	(Diode)	(1S1555)		
Q1 ~ 7		Transistor	2SA841(BL)		
Q8 ~ 10		Transistor	2SC1815(Y)		

Ref. No.	Parts No.	Description
(Q201)		(Transistor) (2SA841 (BL))
RL1	S51-1404-05	Relay
	T25-2929-03	Printed circuit board
	E23-0046-04	Terminal
P401	E40-1273-05	Pin connector 12P
P402,403	E40-0473-05	Pin connector 4P
P404	E40-1274-05	Pin connector 12P
P405	E40-0473-05	Pin connector 4P
P406	E40-0332-05	Pin connector 3P
P407	E40-1273-05	Pin connector 12P
P408	E40-0573-05	Pin connector 5P
P409	E40-1273-05	Pin connector 12P
P410	E40-0573-05	Pin connector 5P
P411	E40-1273-05	Pin connector 12P
P412	E40-1173-05	Pin connector 11P

P.C. BOARD

X73-1380-00

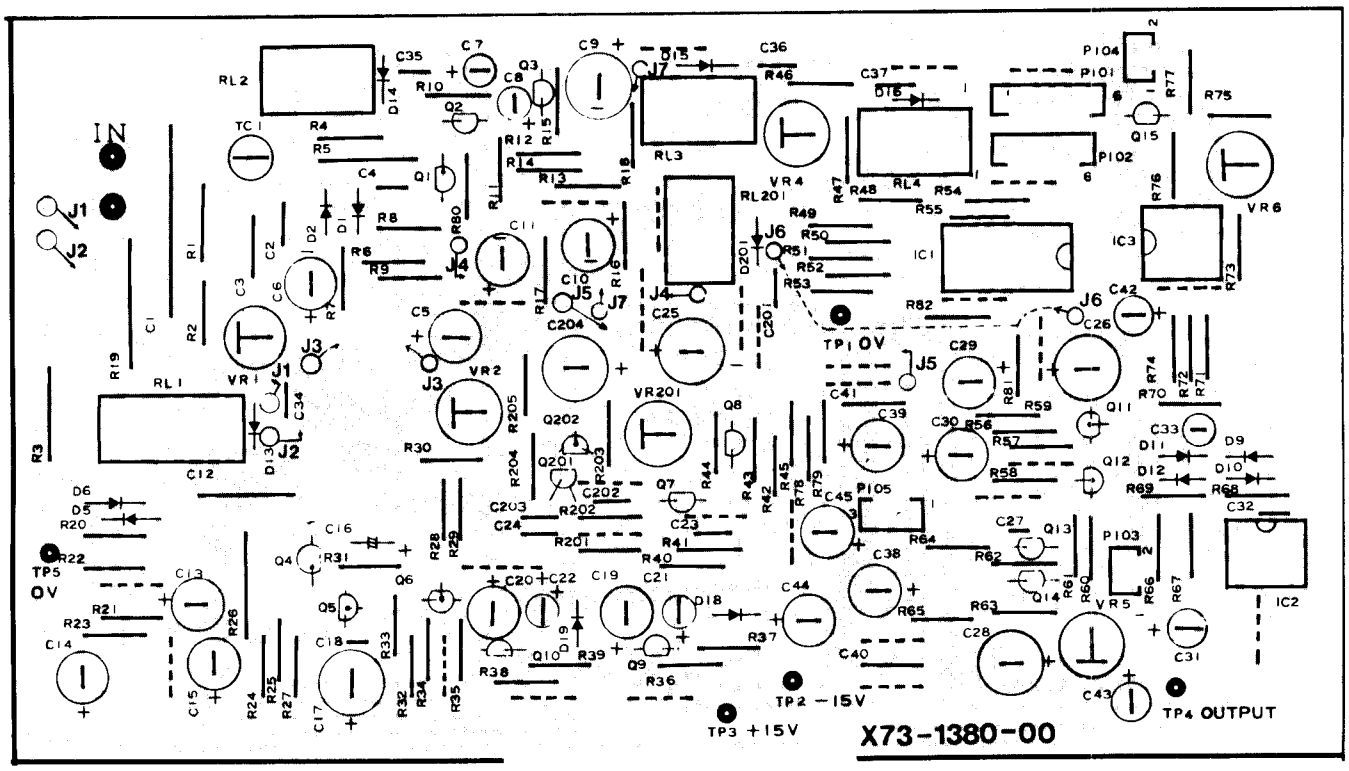

CIRCUIT DIAGRAM

X73-1380-00

The parts whose part Nos. are 200 or more are not used in VT-125.

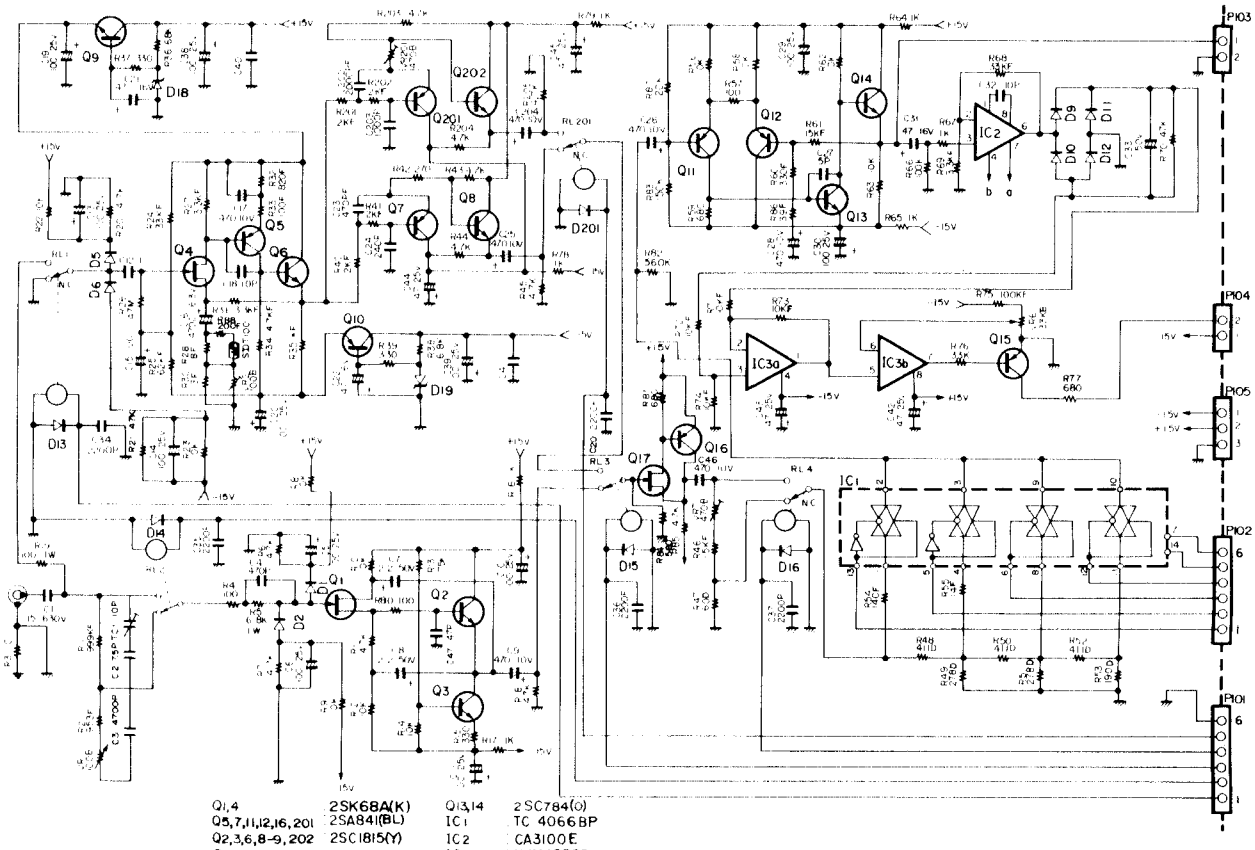

P.C. BOARD

X73-1390-00

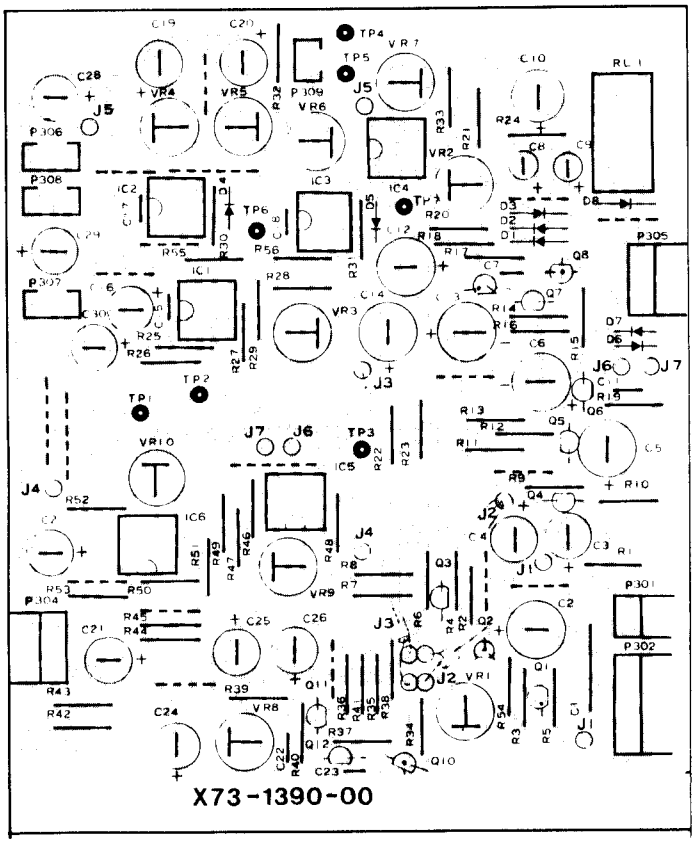

CIRCUIT DIAGRAM

X73-1390-00

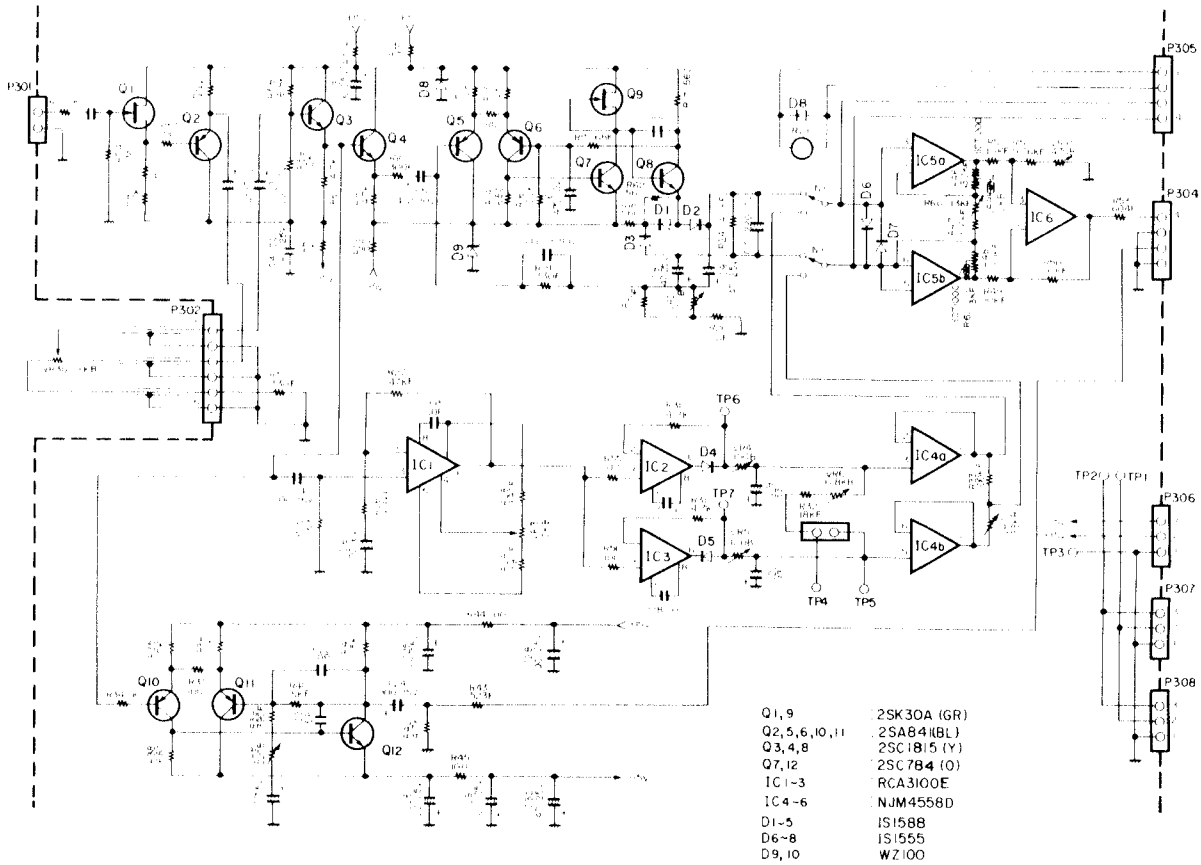

P.C. BOARD

X70-1010-00

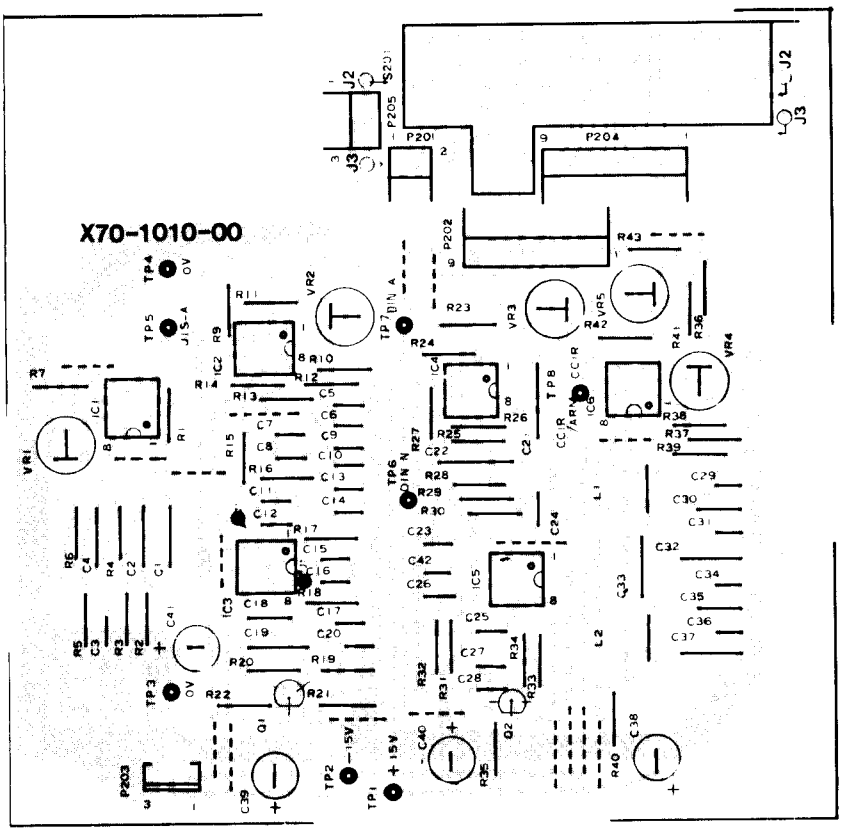

CIRCUIT DIAGRAM

X-70-1010-00

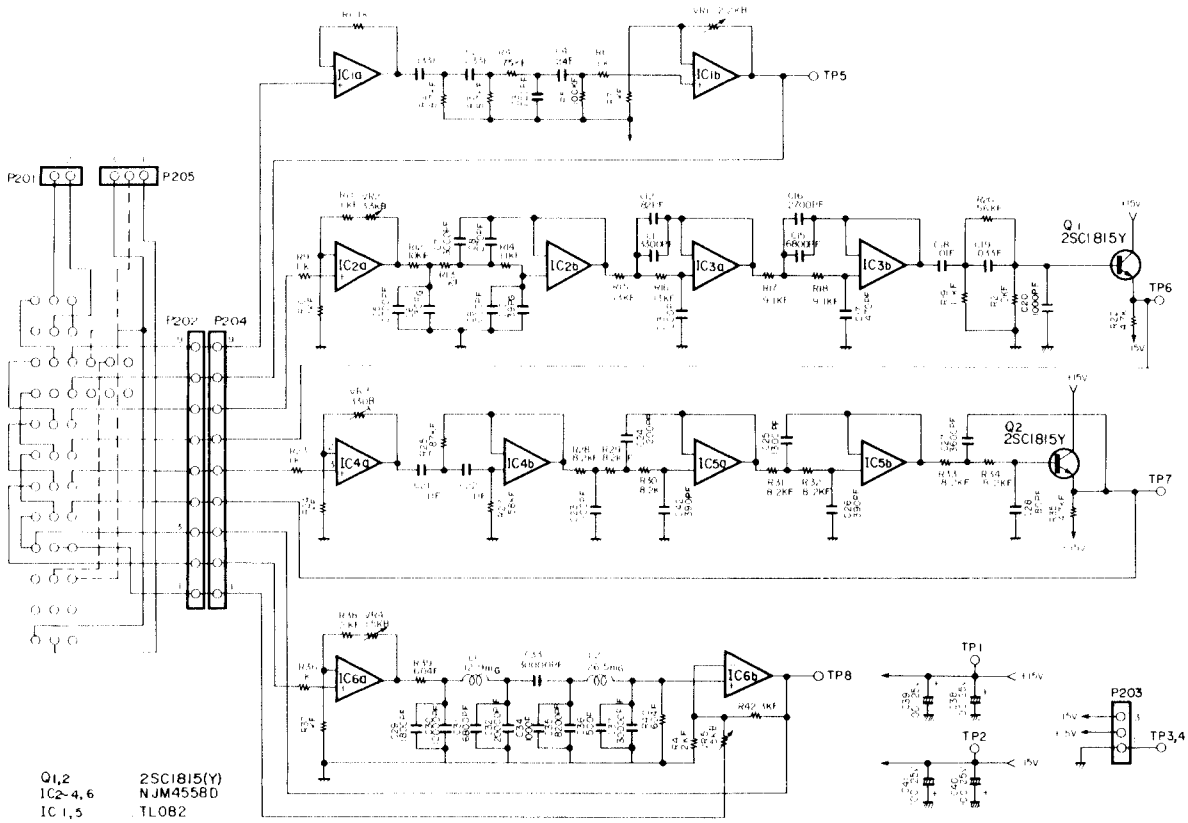

P.C. BOARD

X-68-1340-00

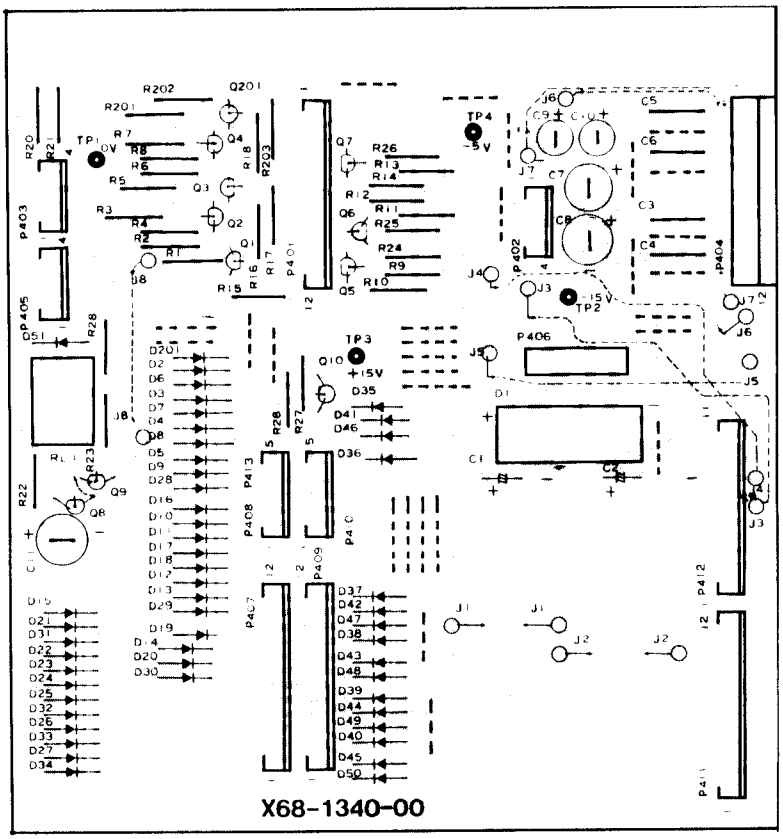

CIRCUIT DIAGRAM

X-68-1340-00

The parts whose part Nos. are 200 or more are not used in VT-125.

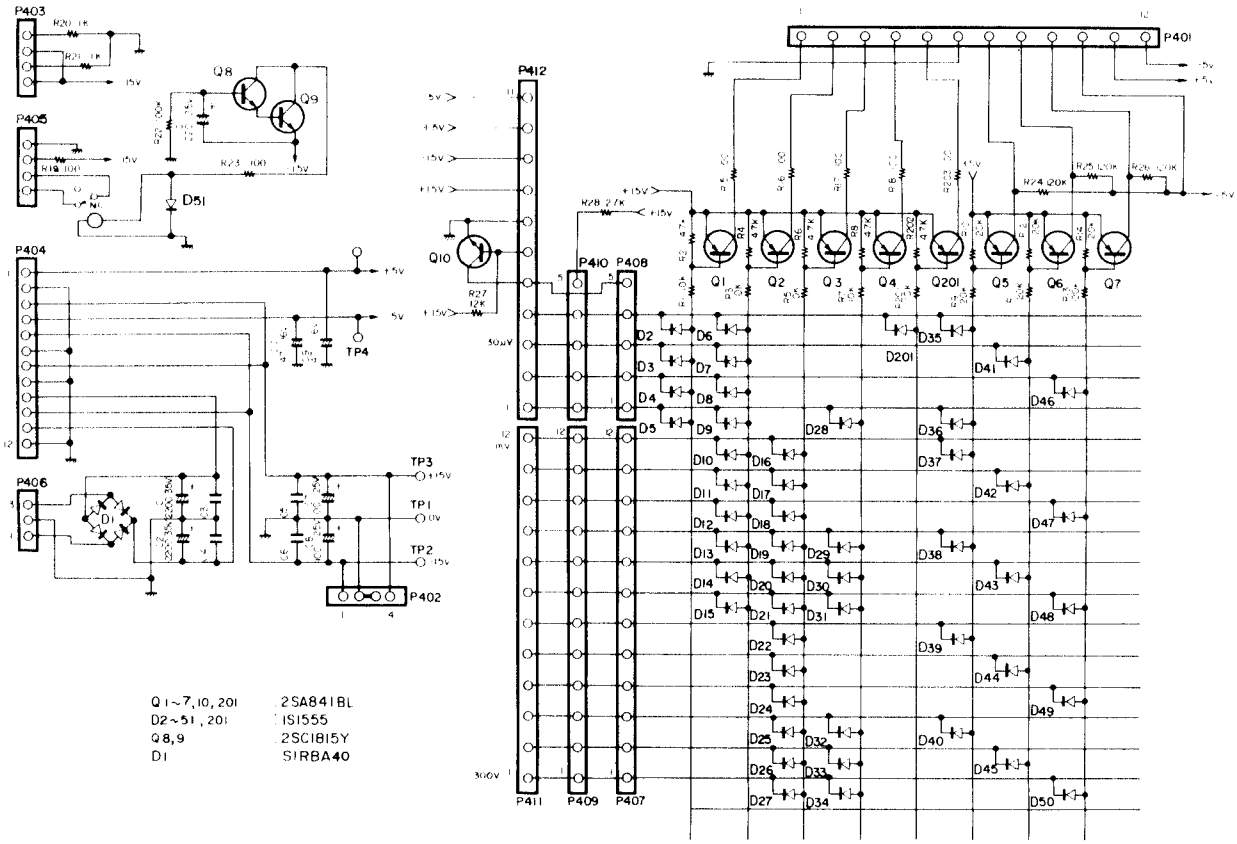

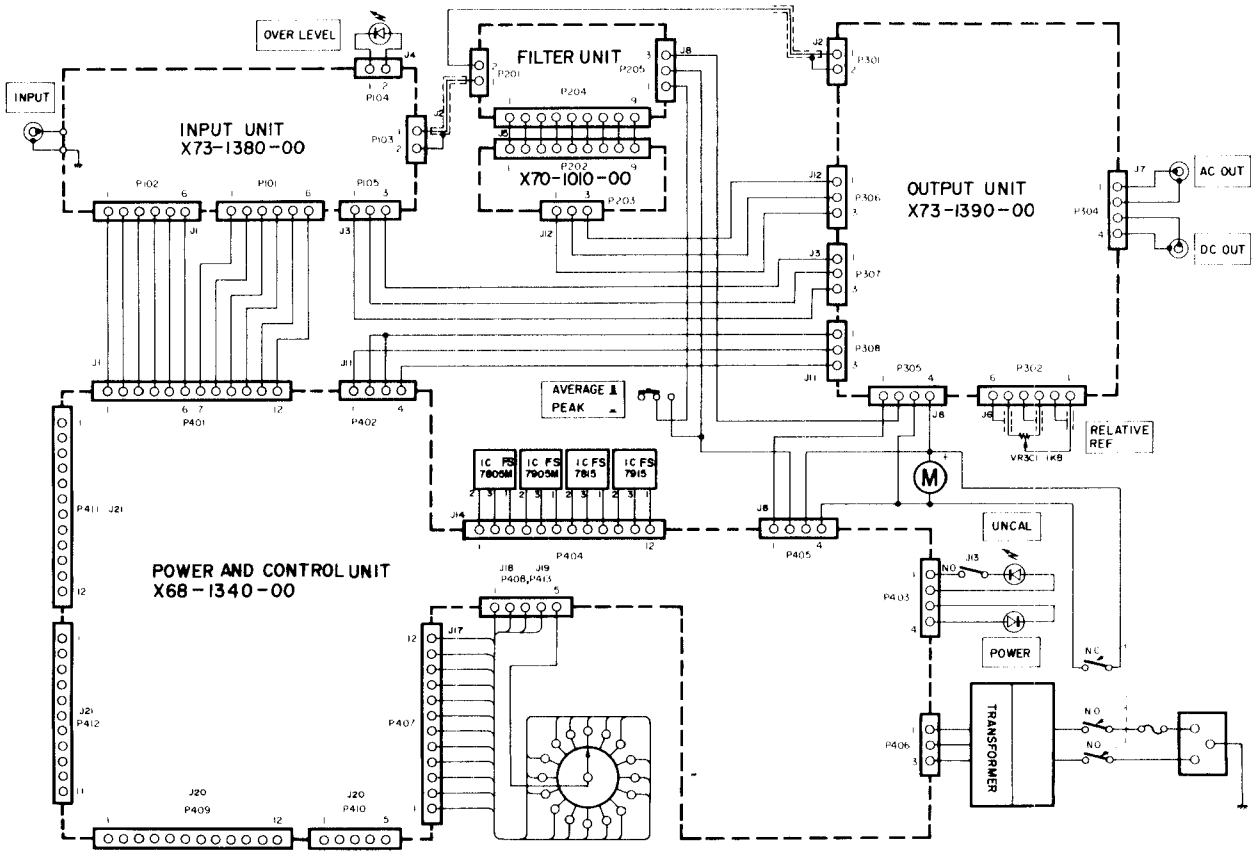
OVER LEVEL
INPUT
INPUT UNIT
X73-1380-00
FILTER UNIT
X70-1010-00
OUTPUT UNIT
X73-1390-00
AC OUT
DC OUT
AVERAGE
PEAK
RELATIVE REF
UNCAL
POWER
TRANSFORMER
POWER AND CONTROL UNIT
X68-1340-00

MEMO

MEMO

P.C. BOARD

★ On the foil side view

X73-1380-00

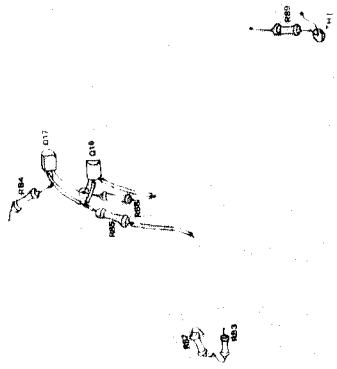

X73-1390-00

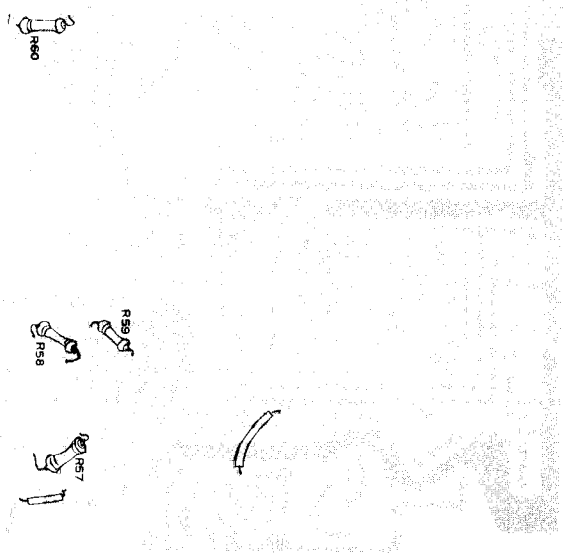

MEMO

A product of
TRIO-KENWOOD CORPORATION
17-15, 2-chome, Shibuya, Shibuya-ku, Tokyo, 250, Japan

05111 PRINTED IN JAPAN B50-2936-00

CONTROLS AND INDICATORS

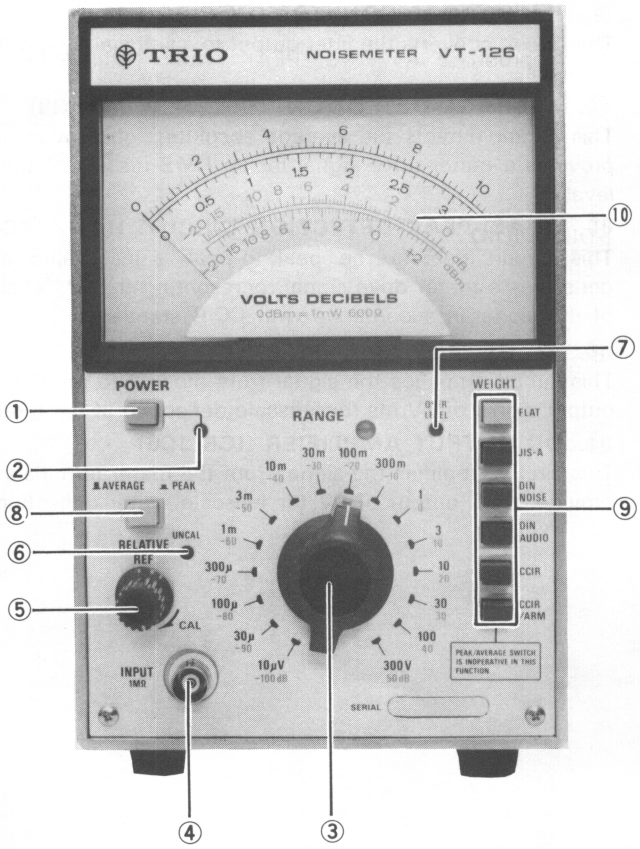

Fig. 1

FRONT PANEL

1. POWER

AC power switch.

2. POWER LAMP

Indicates the VT-126 (VT-125) is powered up. Lights when POWER is depressed.

3. RANGE

Attenuator selector switch. 16 positions (15 for the VT-125) in 10 dB steps. To prevent excessive inputs, this switch is started in the highest, 300V range and gradually worked down range to provide an easily readable meter deflection.

4. INPUT

BNC signal input connector.

5. RELATIVE REF AND 6. UNCAL LAMP

Sensitivity adjustment and uncalibrated annunciator. More than 10 dB of adjustment is possible. When the control is turned fully clockwise, the set range is calibrated. This control can be used to adjust the meter to an appropriate level for relative measurements. When not set at fully clockwise the UNCAL lamp lights to warn the operator.

7. OVERLEVEL

When using weighting filters the effect of the filter is to mask from the operator the presence of an excessively high input level. Thus distortion and the resulting errors can occur without the operator being aware of this condition. To

CIRCUIT DESCRIPTION

①. FIRST ATTENUATOR

A resistive divider attenuator which is relay switched between 0 dB (10 μV ~ 300 mV range) and −60 dB (1V ~ 300V range). For the other ranges it is not in the circuit.

③. IMPEDANCE CONVERSION CIRCUIT (Q1 ~ Q3)

Used to convert the output of the first attenuator to a sufficiently low impedance to drive the second attenuator. An FET input voltage follower is used in this circuit. (1 mV ~ 300V range)

⑤. SECOND ATTENUATOR

A resistive divider attenuator in two sections, 0 dB or −30 dB relay selected and 0/−10/−20/−30 dB four step FET switched selected section. This attenuator outputs a 1 mVrms signal for fullscale meter deflection.

② AND ④ PRE-AMPLIFIER AND FILTER (Q4~Q8, Q201,Q202). For the 10 μV, 30 μV, 100 μV and 300 μV ranges the signal is amplified 100 times and passed to the filter. (Q201 and Q202 is not used in VT-125)

⑥. MAIN AMPLIFIER (Q11 ~ Q14)

A wideband non-inverting amplifier with a differential input of high impedance and low output impedance. The gain in 40 dB and the output is 40 mVrms for a fullscale deflection.

⑦. FILTER AND FILTER SELECTION CIRCUIT

FLAT, DIN NOISE, DIN AUDIO, CCIR and CCIR/ARM weighting filters and the associated selection circuitry.

⑧. OVERLEVEL CIRCUIT (IC2, IC3, Q15)

This circuit uses peak detection of a full-wave rectified signal to detect excessively high signal input levels. An LED display warns of excessively high input.

⑨. IMPEDANCE CONVERSION CIRCUIT

This circuit converts the filter output to a sufficiently low impedance.

⑩. AVERAGE DETECTION CIRCUIT (Q4 ~ Q9)

This circuit detects the average absolute signal value and provides a meter drive signal for an RMS display of signal level.

⑪. QUASI-PEAK DETECTION CIRCUIT (IC1 ~ IC4)

This circuit detects the peak-to-peak signal value and generates a meter drive signal representing the RMS value of the signal in accordance with CCIR standards.

⑫. AC OUTPUT AMPLIFIER (Q10 ~ Q12)

This circuit amplifies the signal from block ⑨ to provide an output signal of 1Vrms for fullscale deflection of the meter.

⑬. DC OUTPUT AMPLIFIER (IC5, IC6)

This circuit amplifies the signal from the meter terminals to provide a DC output of 1V for fullscale meter deflection.

Ref. No.	Parts No.	Description			
R7	RD14BB2E103J	Carbon	10kΩ		
R8	RD14BB2E472J	Carbon	4.7kΩ		
R9～14	RD14BB2E124J	Carbon	120kΩ		
R15～19	RD14BB2E101J	Carbon	100Ω		
R20,21	RD14BB2E102J	Carbon	1kΩ		
R22	RD14BB2E104J	Carbon	100kΩ		
R23	RD14BB2E101J	Carbon	100Ω		
R24～26	RD14BB2E124J	Carbon	120kΩ		
R27	RD14BB2E123J	Carbon	12kΩ		
R28	RD14BB2E272J	Carbon	2.7kΩ		
(R201)	(RD14BB2E103J)	(Carbon	10kΩ)		
(R202)	(RD14BB2E472J)	(Carbon	4.7kΩ)		
(R203)	(RD14BB2E101J)	(Carbon	100Ω)		
C1,2	CE04W1V222M	Electrolytic	2200μF		35WV
C3～6	CQ93M1H104K	Mylar	0.1μF	±10%	50WV
C7,8	CE04W1E101M	Electrolytic	100μF		25WV
C9,10	CE04W1C470M	Electrolytic	47μF		16WV
C11	CE04W1E221M	Electrolytic	220μF		25WV
D1		Diode	S1RBA40		
D2～50		Diode	1S1555		
(D201)	1S1555	(Diode)	(1S1555)		
Q1～7		Transistor	2SA841(BL)		
Q8～10		Transistor	2SC1815(Y)		

Ref. No.	Parts No.	Description
(Q201)		(Transistor) (2SA841 (BL))
RL1	S51-1404-05	Relay
	T25-2929-03	Printed circuit board
	E23-0046-04	Terminal
P401	E40-1273-05	Pin connector 12P
P402,403	E40-0473-05	Pin connector 4P
P404	E40-1274-05	Pin connector 12P
P405	E40-0473-05	Pin connector 4P
P406	E40-0332-05	Pin connector 3P
P407	E40-1273-05	Pin connector 12P
P408	E40-0573-05	Pin connector 5P
P409	E40-1273-05	Pin connector 12P
P410	E40-0573-05	Pin connector 5P
P411	E40-1273-05	Pin connector 12P
P412	E40-1173-05	Pin connector 11P

P.C. BOARD

X73-1380-00

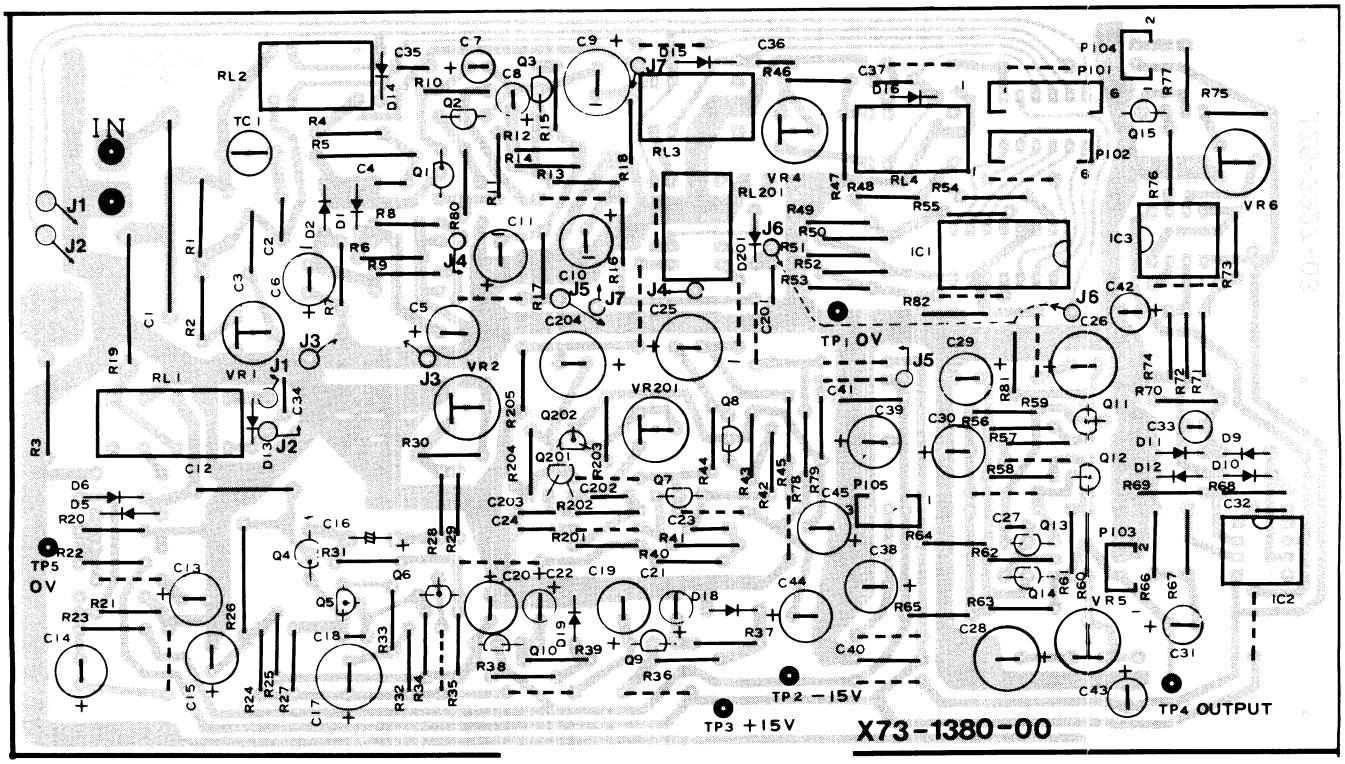

CIRCUIT DIAGRAM

X73-1380-00

The parts whose part Nos. are 200 or more are not used in VT-125.

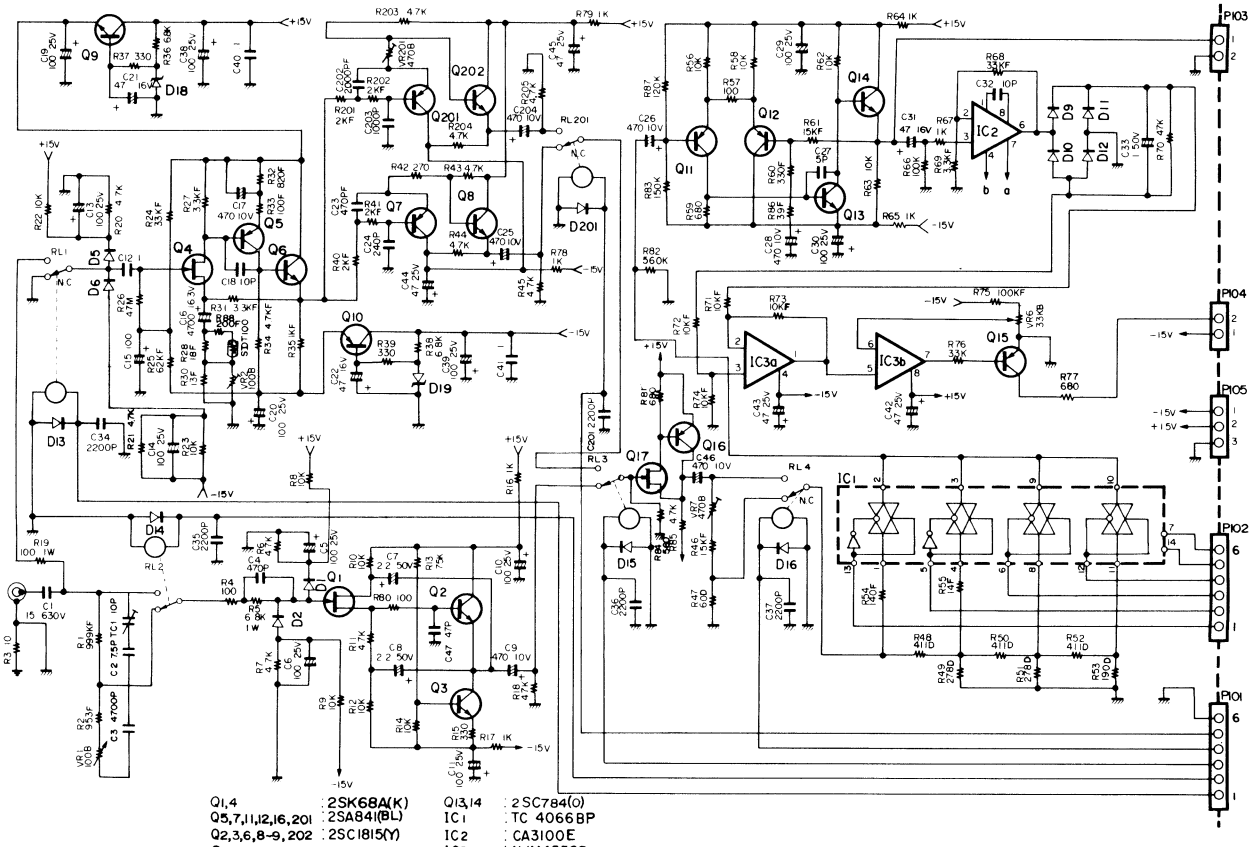

Q1,4	: 2SK68A(K)	Q13,14	: 2SC784(O)
Q5,7,11,12,16,201	: 2SA841(BL)	IC1	: TC 4066BP
Q2,3,6,8~9,202	: 2SC1815(Y)	IC2	: CA3100E
Q17	: 2SK30A(GR)	IC3	: NJM4558D
D1,2,5,6,13~16,201	: 1S1555	D18,19	: WZ-081
D9~12	: 1S1587		

P.C. BOARD

X73-1390-00

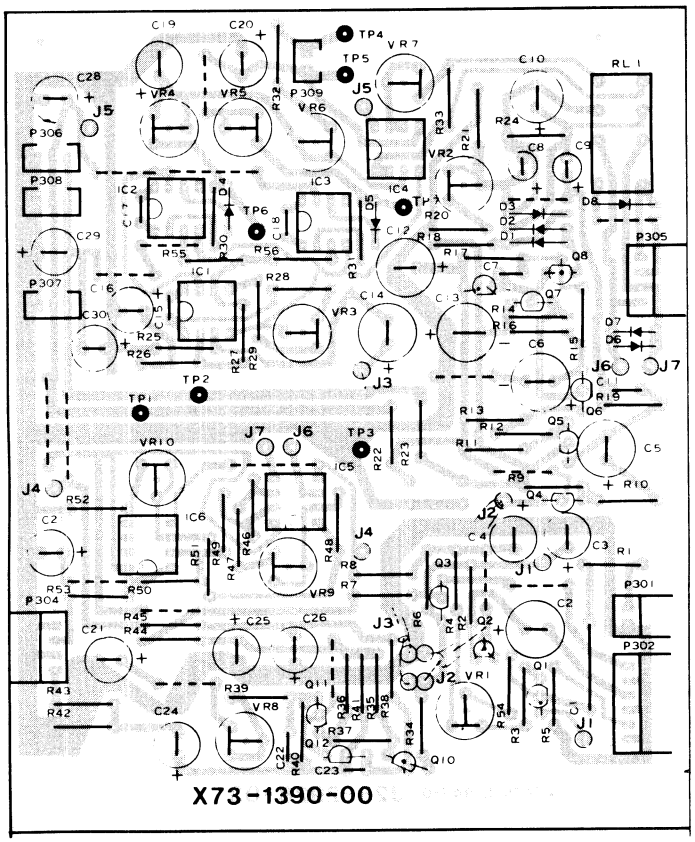

CIRCUIT DIAGRAM

X73-1390-00

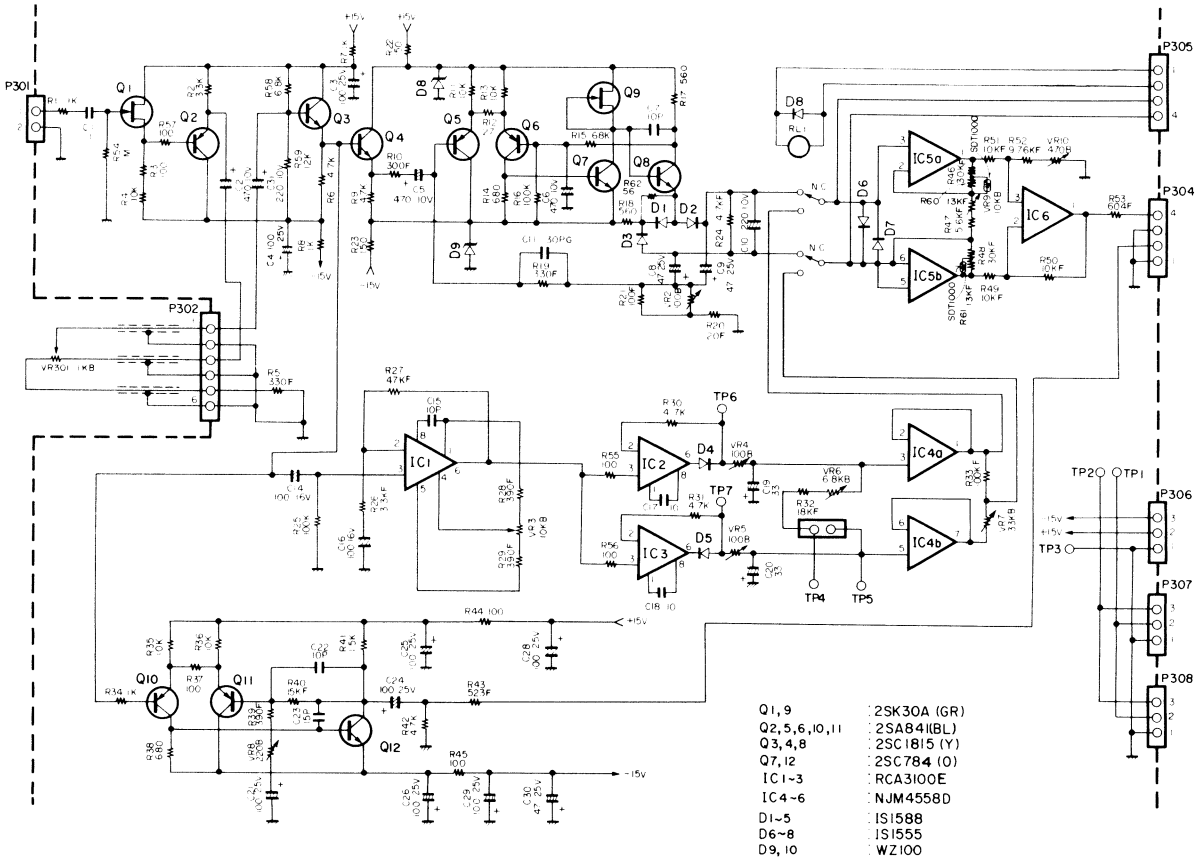

P.C. BOARD

X70-1010-00

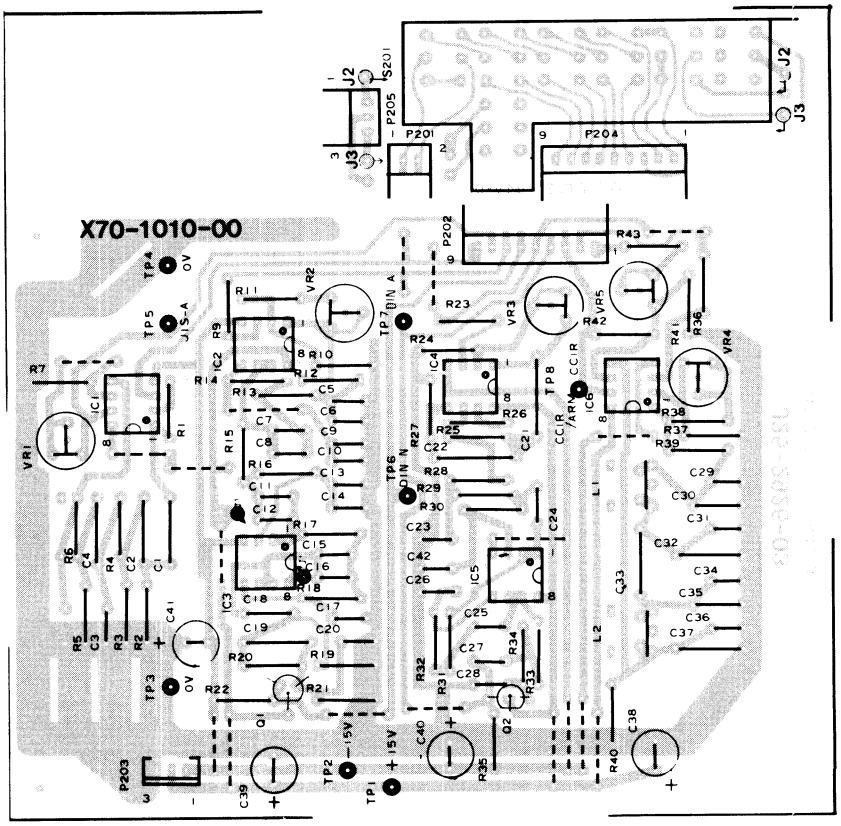

CIRCUIT DIAGRAM

X-70-1010-00

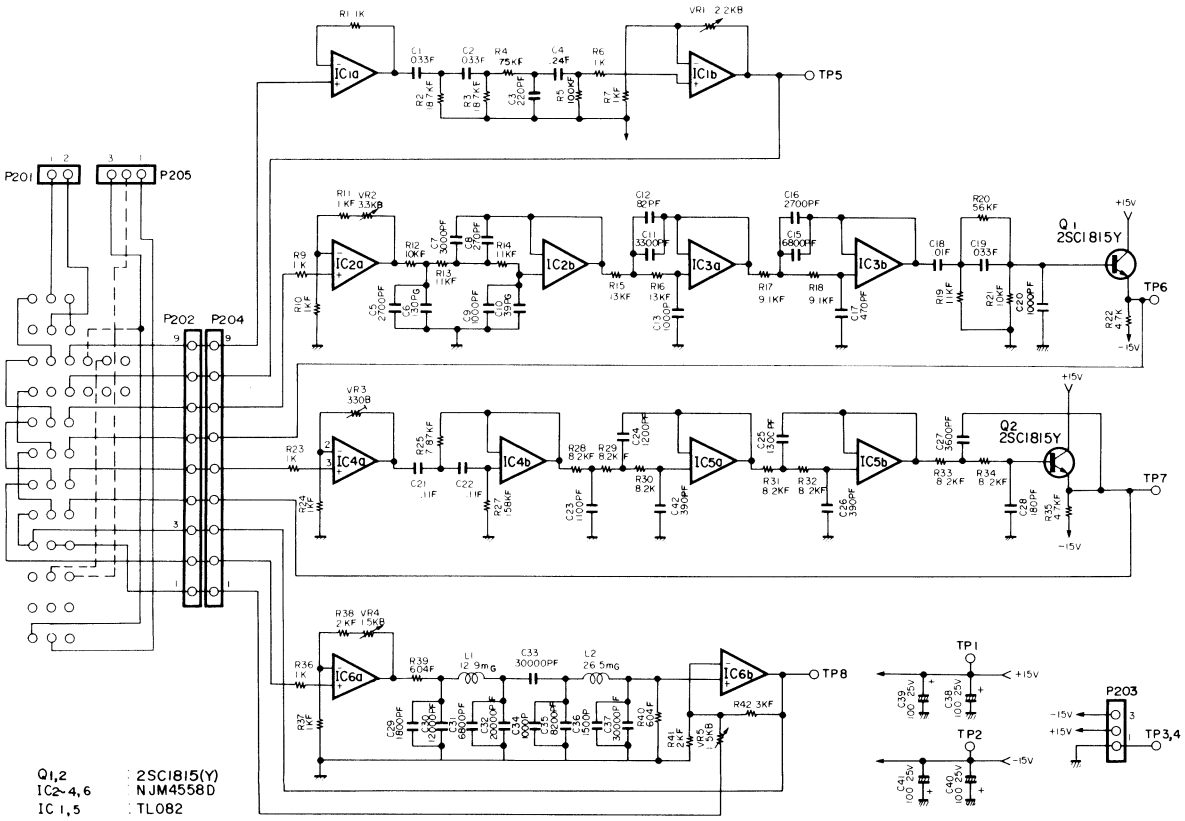

P.C. BOARD

X-68-1340-00

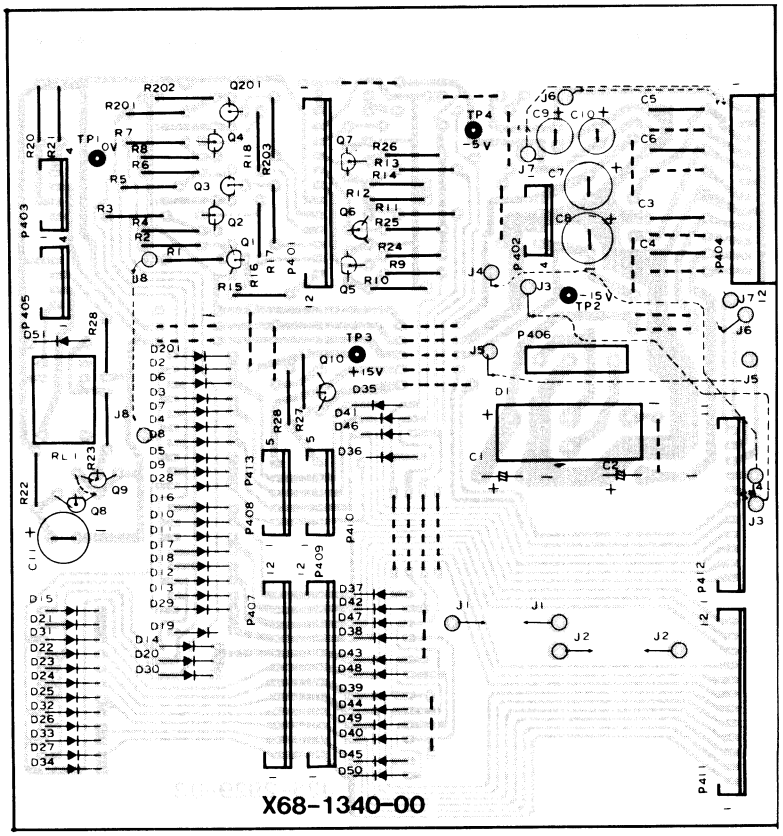

CIRCUIT DIAGRAM

X-68-1340-00

The parts whose part Nos. are 200 or more are not used in VT-125.

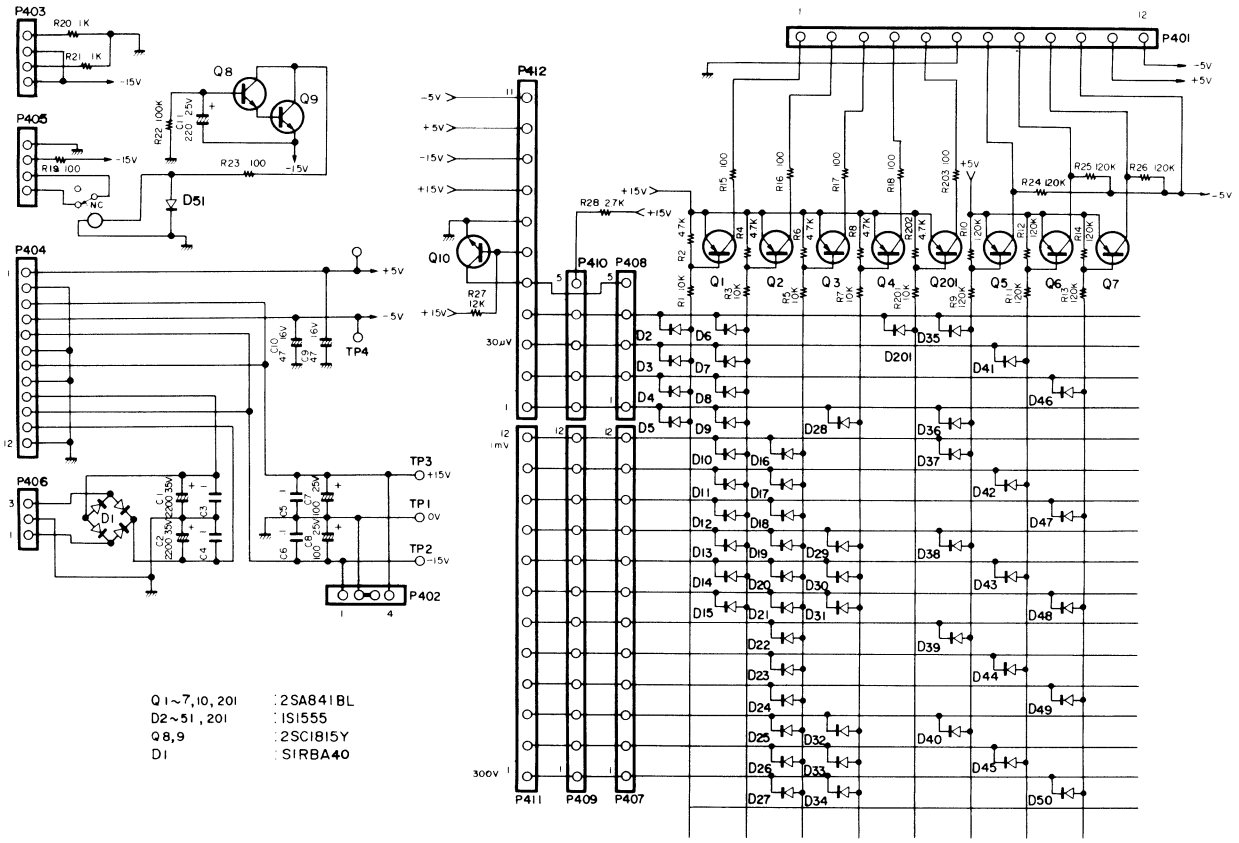

Q1~7, 10, 201	2SA841BL
D2~51, 201	1S1555
Q8, 9	2SC1815Y
D1	S1RBA40

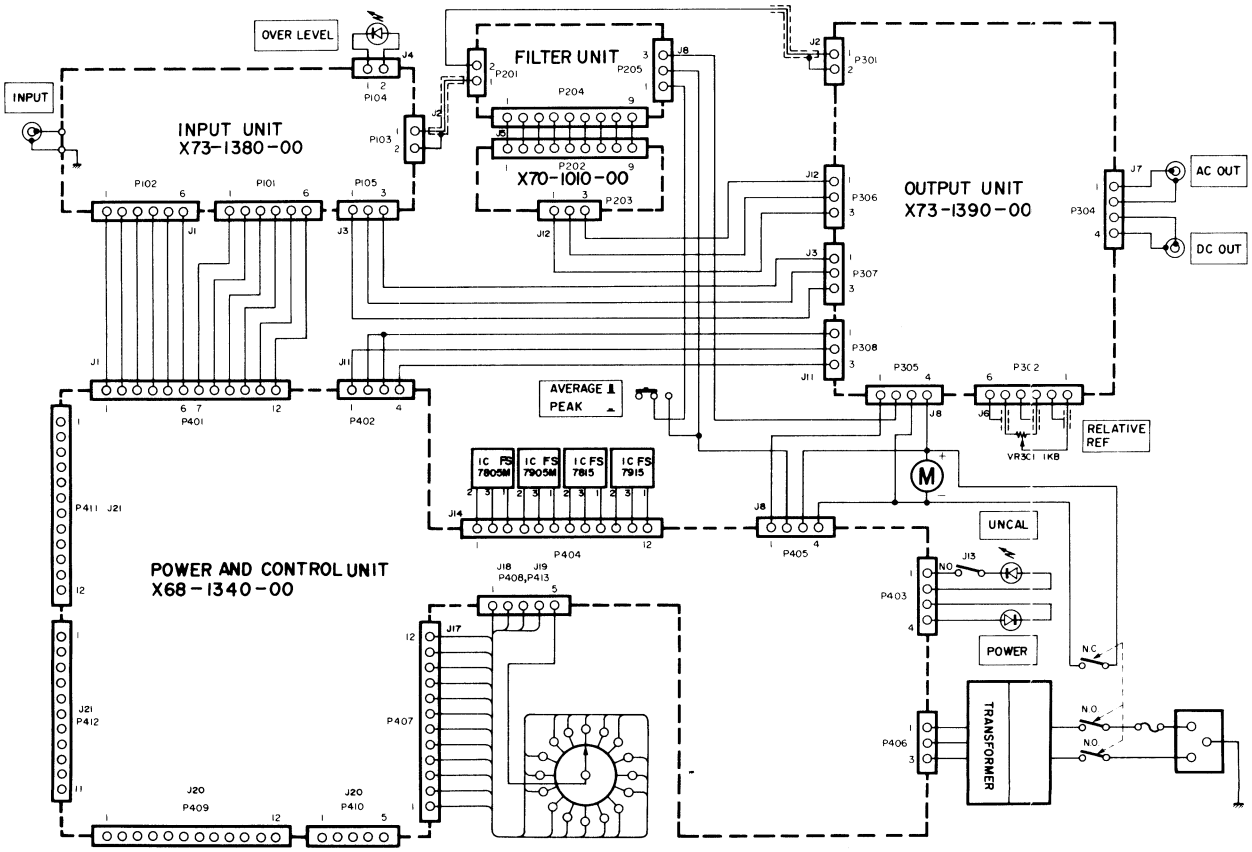
OVER LEVEL
INPUT
INPUT UNIT
X73-1380-00
FILTER UNIT
X70-1010-00
OUTPUT UNIT
X73-1390-00
AC OUT
DC OUT
AVERAGE
PEAK
RELATIVE REF
VR301 1KB
IC FS 7805M
IC FS 7905M
IC FS 7815
IC FS 7915
UNCAL
POWER
TRANSFORMER
POWER AND CONTROL UNIT
X68-1340-00

MEMO

MEMO

P.C. BOARD

★ On the foil side view

X73-1380-00

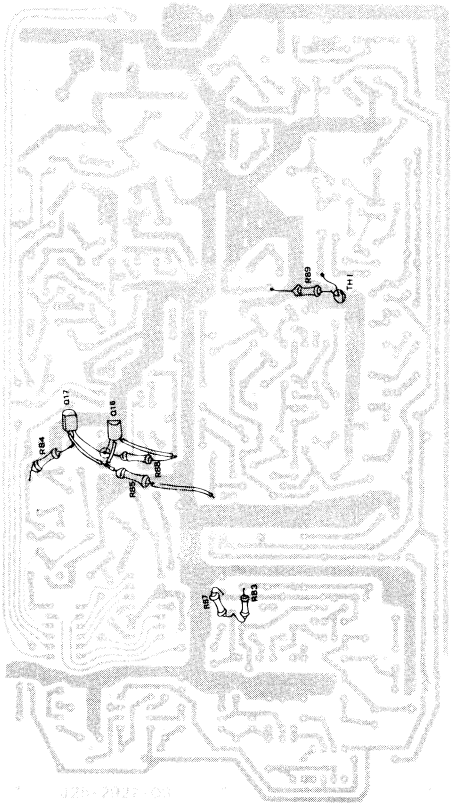

X73-1390-00

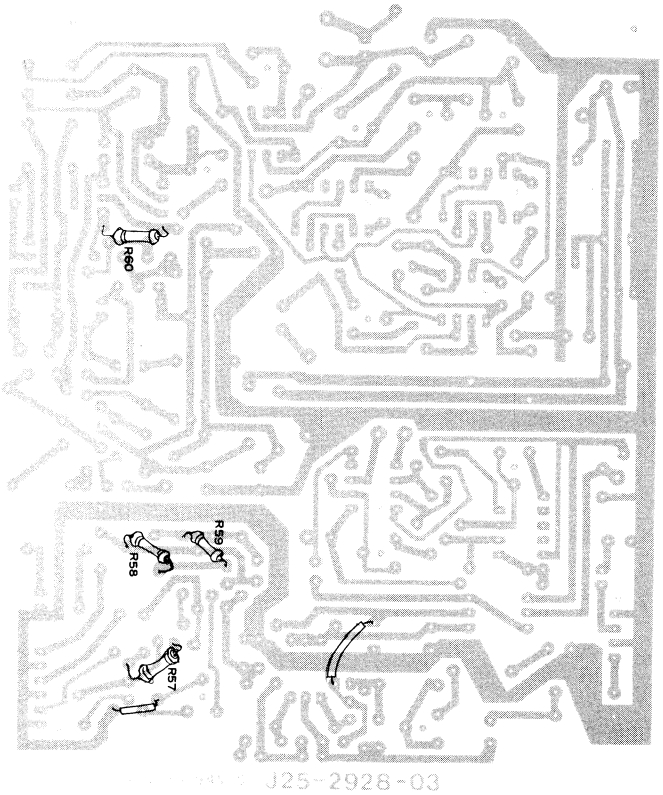

MEMO