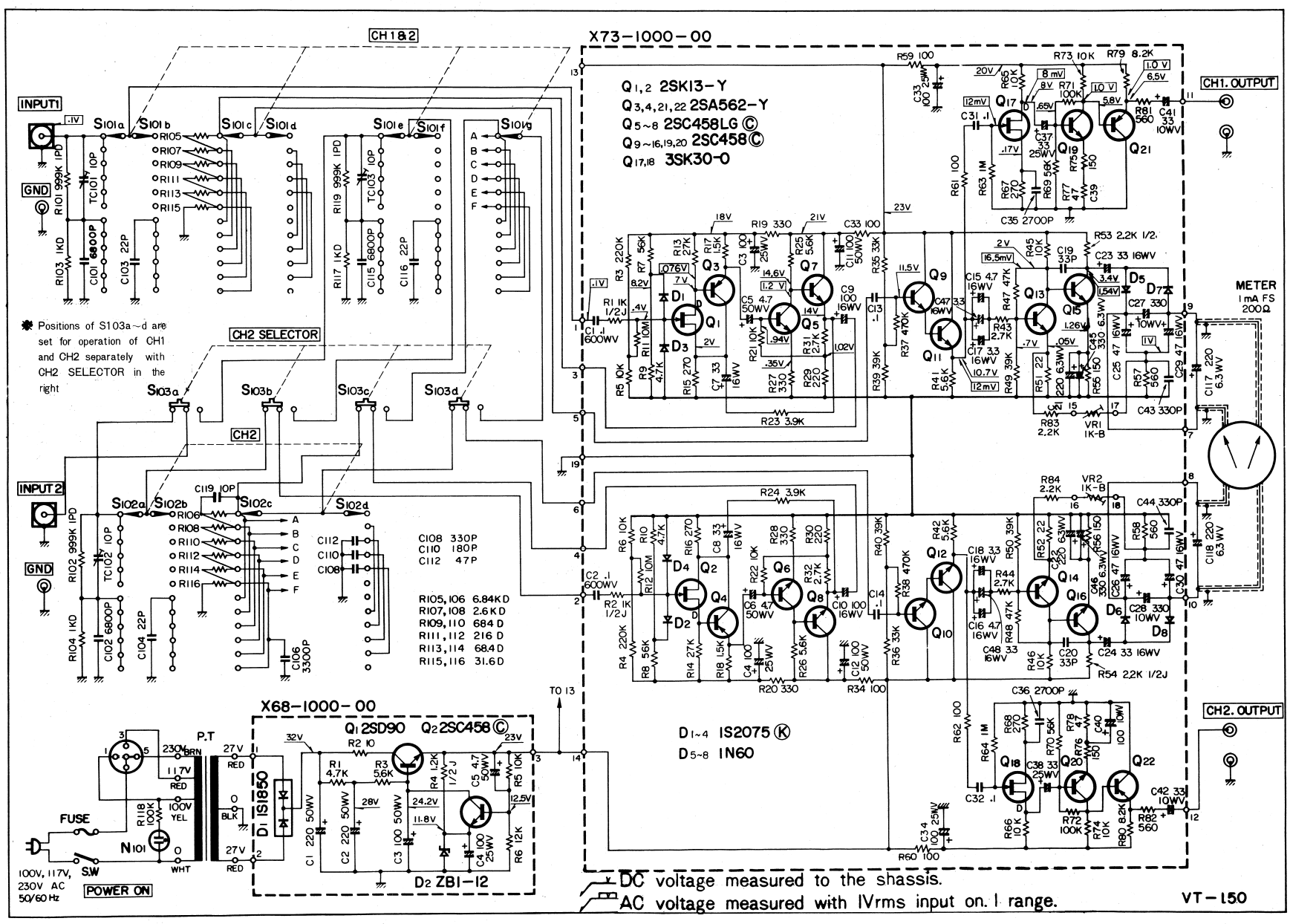

power Connection is for AC230V operation, in this circuit diagram
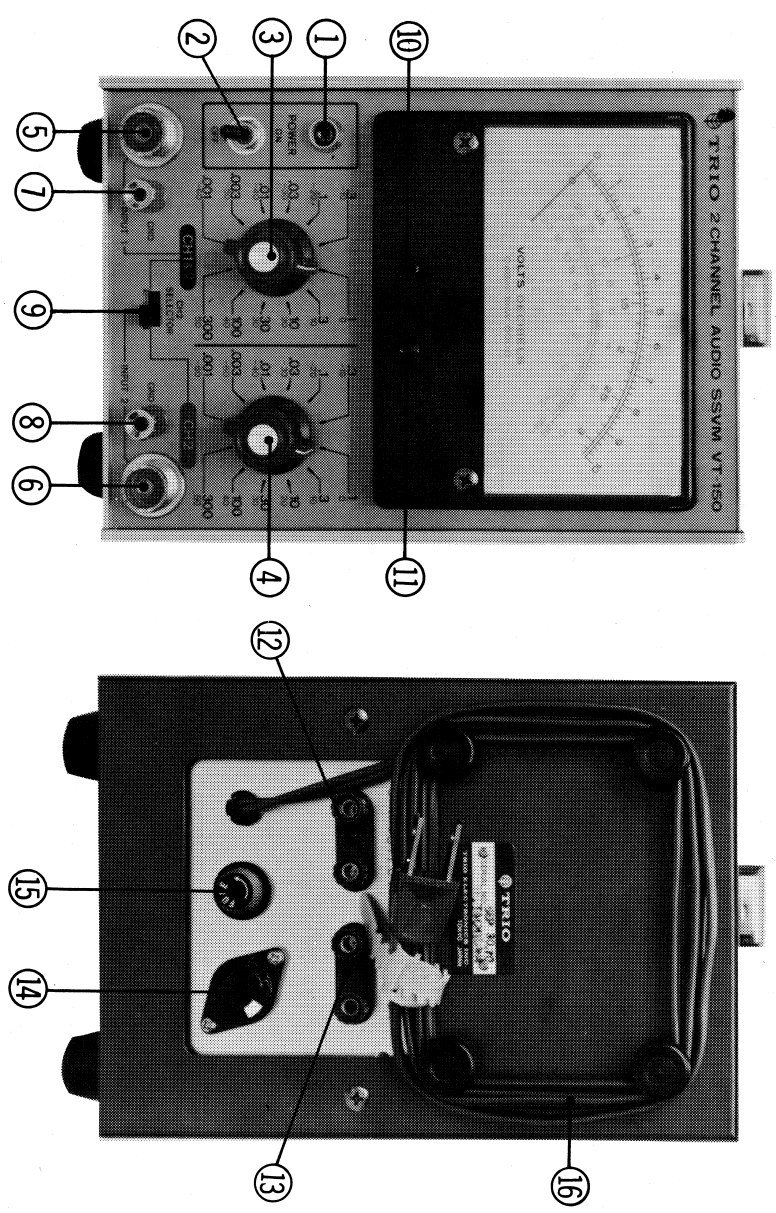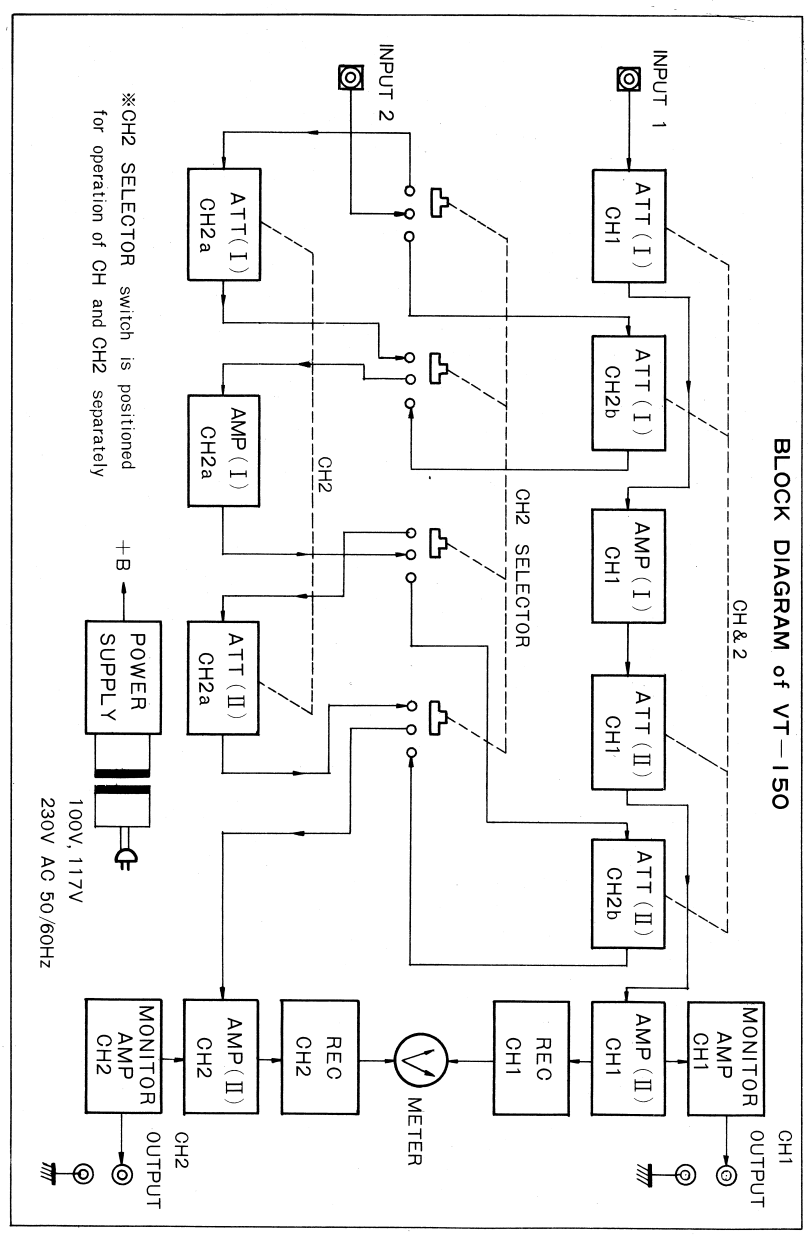
Note: Resistor with no specified value are those of 1/4W and 5%. Also, the circuit elements may be changed without notice owing to a technical innovation.