Regulating Mains Voltage with a Variac

by Dr Hugo Holden

The idea of using a motor to drive a Variac to maintain a constant mains voltage has been around for a while. It's a simple solution to a difficult problem, and for the most part, works very well. This article describes how you can build your own mains regulator.

This device was built to obtain a 115V AC stabilised power source to run a vintage computer. Still, it can easily be adapted to provide a stabilised 230-240V AC supply for running any manner of mains equipment including radios, amplifiers etc.

Using a motor to drive a Variac for mains regulation is the easiest way to get a constant AC voltage for voltage-sensitive equipment. Of course, it can't respond on a cycle-by-cycle basis, but it does an excellent job of accounting for the longer-term changes.

Mains voltage shifts are widespread these days due to solar and wind power, which can significantly increase the supply voltage at times of high insolation/wind. Of course, it will then drop back again later, so you can't merely account for it with a step-down transformer. Demand changes during the day can also cause fairly significant shifts, as can large loads (eg, in nearby factories) switching on and off

Most modern devices will operate just fine from below 220V AC right up to the typical maximum of 253V AC (230V AC + 10%), although some areas can see voltages higher than this from time to time. It's especially bad in rural areas where you might be at the end of a long supply line, and there might also be renewable energy generators in the area.

But what if you have sensitive equipment? These very high voltages can damage some equipment, while devices which are not damaged by it can still malfunction. So it's desirable to have a way to stabilise the voltage being fed to them.

In the case of my retro SOL-20 computer, as was common with many S-100 bus computers of the 1970s, it has a transformer-based (analog) power supply. After the transformer is a full-wave rectifier and very high-value filter capacitors. It uses linear regulators to produce its 5V rail, so the higher the mains input voltage, the more those regulators dissipate heat.

By regulating its supply voltage to the lowest value that gives enough headroom for the linear regulators to operate, I reduce its internal dissipation and lengthen its lifespan. My design therefore has an adjustable output voltage, which I set to around 94V AC. That's sufficient to keep the computer stable and its 5V rail nicely regulated, while minimising dissipation.

The voltage set knob on the front panel has a mechanical locking ring, so it cannot get accidentally bumped out of position. I harvested that from a defunct laboratory amplifier.

By the way, it would be possible to do something similar to using a Variac by feeding the output of a beefy switchmode AC-to-DC converter into the input of a pure sinewave inverter. The inverter's output voltage would thus be decoupled from variations in the mains voltages, which presumably would not bother the step-down circuitry.

However, this results in a significantly noisier output with a lot more EMI due to having two high-current switching converters in the device. I also think that this configuration is more prone to failures, some of which could damage connected equipment. That approach could also be quite expensive and probably inefficient. So I went ahead with the Variac-based design.

Despite the 'vintage' nature of a Variac, the sinewave amplitude (output voltage) is very well and smoothly controlled, and efficiently too.

Importantly, it's also quite easy for me to set up the Variac-based design to physically limit the maximum possible output voltage to a safe level. This way, even if there is a complete electronic failure, it can't damage the load device(s).

Design concept

The basic operation of the Mains Voltage Regulator is shown in the block diagram, Fig.1. The incoming mains voltage is applied to the input side of the Variac via a fuse, and the output of the Variac drives the load. It also powers a secondary supply to run the control circuitry. Part of this supply generates a DC voltage related to the AC voltage from the Variac output.

That is then fed to the non-inverting input of an op amp based differential

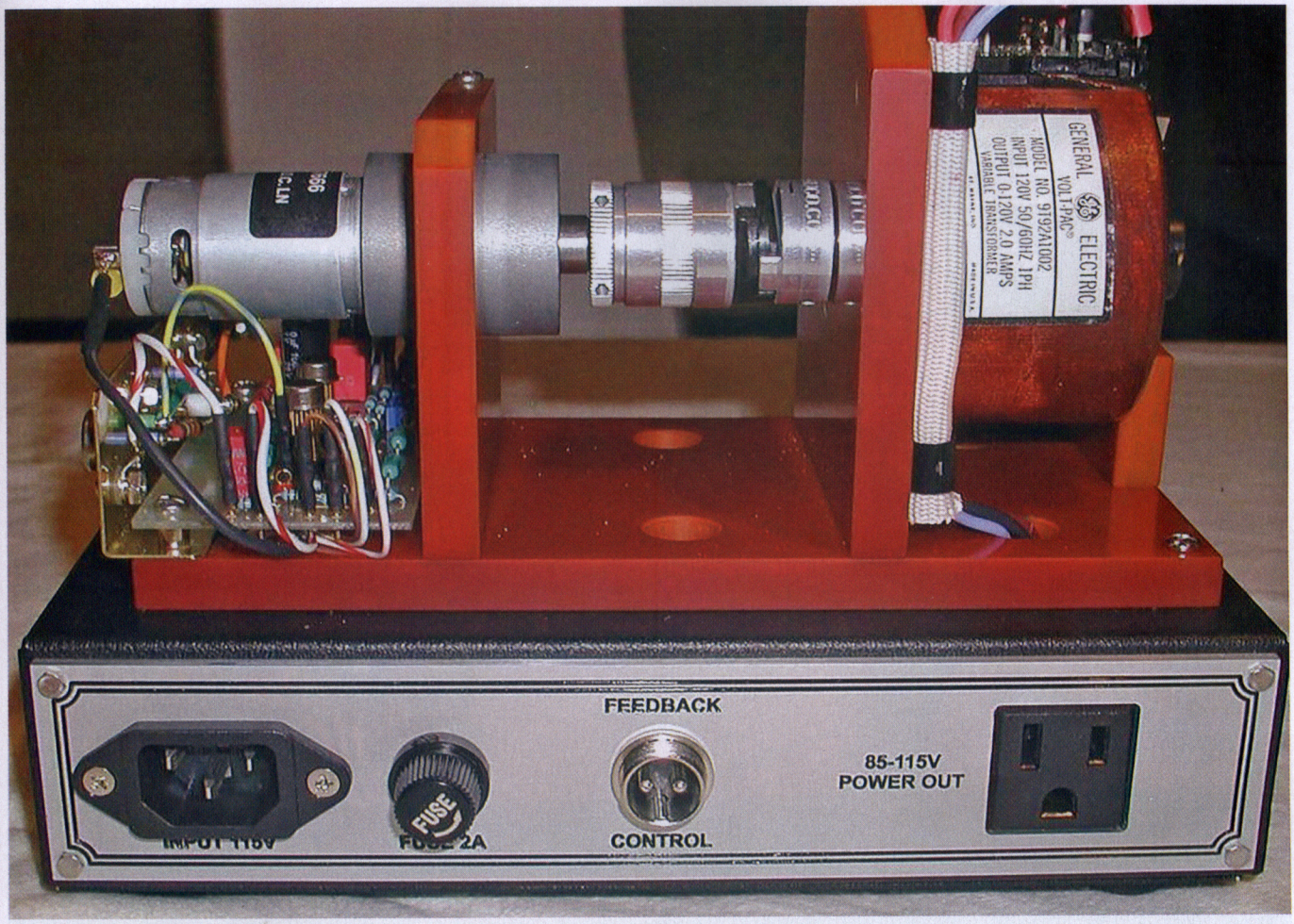

amplifier, with the inverting input connected to a fixed +8V reference. The output of this amplifier indicates how much the Variac output voltage deviates from the reference point. That voltage is fed to the inverting input of the second op amp.

Its non-inverting input voltage is controlled by the output voltage set pot on the front panel. So its output will be negative when the output voltage is higher than the setpoint, and positive when the output voltage is lower. This then controls the motor driver, which drives the Variac in the correct direction to maintain the desired voltage.

Importantly, a dead band is implemented in this drive to prevent the motor from hunting due to minimal mains voltage variations.

We don't want it doing anything

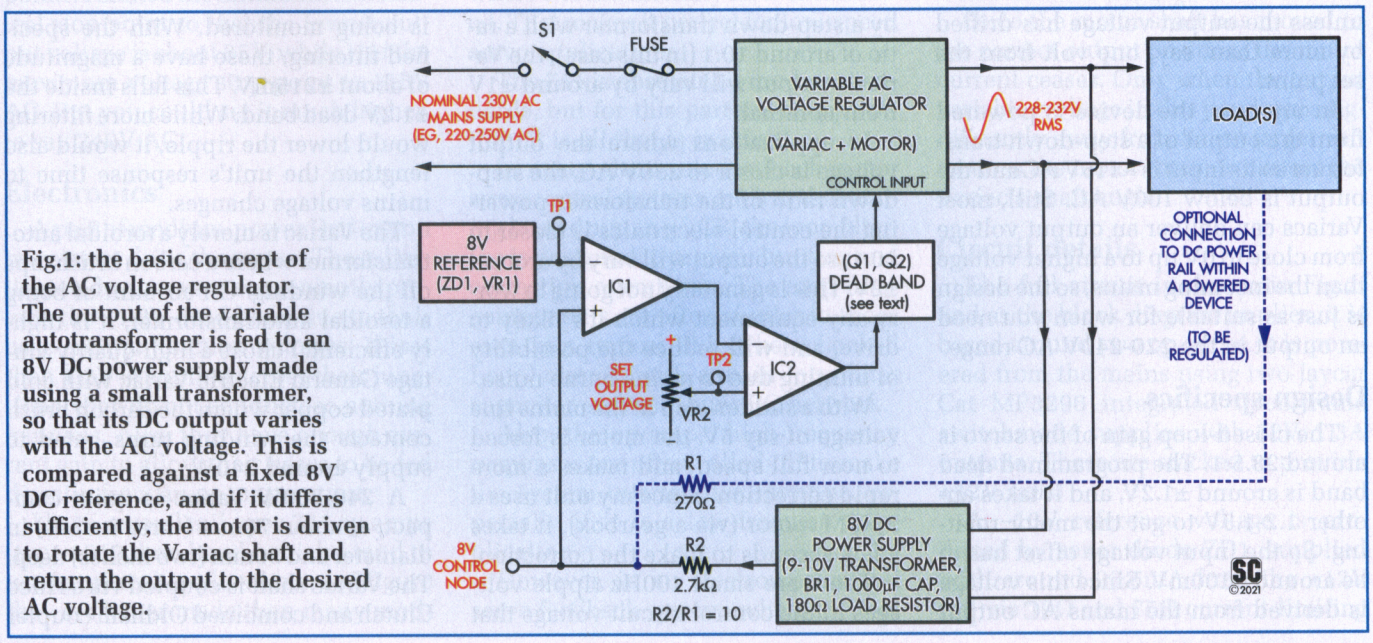

Fig.1: the basic concept of the AC voltage regulator. The output of the variable autotransformer is fed to an 8V DC power supply made using a small transformer, so that its DC output varies with the AC voltage. This is compared against a fixed 8V DC reference, and if it differs sufficiently, the motor is driven to rotate the Variac shaft and return the output to the desired AC voltage.

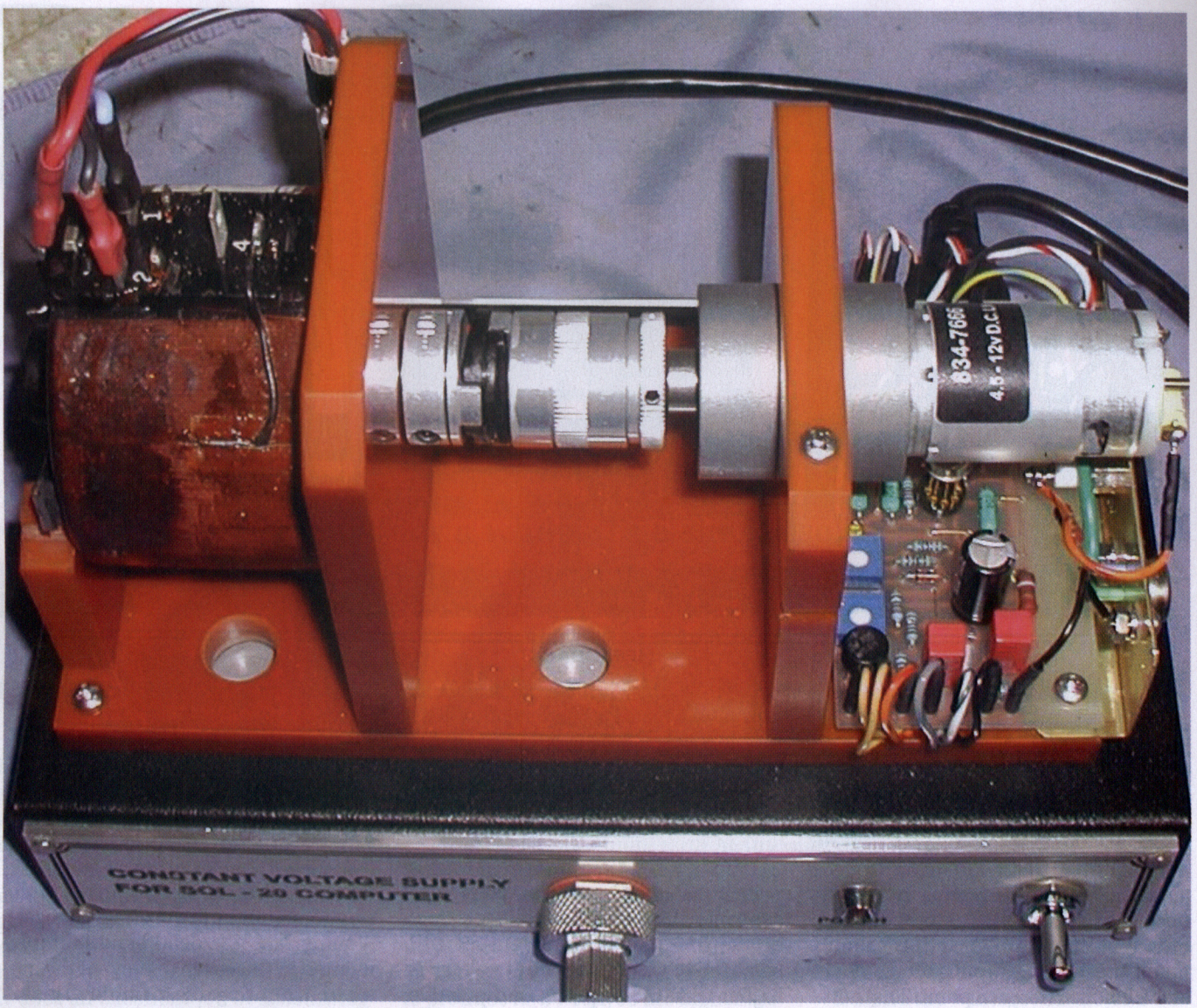

With the Earthed cage removed, this photo clearly shows the clutch which prevents damage if the motor tries to drive the Variac beyond its end stops.

unless the output voltage has drifted by more than, say, one volt from the set point.

In my case, the device is powered from the output of a step-down transformer so its input is ~115V AC and the output is below 100V AC. Still, most Variacs can deliver an output voltage from close to 0V up to a higher voltage than the incoming mains, so the design is just as suitable for when you need an output in the 220-240V AC range.

Design specifics

The closed-loop gain of the servo is around 23.5:1. The programmed dead band is around ±1.2V, and it takes another 1.2-1.3V to get the motor rotating. So the input voltage offset has to be around ±100mV. Since this voltage is derived from the mains AC output by a step-down transformer with a ratio of around 10:1 (in this case), the Variac's output will vary by around ±1V from nominal.

In applications where the output voltage is closer to 230V AC, the step-down ratio of the transformer powering the control electronics is closer to 20:1, so the output will vary by around ±2V. This is generally not going to worry any equipment which it's likely to drive, and will reduce the possibility of hunting due to mains-borne noise.

With a sudden step in the mains line voltage of say 5V, the motor is forced to near full speed, and makes a more rapid correction. Since my unit uses a 2 RPM motor (via a gearbox), it takes a few seconds to make the correction.

There are small 100Hz ripple voltages in the control circuit voltage that is being monitored. With the specified filtering, these have a magnitude of about ±215mV. This falls inside the ±1.2V dead band. While more filtering would lower the ripple, it would also lengthen the unit's response time to mains voltage changes.

The Variac is merely a toroidal autotransformer where a carbon brush taps off the winding. On account of being a toroidal autotransformer, it is highly efficient. I chose a high-quality vintage General Electric Variac with gold plated copper where the carbon brush contacts the winding turns, rated to supply around 240W.

A 240-300W Variac is quite compact, at about 76mm (three inches) in diameter and 50mm (two inches) deep. The Variac shaft is coupled via a Huco Clutch and combined Oldham coupler

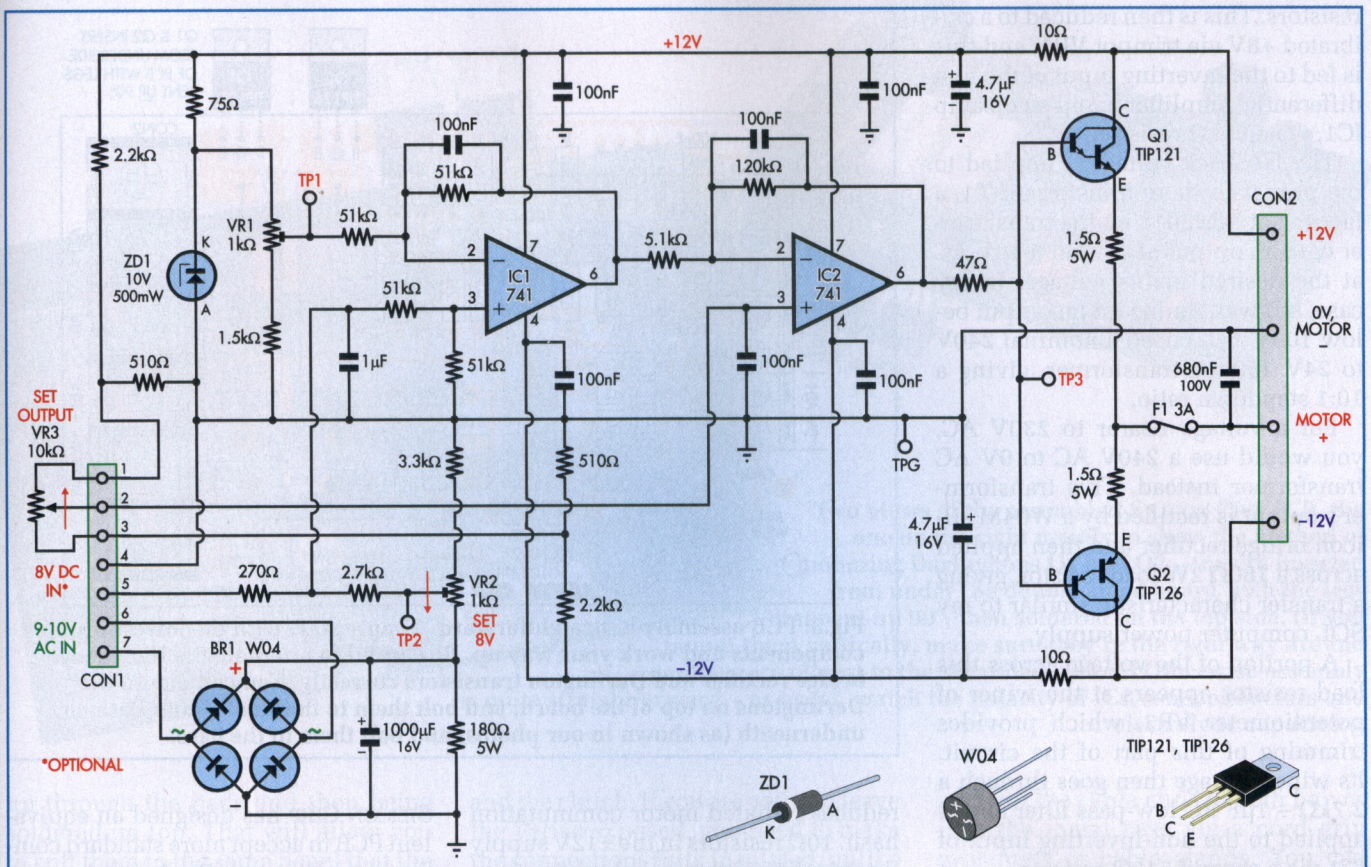

VOLTAGE STABILISER SERVO CONTROLLER

Fig.2: the control circuit is relatively simple, being based on just two op amps, a zener diode as a voltage reference and a pair of Darlington transistors to drive the motor in either direction. The Darlington base-emitter voltages of around 1.4V each result in a dead band which prevents the motor from hunting due to small mains variations.

to a 2 RPM output 12V DC motor.

The purpose of the clutch is to slip when the Variac reaches its maximum or minimum voltage mechanical stop points. I crafted the minimum mechanical stop point so that the lowest output voltage is about 85V, while I set the maximum voltage stop point to 115V AC. But you could set it much higher, to say 240V AC.

Electronics

A pair of medium-power Darlington transistors drive the motor. These Darlington devices very conveniently provide the ±1.2V dead-band due to their base-emitter junction voltages. If less than 1.2V is applied across their junctions, they do not conduct, so nothing happens. Also, they have enough current gain to allow their bases to be fed directly from an op amp output.

I have several mil-spec 741 op amps (type 10101) on hand, which I tend to use in critical applications, as I figure they are better made than many modern 'jelly bean' op amps in plastic cases. One great thing about the 741 is that it is utterly deaf at radio frequencies, and not much use above 20kHz either, where it is intrinsically slew-rate limited. That makes it perfect for low-speed servo applications.

The 741 is obsolete by modern standards, but for this particular application, it is all that is required.

In many electronic feedback motor servo control systems, such as the rotating head drum in a VCR, the loop filtering is designed to prevent hunting and correction overshoots. The loop filter components are often similar to those seen in a typical PLL (Phase Locked Loop) circuit, with a main loop filter capacitor and anti-hunt RC network.

Also, the op amps' high-frequency responses are often rolled off to make the system interference immune, especially if it is a low-frequency application.

However, in an electromechanical servo feedback system, where it is not a continuously rotating machine, one does not want constant activity of the motor. Hence the dead band, which solves the hunting issue; the anti-hunt RC network is not required.

Once the motor shaft has moved to the correct output position, the motor current ceases. Only when the output variable (voltage in this case) steps significantly away from its set target value does the motor rotate to correct the Variac's shaft angle.

Circuit details

The full circuit is shown in Fig.2, and as the block diagram implies, it is based around two op amps. It is powered from the mains using two Jaycar Cat MP3296 integrated open-frame switchmode supplies with 12V, 1.3A outputs. These are stacked to provide ±12V rails.

A ~10V reference voltage is produced by zener diode ZD1, supplied with around 23.5mA from the +12V rail via 10Ω and 75Ω current-limiting

resistors. This is then reduced to a calibrated +8V via trimpot VR1, and this is fed to the inverting input of the first differential amplifier based on op amp IC1, via a 51kΩ resistor.

The feedback voltage is applied to the primary side of transformer T1, a Jaycar Cat MM2018 mains transformer with an output of around 9-10V AC at the desired mains voltage. In my case, as I was aiming for an output below 100V AC, I used a nominal 240V to 24V 150mA transformer, giving a 10:1 stepdown ratio.

For a voltage nearer to 230V AC, you would use a 240V AC to 9V AC transformer instead. This transformer's output is rectified by a W04M silicon bridge rectifier and then applied across a 180Ω 2W load resistor, giving a transfer characteristic similar to my SOL computer power supply.

A portion of the voltage across this load resistor appears at the wiper of potentiometer VR2, which provides trimming of this part of the circuit. Its wiper voltage then goes through a 2.7kΩ ÷ 1µF RC low-pass filter and is applied to the non-inverting input of IC1 via a second 51kΩ resistor.

As all four divider/feedback resistors in the differential amplifier around IC1 are 51kΩ, it has unity gain. So the voltage at its output pin 6 is the feedback voltage minus the 8V reference. Thus, it will be above 0V if the feedback voltage is above 8V or below 0V if it is below 8V.

This difference voltage then goes to the inverting input of op amp IC2 via a 5.1kΩ resistor. The 120kΩ feedback resistor sets the gain of this stage to 120kΩ ÷ 5.1kΩ = 23.5 times. The non-inverting input is held at a constant voltage between +2V and -2V as set by output adjustment potentiometer VR3.

Both ends of VR3 are connected to the junction of 2.2kΩ/510Ω resistive dividers across the +12V and -12V supply rails, providing the correct adjustment range. This allows a maximum adjustment of around 25% of the nominal mains voltage, which is plenty.

A 100nF capacitor lowers the frequency response enough to make it unresponsive to noise.

Output pin 6 of IC2 then drives a pair of Darlington emitter-followers that drive the motor from the ±12V rails, with 1.5Ω 5W emitter resistors limiting the peak motor current to around 5A.

A 680nF capacitor across the motor reduces radiated motor commutation hash. 10Ω resistors in the ±12V supply lines isolate motor supply noise from the rest of the circuit.

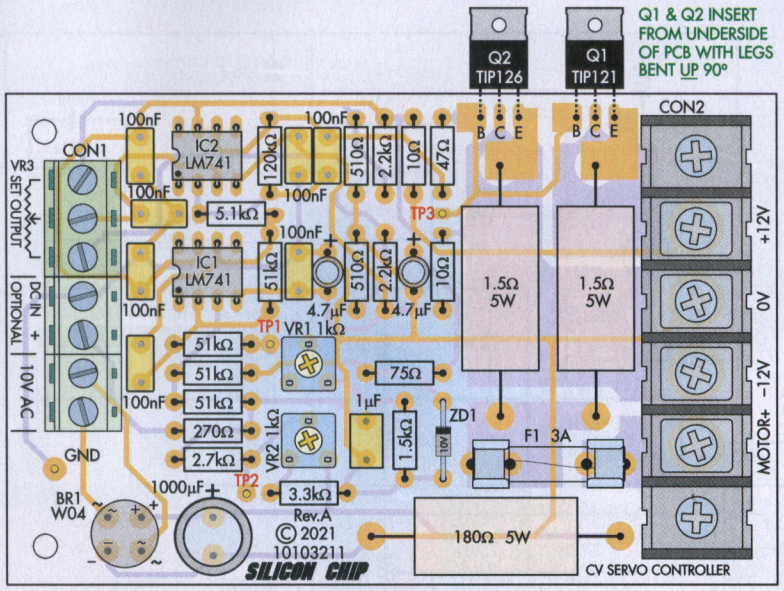

Fig.3: PCB assembly is straightforward. Simply start with the lowest-profile components and work your way up. Be careful to orientate the ICs, diode, bridge rectifier and Darlington transistors correctly. You can mount the Darlingtons on top of the board, and bolt them to the side of your case, or underneath (as shown in our photos) and bolt them to the base.

DC load sampling

You might be wondering about the purpose of the 8V DC input at CON1. This is so that if you have a DC rail in one of the devices you're powering that varies based on its mains input voltage, you can regulate that DC rail directly, rather than relying on the onboard transformer, rectifier and load resistor.

In this case, you connect your device's DC supply across pins 4 & 5 of CON1, and this dominates the other feedback mechanism, providing (theoretically) better regulation of your device's internal voltages.

I tested by connecting the voltage rail feeding the input of the 5V regulator on my vintage computer, but found that it didn't improve regulation very much. So in the end, I stuck with the internal feedback, but I left this option in the design in case it came in handy in other use cases.

PCB assembly

I etched a PCB and assembled it using a selection of high-quality components I had on hand, as shown in the photos above. But as you are unlikely to have these same components (and probably can't easily get them either), Silicon Chip has designed an equivalent PCB to accept more standard components, shown in Fig.3 and the adjacent photos.

Assembly is straightforward. Start by fitting all the resistors where shown in the overlay diagram, followed by the zener diode (correctly orientated) and the IC sockets. If you are not using IC sockets, you can solder the op amps straight to the board, but either way, make sure their pin 1 dots/notches are aligned correctly. Install the bridge rectifier next, with its longer + lead to the pad so marked.

Follow with the trimpots (both 1kΩ and likely coded 103), then the smaller capacitors, then the terminal blocks, with their wire entry holes towards the board edges. Next, mount the sole electrolytic capacitor, ensuring its longer lead goes to the pad marked + on the PCB. With that in place, fit four tapped spacers to the board's underside using short machine screws through the four mounting holes.

That just leaves the two Darlington transistors. These must be isolated from any heatsink using the insulating washers and bushes, as shown in Fig.5.

You can mount them vertically at the edge of the board, so they can be bolted to a vertical heatsink or the side of the metal case. Alternatively, you can bend their leads so that they mount under the board, with the leads going

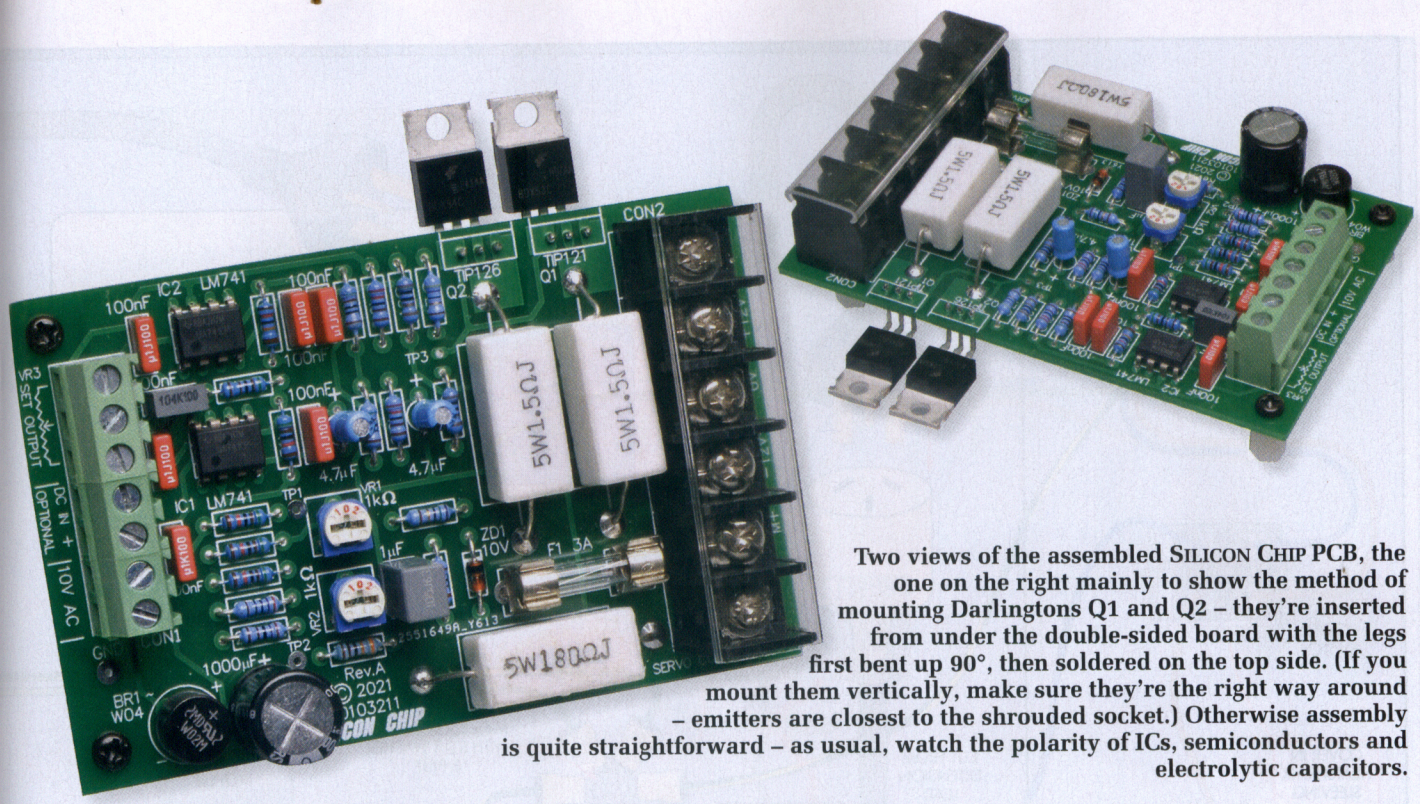

Two views of the assembled Silicon Chip PCB, the one on the right mainly to show the method of mounting Darlingtons Q1 and Q2 – they're inserted from under the double-sided board with the legs first bent up 90°, then soldered on the top side. (If you mount them vertically, make sure they're the right way around – emitters are closest to the shrouded socket.) Otherwise assembly is quite straightforward – as usual, watch the polarity of ICs, semiconductors and electrolytic capacitors.

up through the pads and then being soldered on top. That will allow you to bolt them to the same panel that the board is on.

If you are going to have the Darlingtons underneath like that, make sure they are installed at sufficient distance to rest on top of insulating pads sandwiched between their tabs and the bottom of the case.

Mechanical construction

I built my electronics into a Hammond pre-painted steel chassis with a ventilated top cover, then created an insulated structure on top of the case which holds the Variac, the DC motor and the clutch. If you are going to leave the Variac exposed, you need to make the connections fully insulated, unlike mine, which has exposed spade terminals at dangerous potentials.

I mounted the Variac, clutch and motor on brackets made from 10mm-thick phenolic electrical panel (an excellent insulator). The phenolic insulating material can be tapped, which simplifies construction. You will need to come up with a similar construction to suit your Variac, clutch and motor. It would be possible to use 10mm thick epoxy fibreglass sheet.

The easiest (and probably safest) way to cut an extension cord in half and run the cable ends of both halves into the metal case via a cord grip grommets or cable glands. You can then connect the plug end into the Variac's output and use that to power the internal circuitry, with the socket end being internally wired to the plug to provide an external connection for the load(s).

In my case, the Variac has exposed mains terminals (spade lugs), so I had to enclose that whole section in an Earthed metal mesh box. You could do that too, but if you use the plug and socket approach and keep all the mains wiring inside the control box, it won't be necessary.

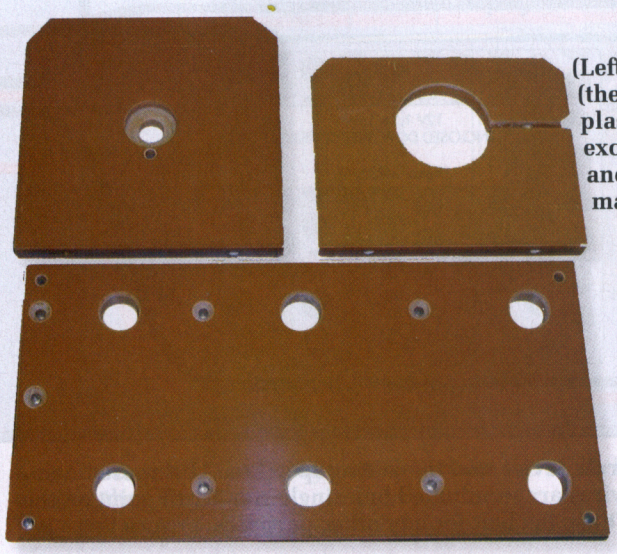

(Left): phenolic (thermosetting plastic) is an excellent insulator and is also easily machined.

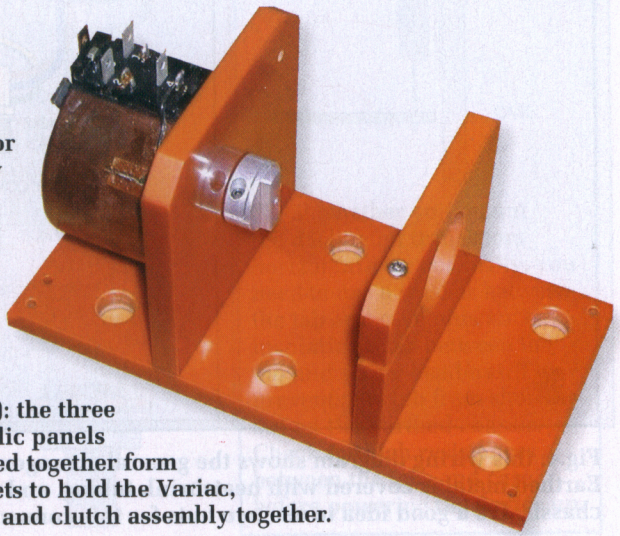

(Right): the three phenolic panels screwed together form brackets to hold the Variac, motor and clutch assembly together.

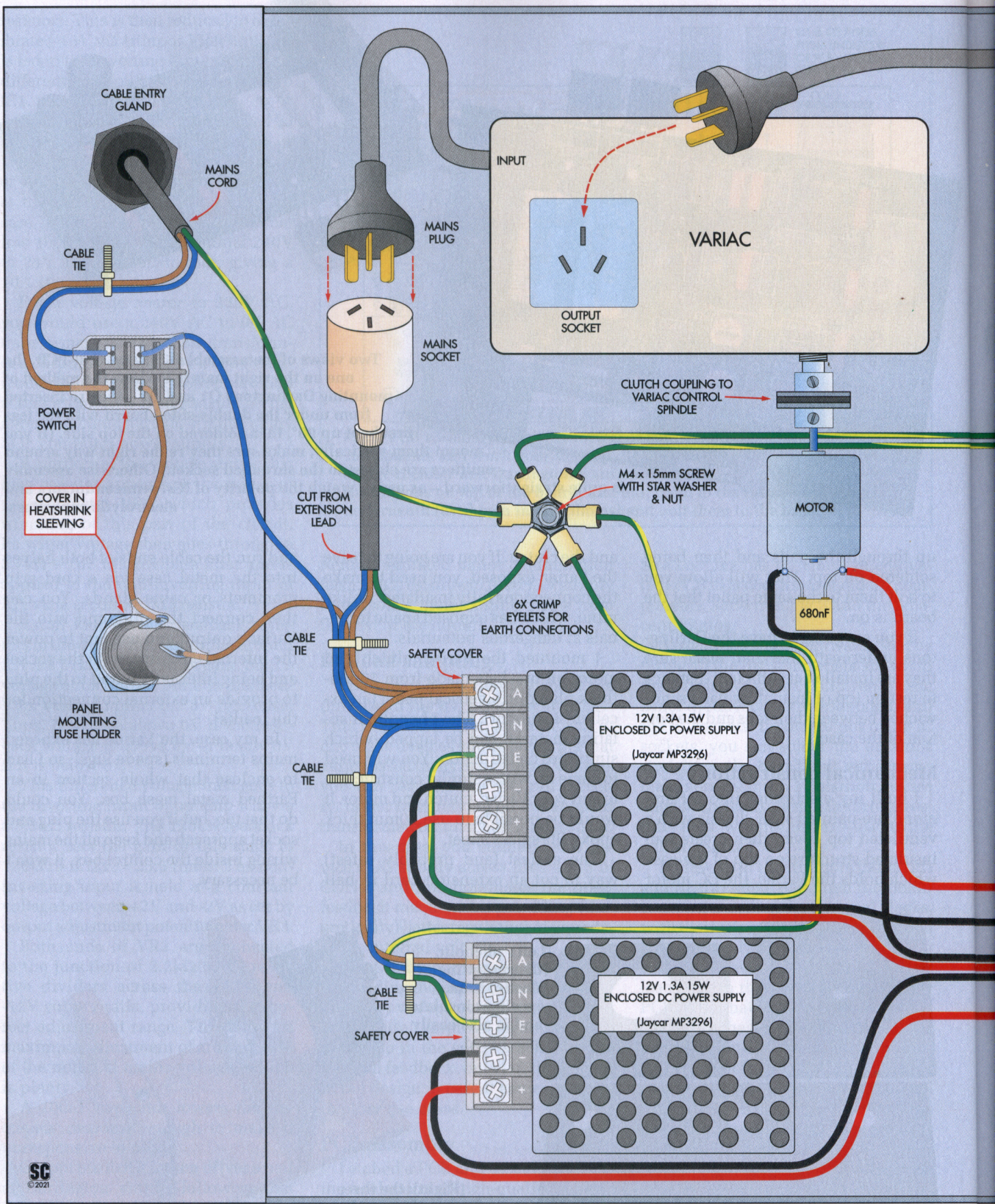

Fig.4: this wiring diagram shows the general arrangement of the overall device and the wiring specifics. All exposed non-Earthed metal is covered with heatshrink tubing, and all the Earth wires are terminated to a single star Earth point on the chassis. It's a good idea to use two nuts for this connection, and don't use the bolt for any other purposes. Ensure there is

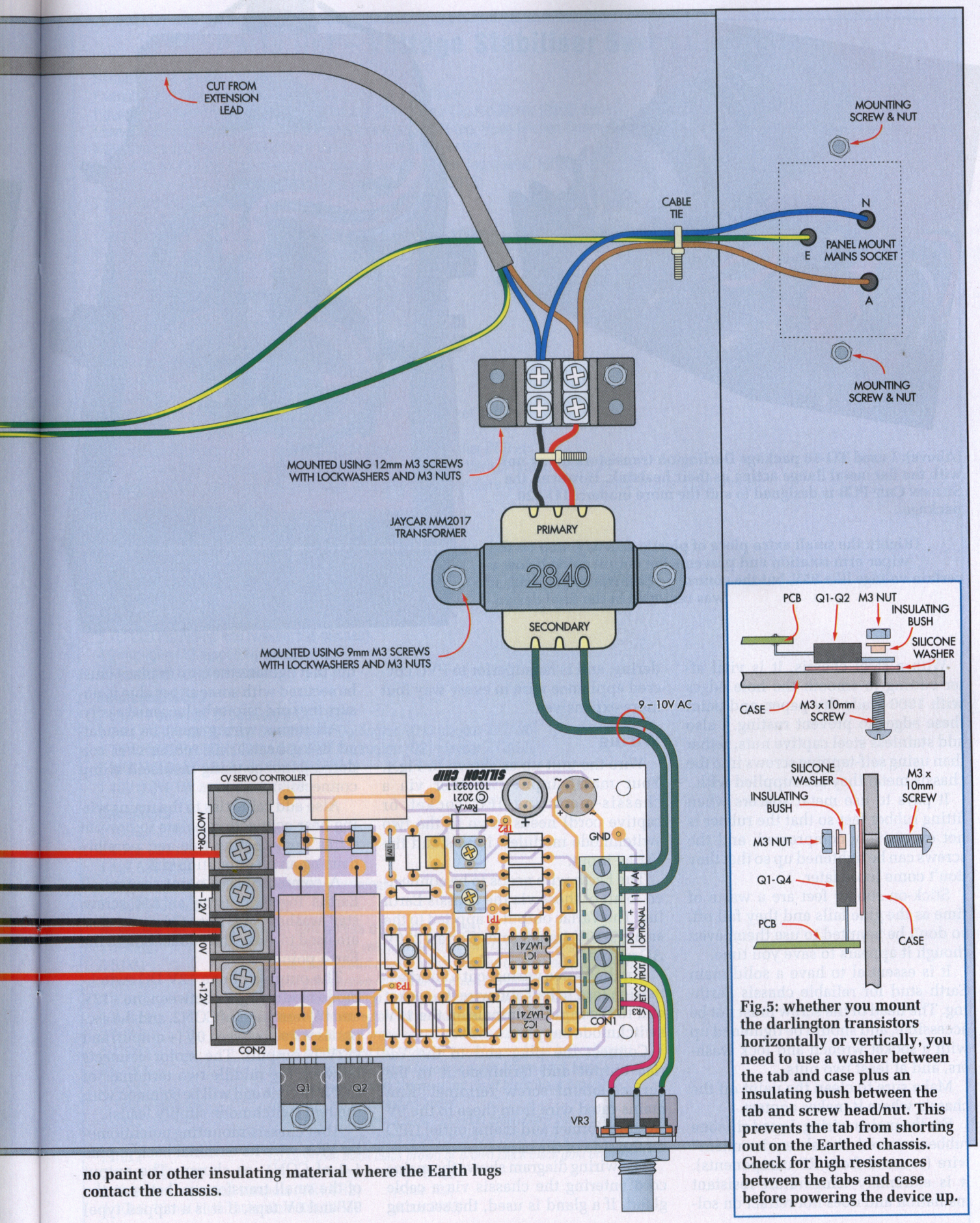

Fig.5: whether you mount the darlington transistors horizontally or vertically, you need to use a washer between the tab and case plus an insulating bush between the tab and screw head/nut. This prevents the tab from shorting out on the Earthed chassis. Check for high resistances between the tabs and case before powering the device up.

no paint or other insulating material where the Earth lugs contact the chassis.

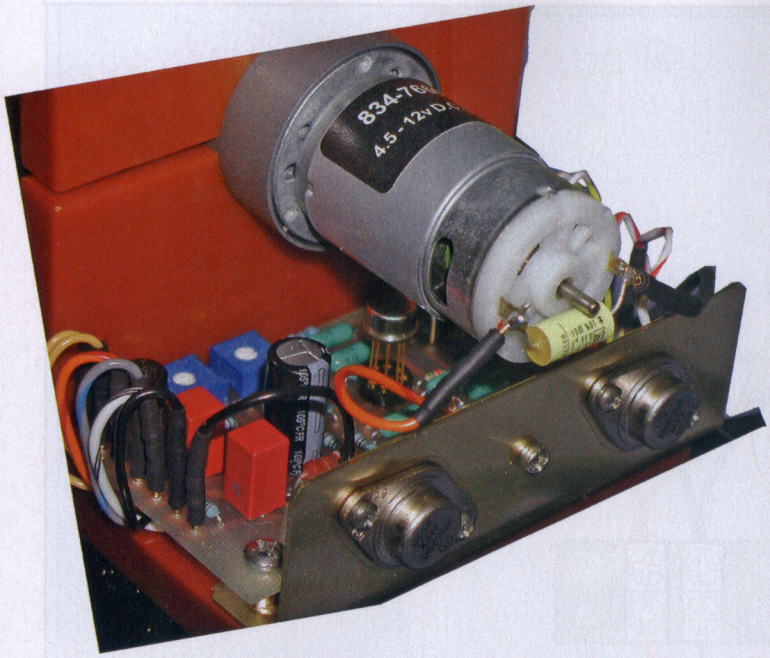

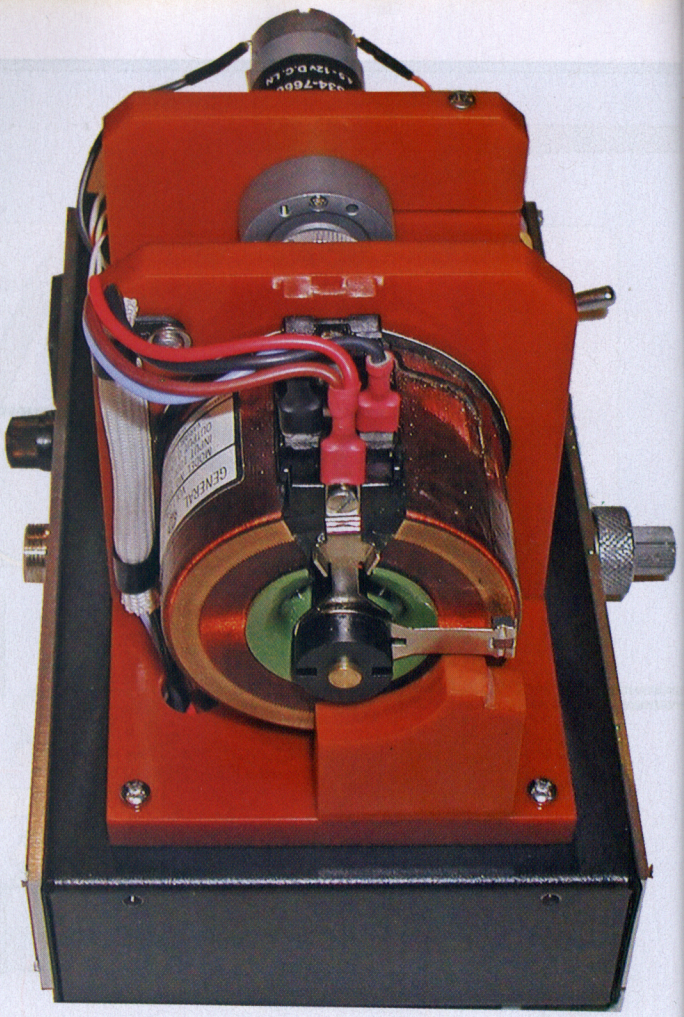

(Above): I used TO-66 package Darlington transistors in my unit with the flat metal flange acting as their heatsink. However, the SILICON CHIP PCB is designed to suit the more modern TO-220 package.

(Right): the small extra piece of plastic acts as a stop on the wiper arm rotation and prevents the output going below a certain voltage like 85V, but the control system worked so well, it was removed in the final design.

With a steel chassis, it is vital after cutting to smooth the hole edges with 1000 grade dry paper, and paint these edges to prevent rusting. I also add stainless steel captive nuts, rather than using self-tapping screws into the chassis metal they are supplied with.

It pays to use metal spacers when fitting rubber feet so that the rubber is not excessively compressed, and the screws can be tightened up so that they don't come loose later.

Stick-on rubber feet are a waste of time as the glue fails and they fall off, so don't be tempted to use them, even though it appears to save you time.

It is essential to have a solid main Earth stud for reliable chassis Earthing. The head of the screw must not be accessible, and should be tightened up with a socket wrench and lock washers, and at least two nuts.

Make sure to clean the paint off the chassis where it makes contact.

For the mains wiring, I used silicone rubber covered "harsh environment" wire (sourced from RS components). It is extremely temperature-resistant insulation and does not retract on soldering, and is far superior to PVC covered appliance wire in every way (but more expensive).

Wiring

Wire the unit up as shown in Fig.4. Your mains input (whether via a chassis-mounting IEC socket or captive cord) needs to go to the two switchmode modules' inputs and the Variac input.

The Earth wire needs to be connected to all of those via the chassis Earth lug. The Variac output is applied to the small 9-10V transformer (for a ~230V AC output).

For the Variac wiring, cut a short extension lead in half and wire the socket end to the input terminals on the 12V switchmode supplies.

Connect the plug end to the Variac output and terminate it to the surface-mount screw terminal. Run mains-rated wire from these to the 9V AC transformer and mains outlet GPO on the side of the case.

The wiring diagram shows the mains cord entering the chassis via a cable gland. If a gland is used, the securing nut that tightens the cord in place must be secured with some super glue to ensure the cord cannot be loosened easily.

All mains wiring must be insulated using heatshrink tubing over soldered joints or using insulated crimp connectors.

Also add cable ties to the mains wiring near connection points to prevent wires from coming free and possibly causing an electrocution risk.

A common Earth point secures all Earths together using an M4 screw, star washer and nut. Crimp eyelets are used to make the connection to the Earth point.

The outputs of one 12V DC switchmode modules goes between the +12V and 0V terminals of CON2, and the second is wired between 0V (+ output) and -12V (- output). The motor connects between the middle two terminals of CON2 (ie, one end will be common with the two switchmode supply leads).

After chassis-mounting potentiometer VR3, wire its terminal back to pins 1-3 of CON1, as shown. The output of the small transformer (between the 9V and 0V taps, if it is a tapped type)

Parts list – Voltage Stabiliser Servo Controller

1 control module (see below)
1 variable autotransformer ("Variac"), to suit your application
1 geared DC motor, approximately 2 RPM (eg 35mm Spur Geared Motor [980D Series]) [RS Components 834-7666]
1 small clutch assembly (to connect motor to Variac shaft) (eg, Huco Friction Clutch, 6mm bore 53Ncm) [RS Components 890-3036]
1 Oldham clutch coupler adaptor for Variac-to-clutch connection
2 230V AC to 12V DC 1.3A open-frame switchmode supplies [eg, Jaycar MP3296]
1 small 230V AC to 9-10V AC transformer [eg, Jaycar MM2017]
1 panel-mount M205 safety fuse holder [Jaycar SZ2028]
1 M205 fast-blow fuse, to suit Variac rating
1 DPST 240V AC Neon illuminated rocker switch [Jaycar SK0995]
1 2-way surface-mount screw terminal strip [Jaycar HM3167]
1 cord grip grommet or cable gland to suit mains lead
1 panel-mount mains socket (GPO)
1 M4 x 15mm screw
1 4mm star washer
1 M4 nut
6 M3 x 15-16mm machine screws
10 flat washers to suit M3 screws
6 M3 hex nuts
1 short extension lead (cut in half to give plug lead and socket lead)
1 mains lead with 3-pin moulded plug
1 metal box large enough to fit switchmode supplies, controller PCB etc
Insulating material (phenolic, MDF etc) to make brackets for Variac, motor, clutch etc
Screws, washers, nuts, crimp eyelet lugs, crimp spade connectors, cord grip grommets, mains-rated wire etc

Control module parts
1 double-sided PCB coded 10103211, 102 x 65mm
1 3-way 5.08mm screw terminal (CON1)
2 2-way 5.08mm screw terminals (CON1)
1 PCB-mounting 4-way terminal barrier with two mounting holes (CON2) [Jaycar HM3162]
1 pair of M205 fuse clips (F1)
1 3A fast-blow fuse (F1)
2 TO-220 insulating kits (washers & bushes)
4 9mm-long M3 tapped Nylon spacers
8 M3 x 5mm machine screws

Semiconductors
2 LM741 op amps or equivalent (IC1,IC2)
1 TIP121/BD649/BDX53C 8A 80V NPN Darlington (Q1) [Jaycar ZT2198]
1 TIP126/BD650/BDX54C 8A 80V PNP Darlington (Q2) [Jaycar ZT2199]
1 W02M/W04M 1.5A bridge rectifier (BR1)
1 10V 0.6W/1W zener diode (ZD1)

Capacitors
1 1000µF 25V radial electrolytic
2 4.7µF 50V radial electrolytic
1 1µF 63V MKT
1 680nF 63V MKT (mounted on motor terminals)
7 100nF 63V MKT

Resistors (all 1/4W 1% metal film unless otherwise stated)

1 120kΩ	*(Code brown red yellow brown or brown red black orange brown)*
4 51kΩ	*(Code green brown orange brown or green brown black red brown)*
1 5.1kΩ	*(Code green brown red brown or green brown black brown brown)*
1 3.3kΩ	*(Code orange orange red brown or orange orange black brown brown)*
1 2.7kΩ	*(Code red violet red brown or red violet black brown brown)*
2 2.2kΩ	*(Code red red red brown or red red black brown brown)*
1 1.5kΩ	*(Code brown green red brown or brown green black brown brown)*
2 510Ω	*(Code green brown brown brown or green brown black black brown)*
1 270Ω	*(Code red violet brown brown or red violet black black brown)*
1 180Ω 10% 5W	*(No code – value printed on body)*
1 75Ω	*(Code violet green black brown or violet green black black brown)*
1 47Ω	*(Code yellow violet black brown or yellow violet black gold brown)*
2 10Ω	*(Code brown black black brown or brown black black gold brown)*
2 1.5Ω 10% 5W	*(No code – value printed on body)*
2 1kΩ mini horizontal trimpots (VR1,VR2)	*(Code 102)*
1 10kΩ 16mm linear potentiometer (VR3)	*(Code B103)*



Holes drilled through the phenolic base and lower case lid allow the wiring to pass between the two plus provide some airflow to the box below.



The finished unit; the holes in the upper mesh section allow cooling air to circulate. The unit is very efficient, but still dissipates a few watts at full load.

connects to pins 6 & 7 of CON1, either way around.

Setup

There are three adjustments to be made: adjusting VR1 to get very close to 8V between TP1 and TPG, adjusting VR2 to get 8V between TP2 and TPG, and setting VR3 to get the desired output voltage.

Leave fuse F1 off the board initially, so the motor will not receive power.

The safest way to adjust VR1 is by using a 12V bench supply or small battery to power the circuit, with no mains connection at all. Simply connect this between the +12V and 0V terminals and then adjust VR1 while monitoring TP1.

If you don't have a suitable supply, you can use the 12V switchmode module(s) you will use to power the final device. In this case, make sure that all the mains wiring is fully insulated before you power it up and connect your DMM and screwdriver to make the adjustments.

To adjust VR2, you will need to apply mains power, so double-check your insulation and use a plastic adjustment tool. Be careful when probing TP2 and TPG to stay away from all mains connections. Once again, turn the pot until you get a reading very close to 8V.

You can then fit the fuse, close the whole thing up, power it up and monitor the Variac output voltage (using a mains-rated DMM) while adjusting VR3 to get exactly 230V AC (or whatever your target voltage is).

Make sure there is no load connected until you are sure that the unit is working correctly and the output voltage is set correctly, as some Variacs can produce high enough maximum voltages to damage sensitive equipment.

If the motor runs continually and the Variac is stuck at one of its end stops, you might have to swap the motor wires over to get negative feedback instead of positive feedback.

Note that you could add mechanical stops to the Variac to set a hard upper and lower limit on its output voltage with a nominal mains input. If you think about what will happen in a brownout, that is a very good idea.

If the mains voltage is unusually low, the controller board will wind the Variac right up to maximum. When the mains voltage returns to normal, that could lead to a very high output voltage for a few seconds until it can return close to the 1:1 position.

Another way to protect against that happening would be to combine this unit with a Brownout Protector, such as the one we published in the July 2016 issue (siliconchip.com.au/Article/10000). SC