SONY®

DATA PROJECTOR

VPL-PX35

DATA PROJECTOR

VPL-PX40

PROJECTION LENS (AVAILABLE SEPARATELY)
VPLL-FM22

PROJECTION LENS (AVAILABLE SEPARATELY)
VPLL-ZM102

REMOTE COMMANDER
RM-PJM16

SERVICE MANUAL
1st Edition (Revised 1)

⚠警告

このマニュアルは，サービス専用です。
お客様が，このマニュアルに記載された設置や保守，点検，修理などを行うと感電や火災，人身事故につながることがあります。
危険をさけるため，サービストレーニングを受けた技術者のみご使用ください。

⚠WARNING

This manual is intended for qualified service personnel only.
To reduce the risk of electric shock, fire or injury, do not perform any servicing other than that contained in the operating instructions unless you are qualified to do so. Refer all servicing to qualified service personnel.

⚠WARNUNG

Die Anleitung ist nur für qualifiziertes Fachpersonal bestimmt.
Alle Wartungsarbeiten dürfen nur von qualifiziertem Fachpersonal ausgeführt werden. Um die Gefahr eines elektrischen Schlages, Feuergefahr und Verletzungen zu vermeiden, sind bei Wartungsarbeiten strikt die Angaben in der Anleitung zu befolgen. Andere als die angegeben Wartungsarbeiten dürfen nur von Personen ausgeführt werden, die eine spezielle Befähigung dazu besitzen.

⚠ AVERTISSEMENT

Ce manual est destiné uniquement aux personnes compétentes en charge de l’entretien. Afin de réduire les risques de décharge électrique, d’incendie ou de blessure n’effectuer que les réparations indiquées dans le mode d’emploi à moins d’être qualifié pour en effectuer d’autres. Pour toute réparation faire appel à une personne compétente uniquement.

WARNING!!

AN INSULATED TRANSFORMER SHOULD BE USED DURING ANY SERVICE TO AVOID POSSIBLE SHOCK HAZARD, BECAUSE OF LIVE CHASSIS.
THE CHASSIS OF THIS RECEIVER IS DIRECTLY CONNECTED TO THE AC POWER LINE.

SAFETY-RELATED COMPONENT WARNING !!

COMPONENTS IDENTIFIED BY A ⚠ MARK ON THE SCHEMATIC DIAGRAMS, EXPLODED VIEWS AND IN THE PARTS LIST ARE CRITICAL TO SAFE OPERATION. REPLACE THESE COMPONENTS WITH SONY PARTS WHOSE PART NUMBERS APPEAR AS SHOWN IN THIS MANUAL OR IN SUPPLEMENTS PUBLISHED BY SONY.

ATTENTION!!

AFIN D’ÉVITER TOUT RISQUE D’ÉLECTROCUTION PROVENANT D’UN CHÂSSIS SOUS TENSION, UN TRANSFORMATEUR D’ISOLEMENT DOIT ETRE UTILISÉ LORS DE TOUT DÉPANNAGE.
LE CHÂSSIS DE CE RÉCEPTEUR EST DIRECTEMENT RACCORDÉ Á L’ALIMENTATION SECTEUR.

ATTENTION AUX COMPOSANTS RELATIFS Á LA SÉCURITÉ!!

LES COMPOSANTS IDENTIFIÉS PAR UNE MAPQUE ⚠ SUR LES SCHÉMAS DE PRINCIPE, LES VUES EXPLOSÉES ET LES LISTES DE PIECES SONT D’UNE IMPORTANCE CRITIQUE POUR LA SÉCURITÉ DU FONCTIONNEMENT. NE LES REMPLACER QUE PAR DES COMPOSANTS SONY DONT LE NUMÉRO DE PIÈCE EST INDIQUÉ DANS LE PRÉSENT MANUEL OU DANS DES SUPPLÉMENTS PUBLIÉS PAR SONY.

Table of Contents

1. Service Information

1-1. Appearance Figure 1-1
1-2. Board Locations 1-1
1-3. Disassembly 1-2
1-3-1. Top Cover Assy and Hood Assy Removal 1-2
1-3-2. Projection Lens Removal 1-3
1-3-3. C Board Removal 1-3
1-3-4. NR Board Removal 1-4
1-3-5. Side Panel Block Assy and Q Board Removal 1-5
1-3-6. Bracket 92 and DC Fan 1 Removal 1-6
1-3-7. GA Board, GB Board and Bracket (G) Removal 1-6
1-3-8. OPT UNIT Assy and Lamp Box Removal 1-7
1-3-9. Prism Block Assy Removal 1-7
1-3-10. Bracket (BS), DC Fan 2 and Fan 1 Removal 1-8
1-3-11. Lamp Power Supply Block and V Board Removal 1-9
1-3-12. Fan 2 and U Board Removal 1-9
1-3-13. F Board Removal 1-10
1-3-14. DC Fan 3 Removal 1-10
1-4. Extension Boards and Extension Cables 1-11
1-4-1. Connection 1-12
1-5. Warning on Power Connection 1-12

2. Electrical Adjustments

2-1. Preparation 2-1
2-1-1. Required Equipment 2-1
2-1-2. How to Enter the Factory Mode 2-1
2-2. V COM Adjustment 2-1
2-3. Initial Values of Adjustment Items 2-2
2-4. Service Know-How 2-9
2-4-1. When the Prism Block Is Replaced 2-9
2-4-2. When the C Board Is Replaced 2-9
2-5. White Balance Adjustment 2-9
2-5-1. HIGH Mode of INPUT-D 2-9
2-5-2. LOW Mode of INPUT-D 2-10
2-5-3. HIGH Mode of VIDEO 2-10
2-5-4. LOW Mode of VIDEO 2-10
2-6. Memory Structure 2-11

3. Semiconductors 3-1

4. Spare Parts

4-1. Notes on Repair Parts 4-1
4-2. Exploded Views 4-2
4-3. Electrical parts List 4-18

5. Block Diagrams

Overall (1/2) 5-1
Overall (2/2) 5-2
C (1/5), Q (1/4) 5-3
C (2/5), Q (2/4) 5-4
C (3/5), Q (3/4) 5-5
C (4/5), Q (4/4), U, V, NR 5-6
C (5/5) 5-7
F, GA, GB 5-8

6. Diagrams

6-1. Frame Schematic Diagrams 6-2
Frame (1/2) 6-2
Frame (2/2) 6-3
6-2. Schematic Diagrams and Printed Wiring Boards 6-4
Schematic Diagrams
Q (1/9) 6-6
Q (2/9) 6-7
Q (3/9) 6-8
Q (4/9) 6-9
Q (5/9) 6-10
Q (6/9) 6-11
Q (7/9) 6-12
Q (8/9) 6-13
Q (9/9) 6-14
C (1/19) 6-17
C (2/19) 6-18
C (3/19) 6-19
C (4/19) 6-20
C (5/19) 6-21
C (6/19) 6-22
C (7/19) 6-23
C (8/19) 6-24
C (9/19) 6-25
C (10/19) 6-26
C (11/19) 6-27

C (12/19) 6-28
C (13/19) 6-29
C (14/19) 6-30
C (15/19) 6-31
C (16/19) 6-32
C (17/19) 6-33
C (18/19) 6-34
C (19/19) 6-35
GA 6-39
GB (1/3) 6-42
GB (2/3) 6-43
GB (3/3) 6-44
F 6-47
U 6-18
V 6-18
NR 6-18
Printed Wiring Boards
Q 6-4
C 6-36
GA 6-38
GB 6-40
F 6-46
NR 6-46
U 6-46
V 6-46

Section 1
Service Information

1-1. Appearance Figure

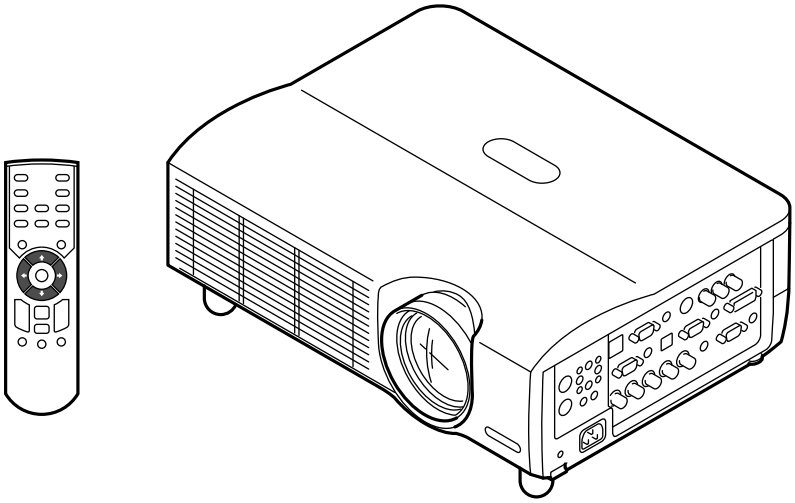

1-2. Board Locations

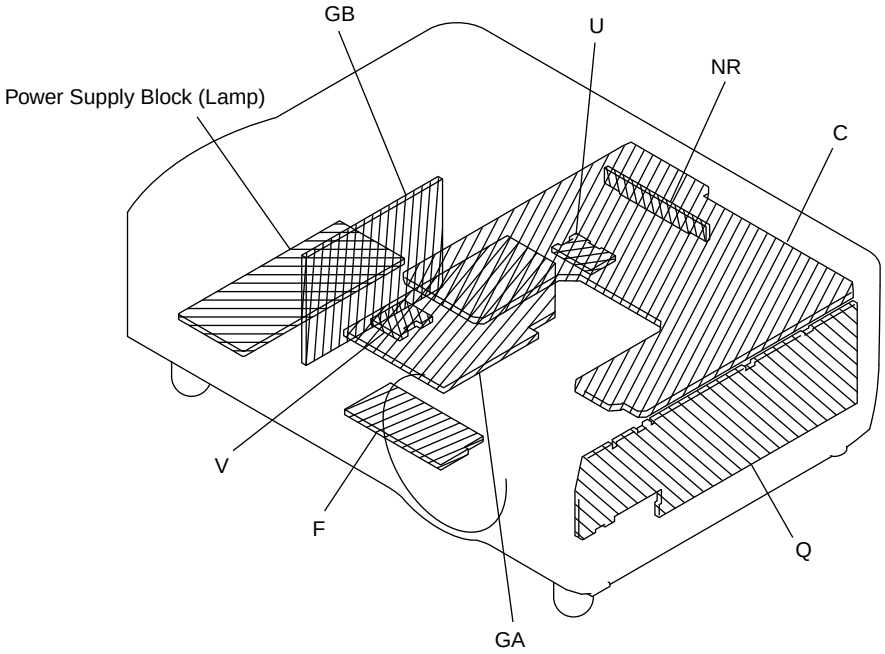

1-3. Disassembly

1-3-1. Top Cover Assy and Hood Assy Removal

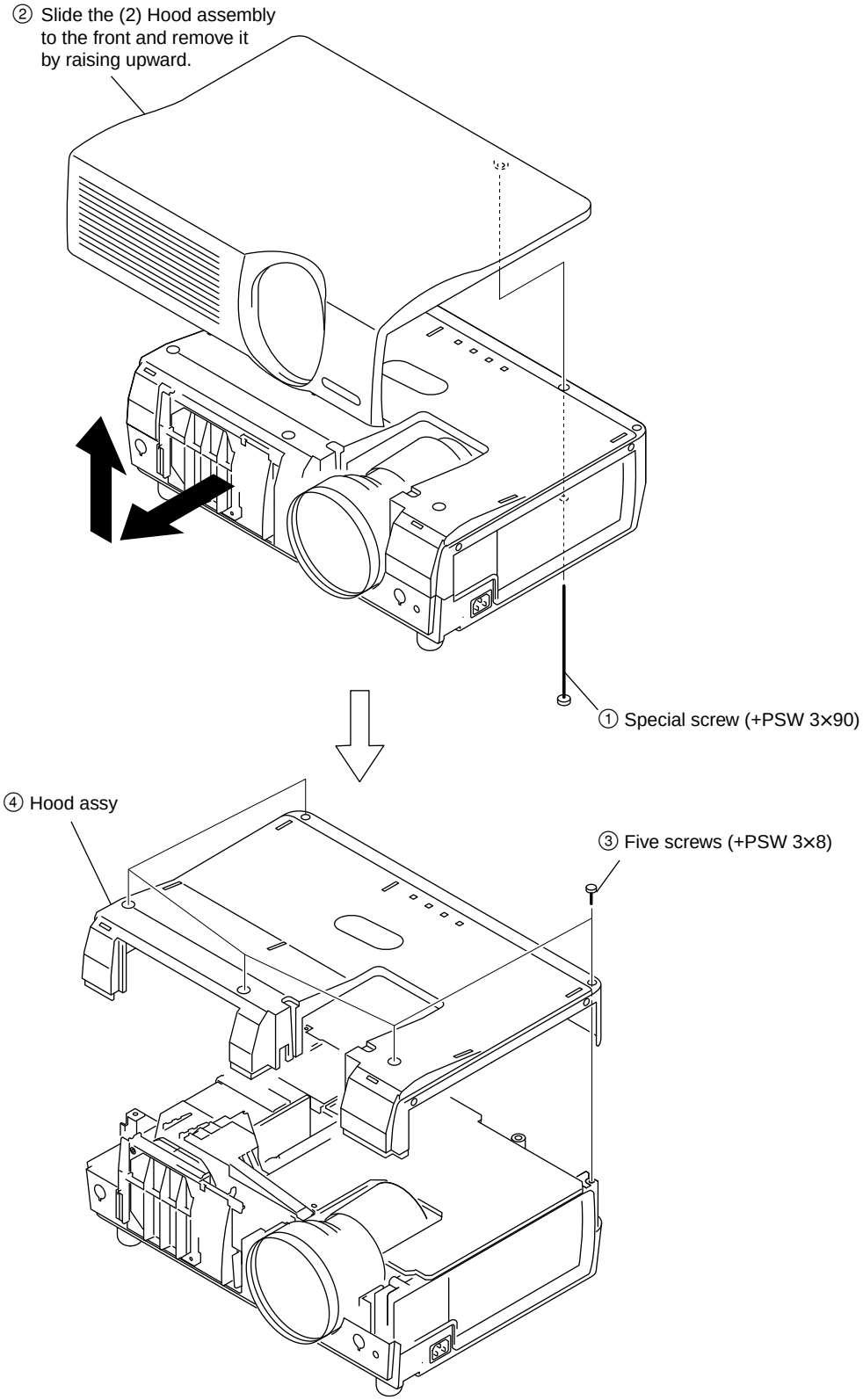

1-3-2. Projection Lens Removal

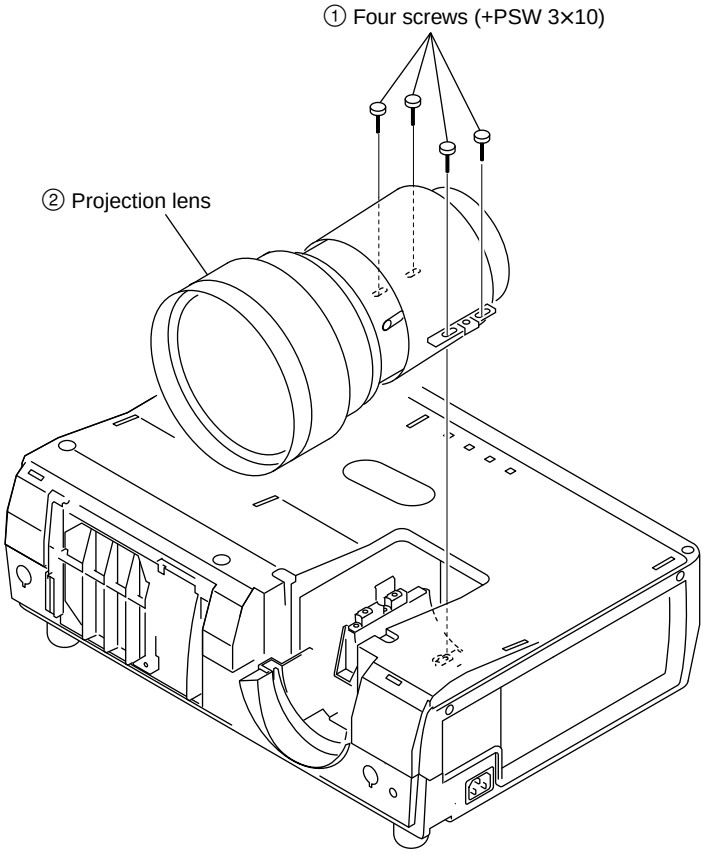

1-3-3. C Board Removal

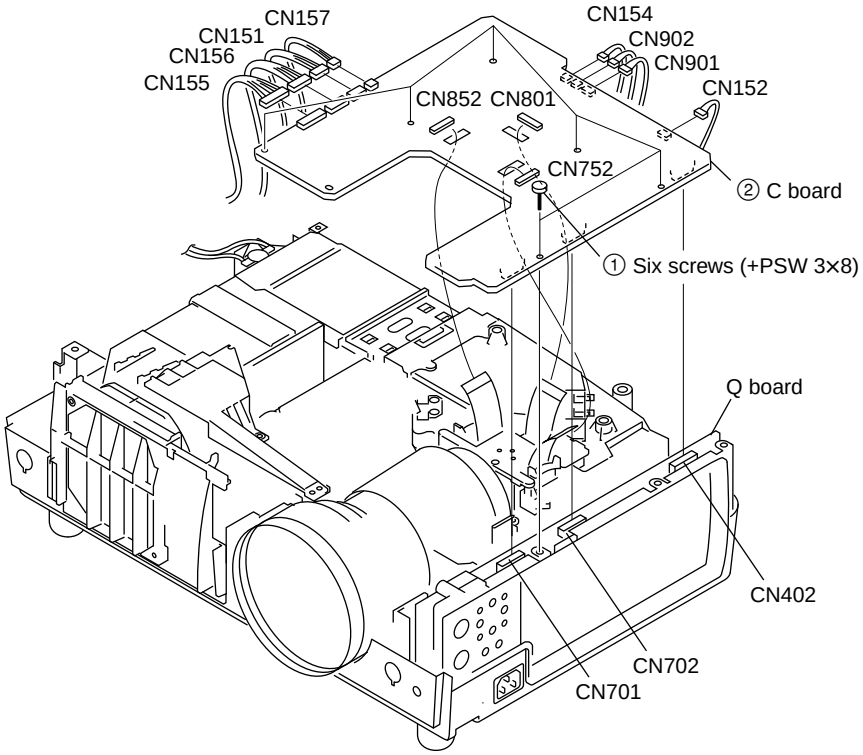

1-3-4. NR Board Removal

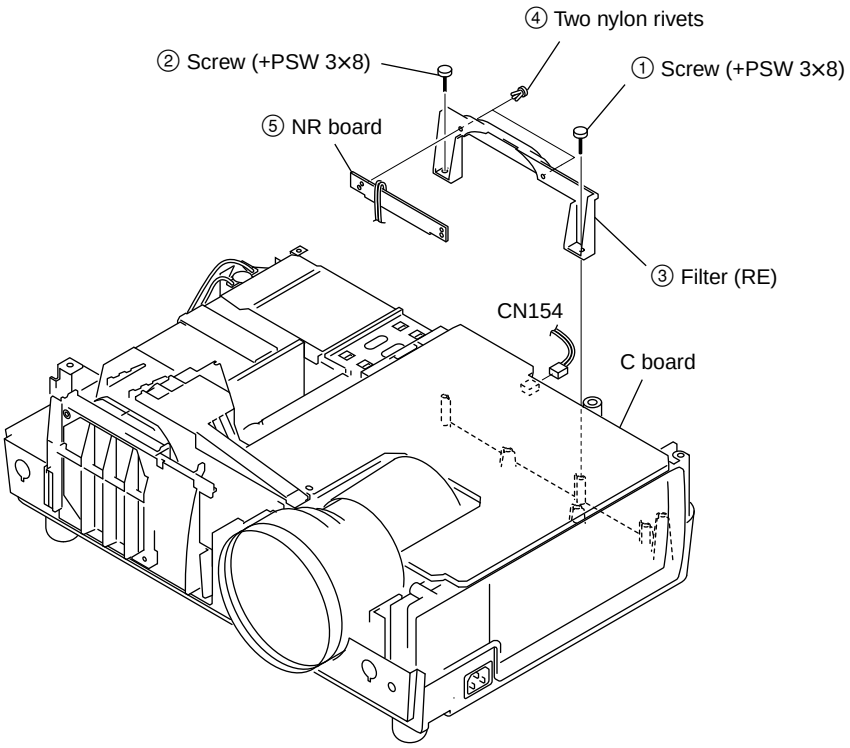

1-3-5. Side Panel Block Assy and Q Board Removal

✻ To remove the side panel block assy and Q board, remove the C board beforehand.

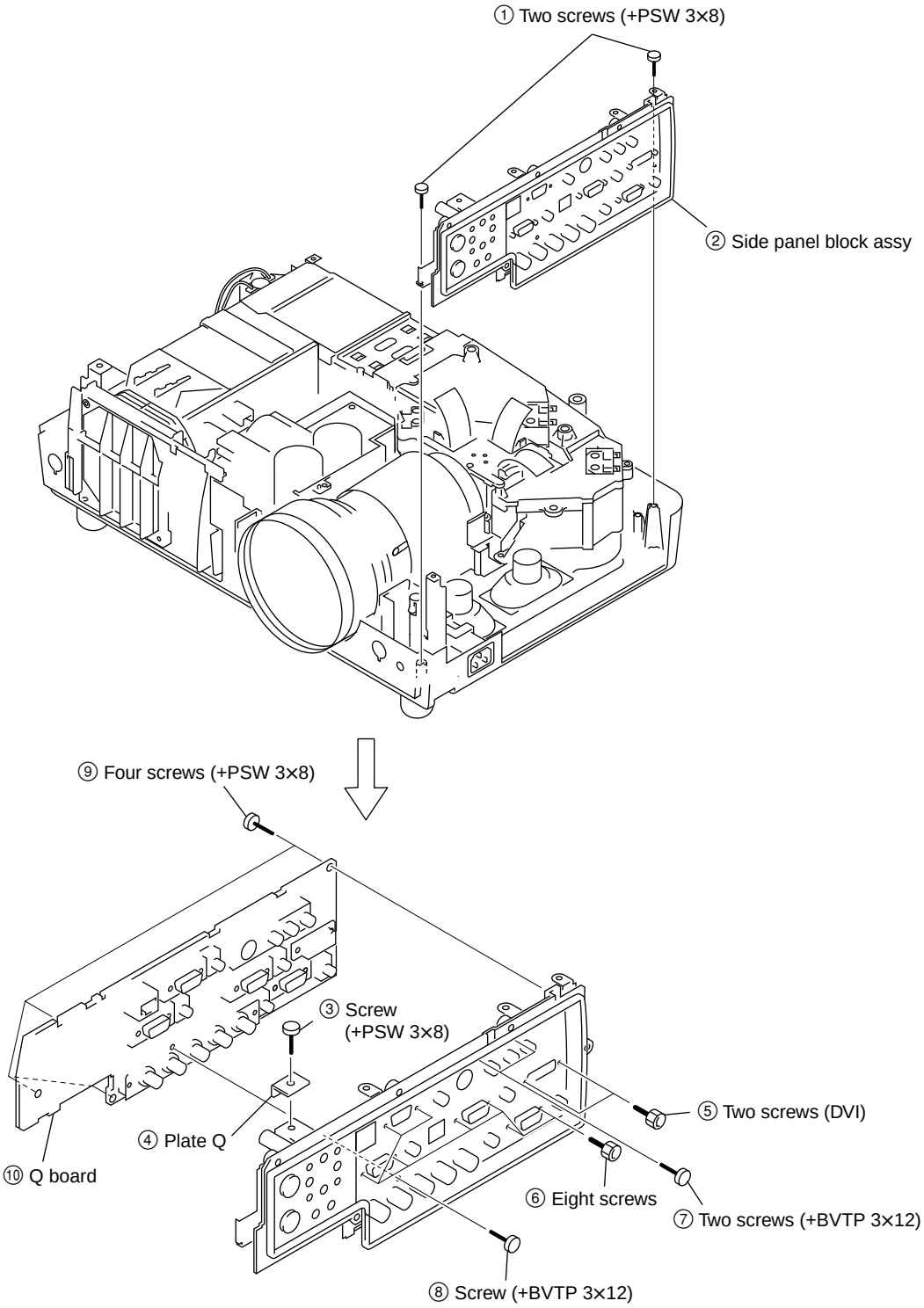

1-3-6. Bracket 92 and DC Fan 1 Removal

∗ To remove the bracket 92 and DC fan 1, remove the C board beforehand.

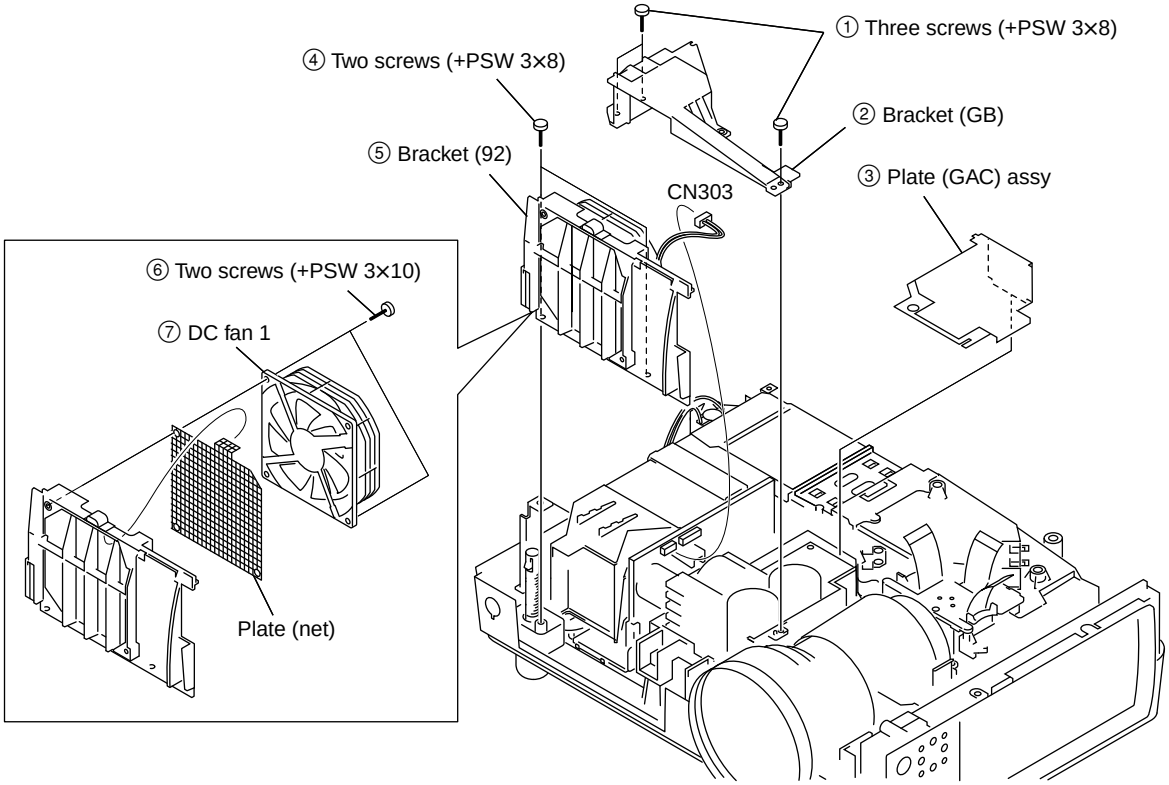

1-3-7. GA Board, GB Board and Bracket (G) Removal

∗ To remove the GA board, GB board and bracket (G), remove the C board beforehand.

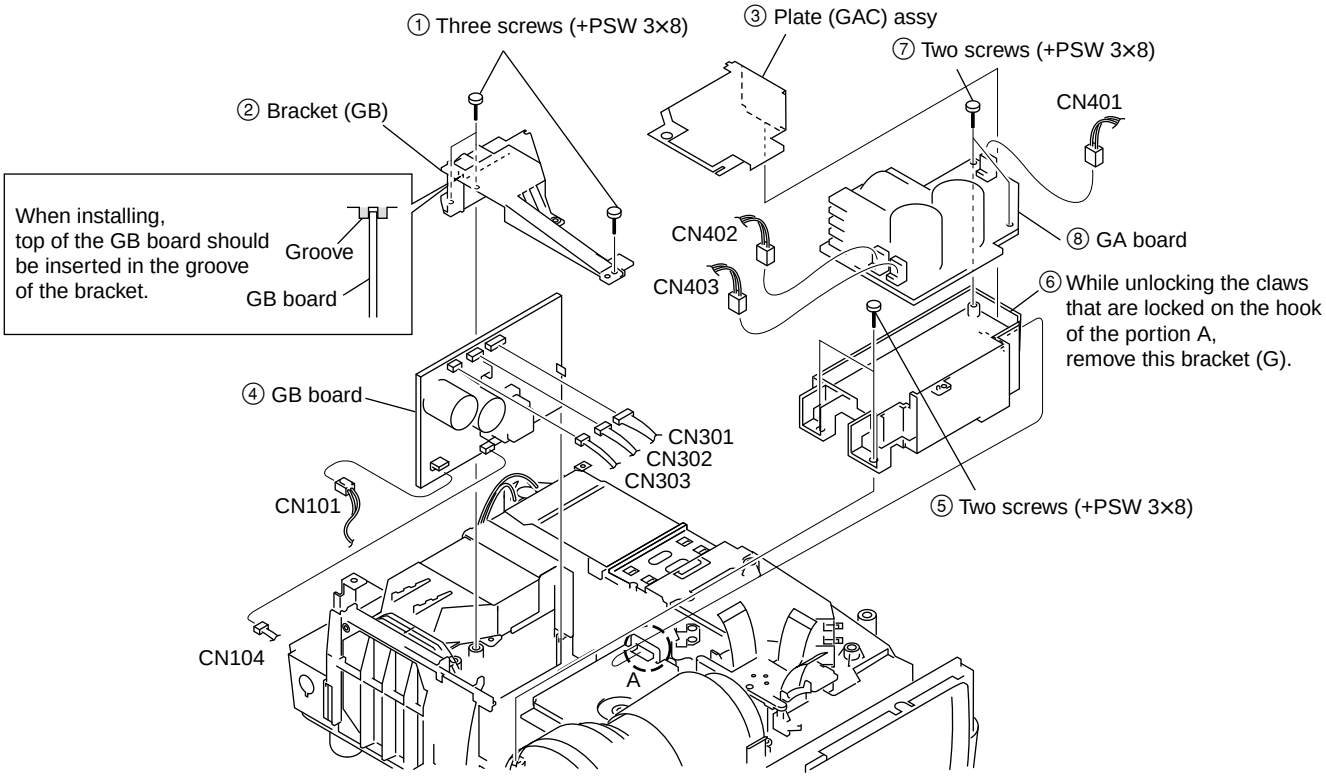

1-3-8. OPT UNIT Assy and Lamp Box Removal

✻ To remove the optics block assy, remove the C board beforehand.

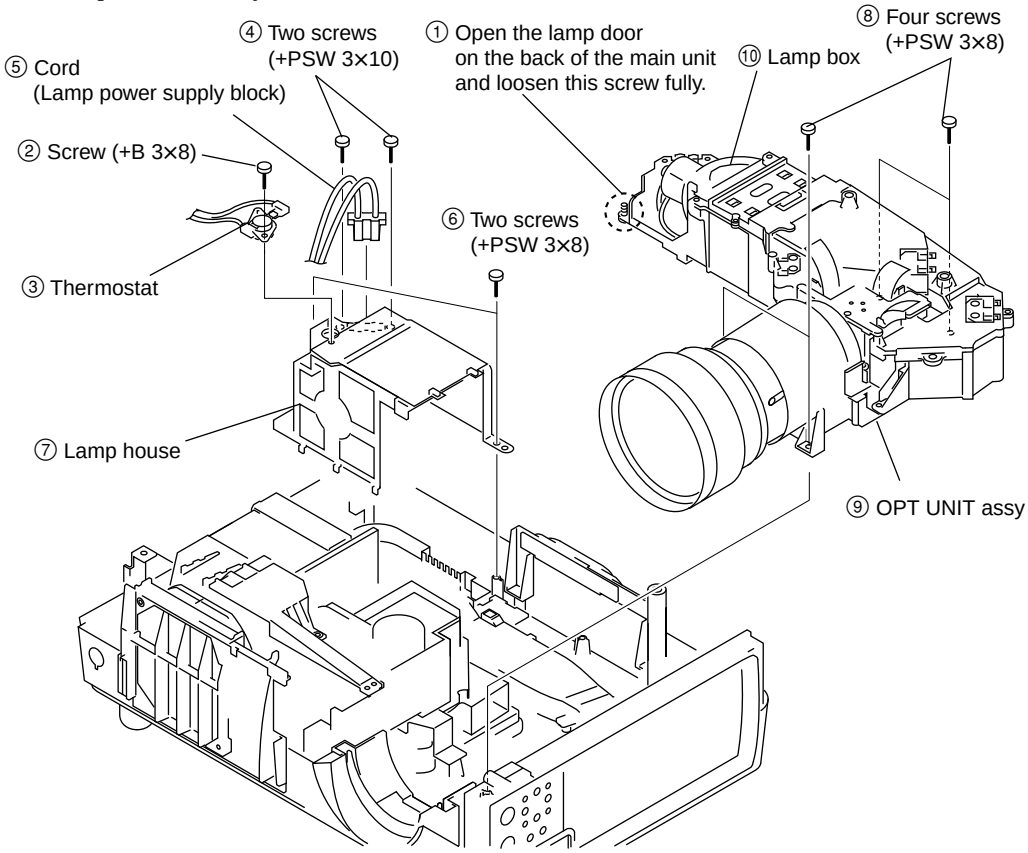

1-3-9. Prism Block Assy Removal

✻ To remove the prism block assy, remove the C board beforehand.

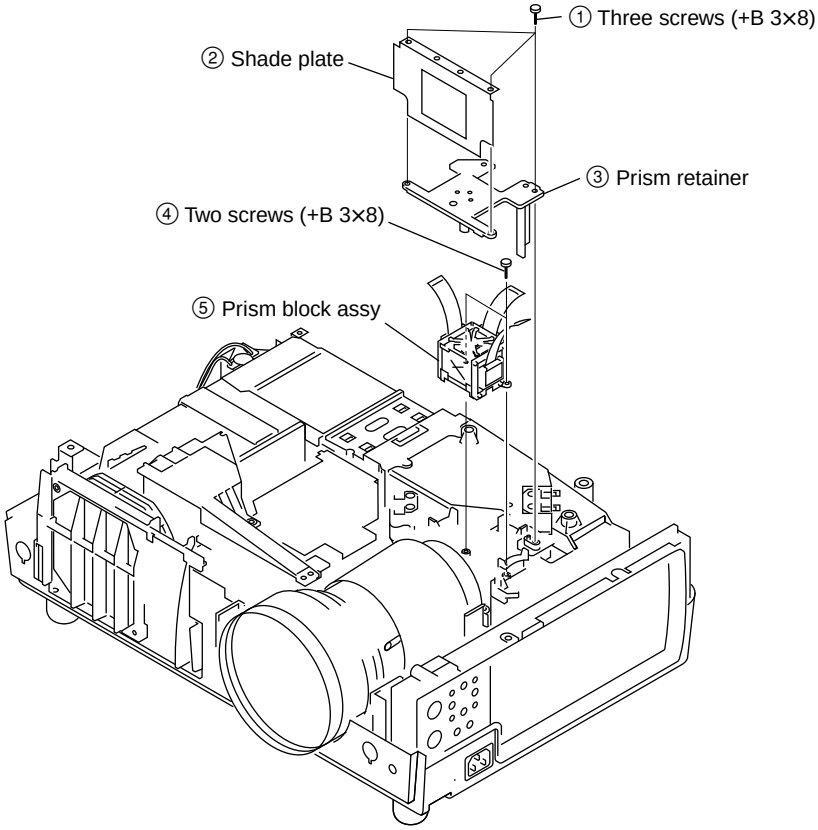

1-3-10. Bracket (BS), DC Fan 2 and Fan 1 Removal

∗ To remove the bracket (BS), DC fan 2 and fan 1, remove the C board, bracket 92 and GB board beforehand.

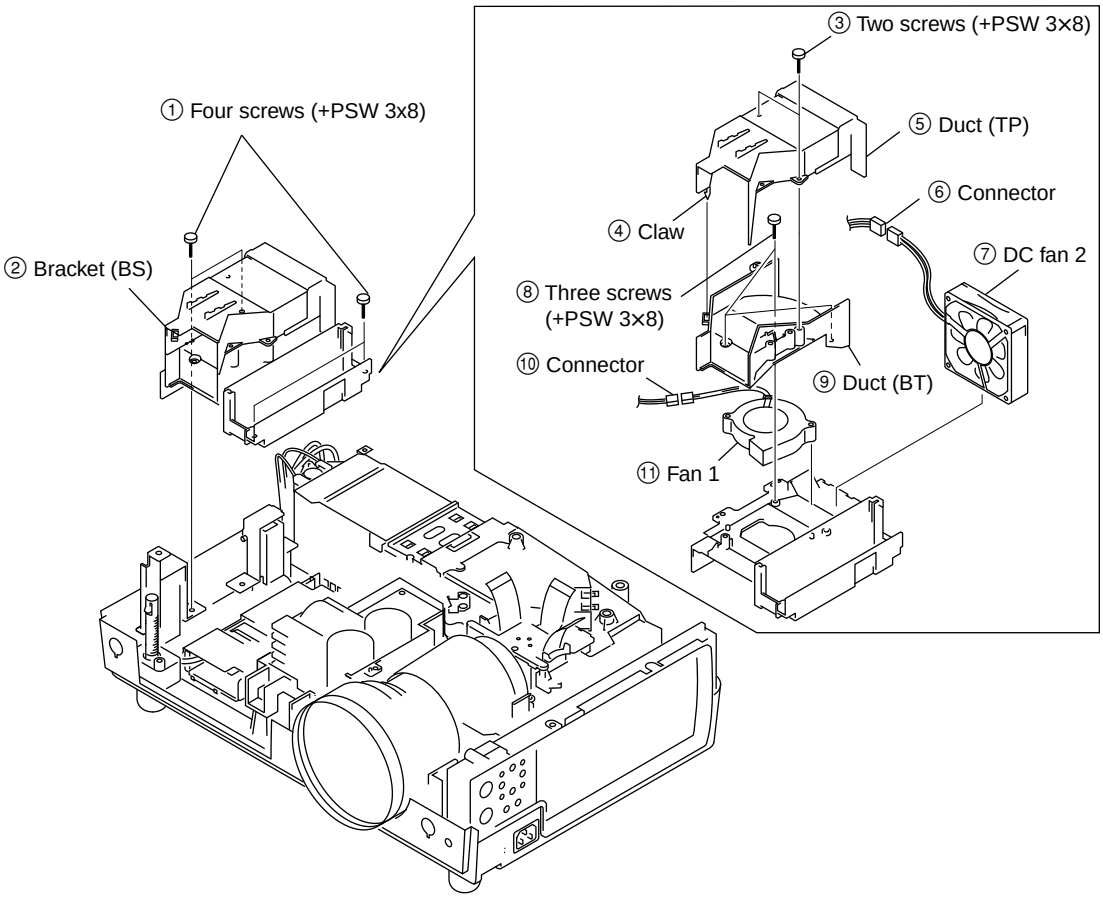

1-3-11. Lamp Power Supply Block and V Board Removal

✻ To remove the lamp power supply block and V board, remove the C board, bracket 92 and GB board beforehand.

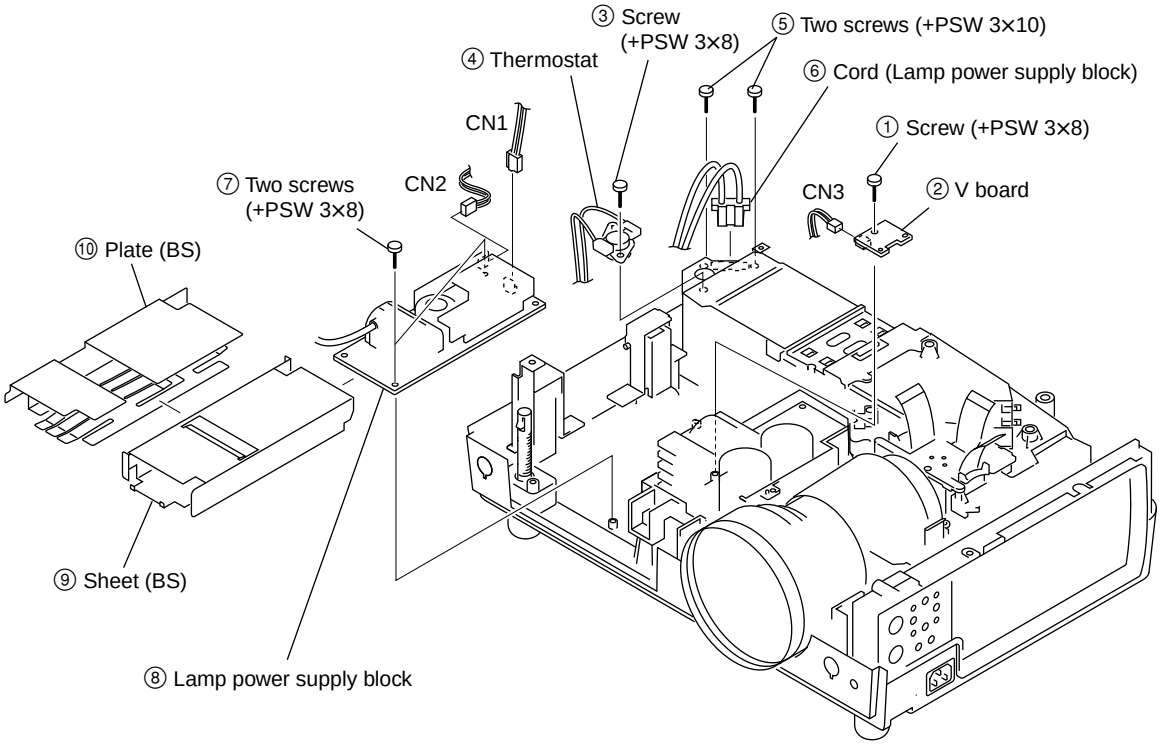

1-3-12. Fan 2 and U Board Removal

✻ To remove the fan 2 and U board, remove the C board, optical block assy and lamp box beforehand.

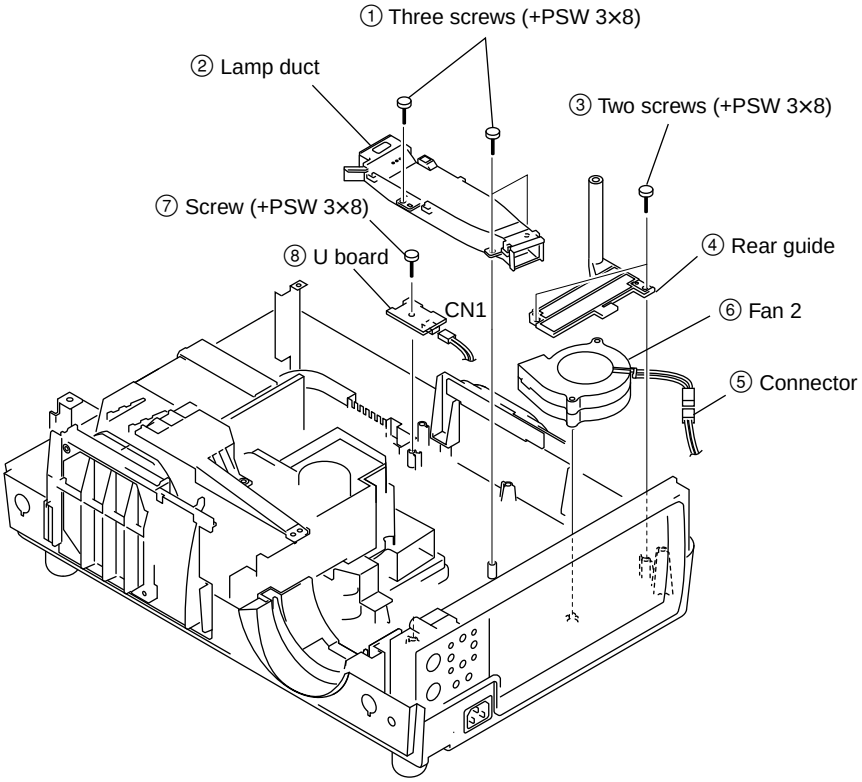

1-3-13. F Board Removal

∗ To remove the F board, remove the C board, OPT UNIT assy, lamp box and bracket (G) beforehand.

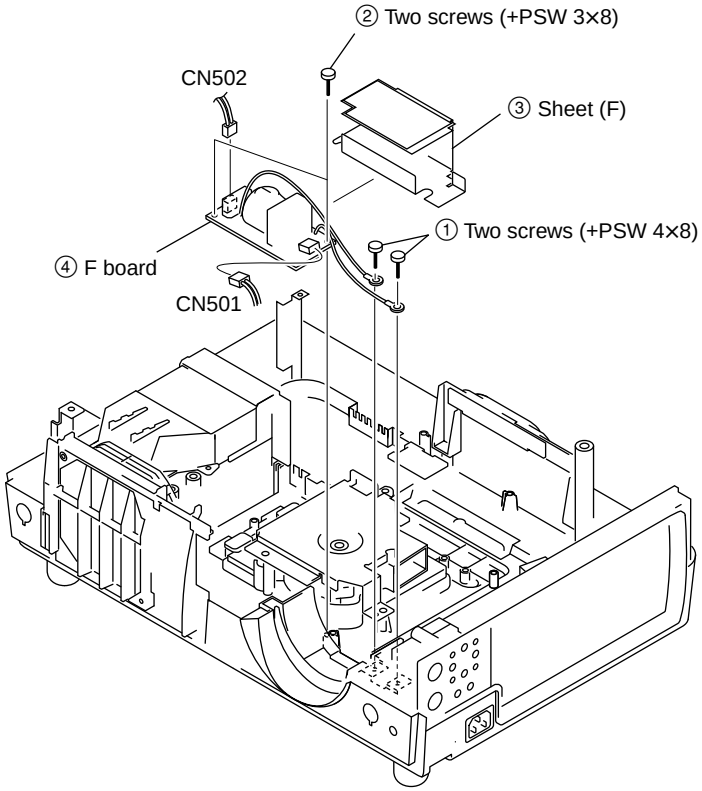

1-3-14. DC Fan 3 Removal

∗ To remove the DC fan 3, remove the C board, OPT UNIT assy, lamp box, lamp duct, bracket 92, bracket (BS) and bracket (G) beforehand.

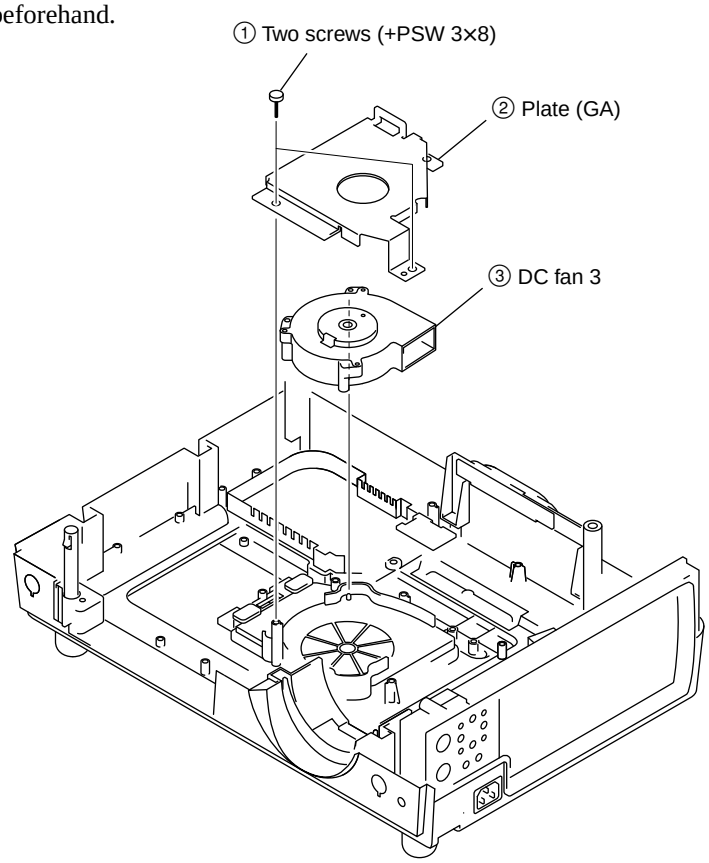

1-4. Extension Boards and Extension Cables

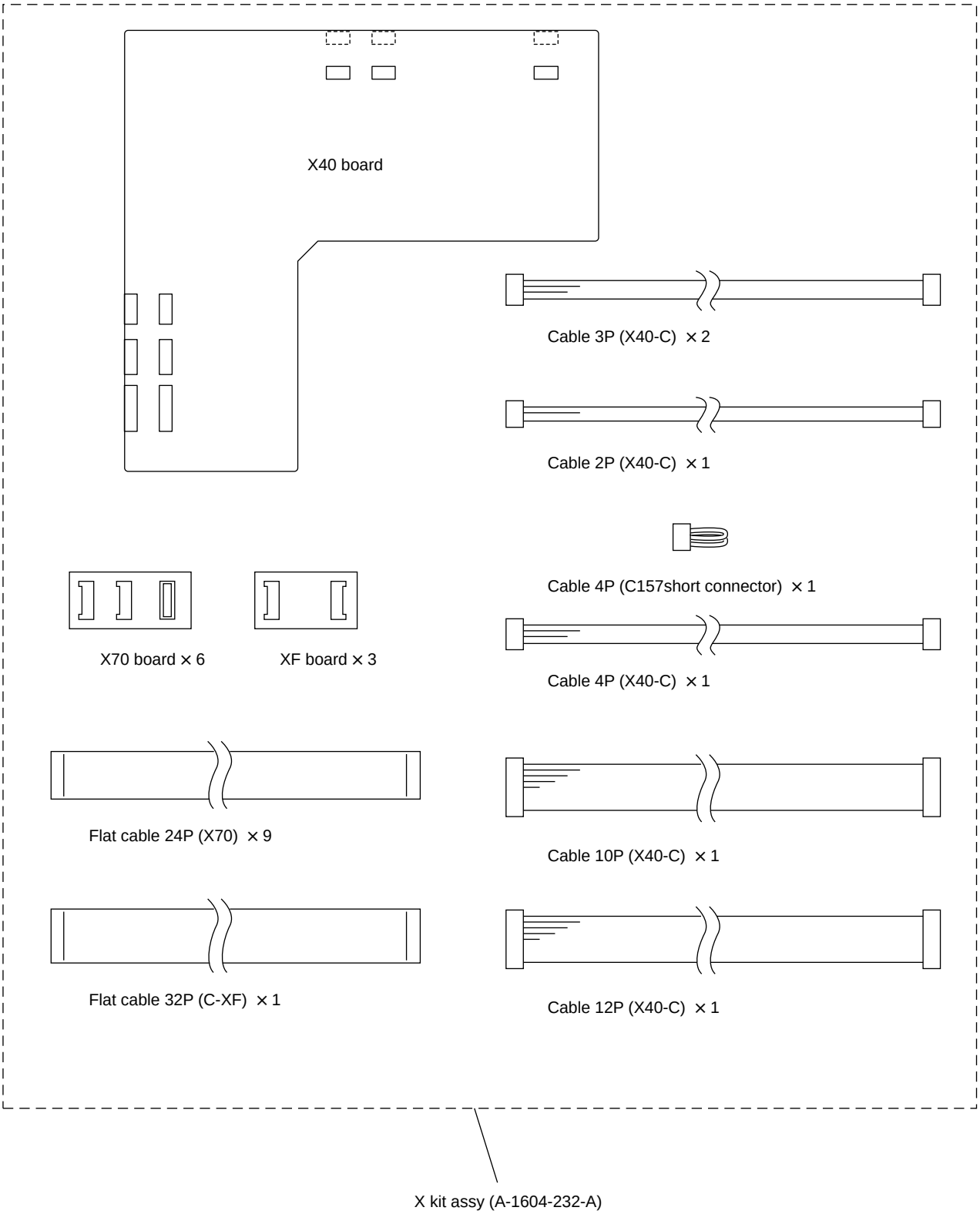

1-4-1. Connection

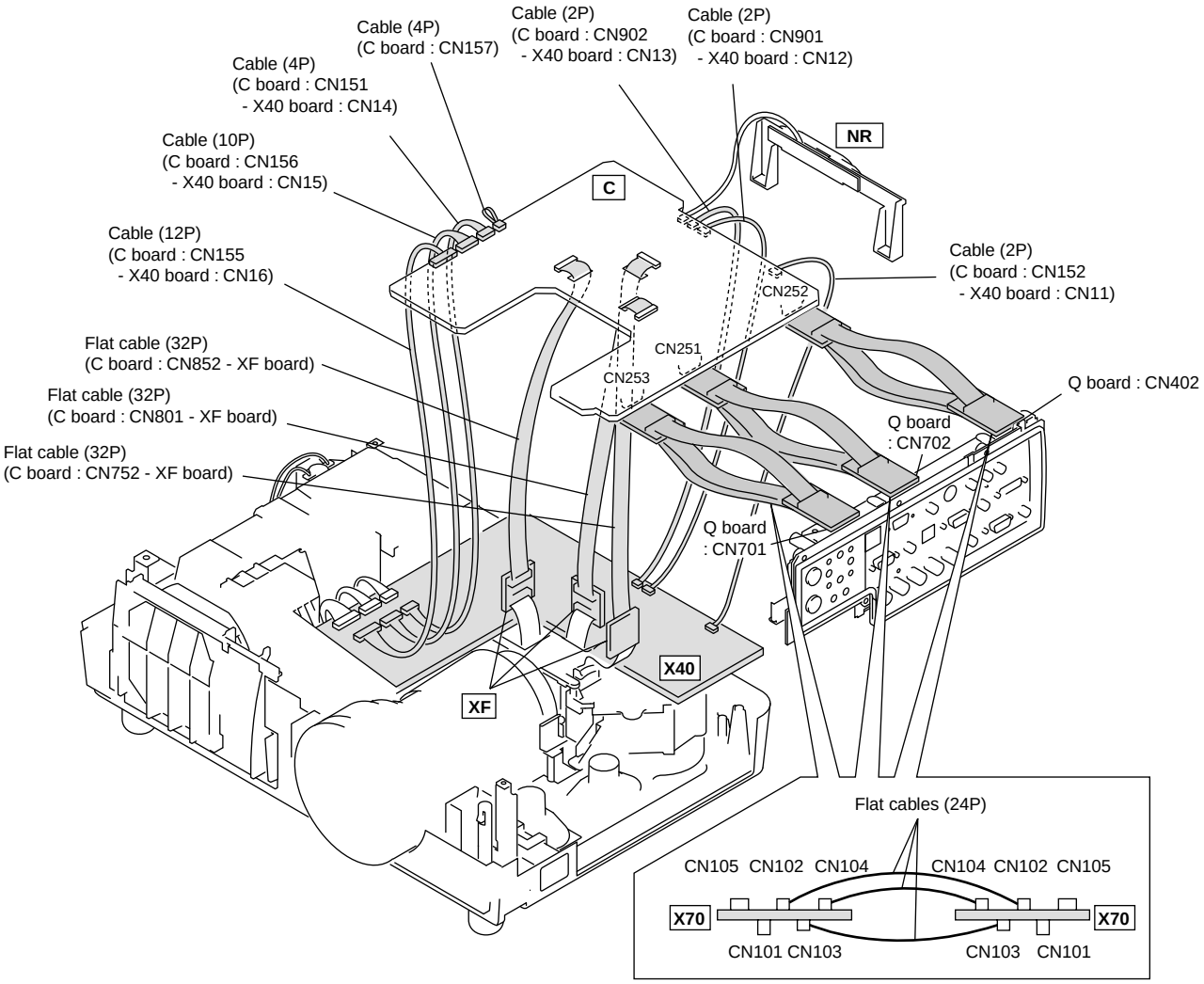

1-5. Warning on Power Connection

Use a proper power cord for your local power supply.

	The United States, Canada		Continental Europe		UK, Ireland, Australia, New Zealand	Japan
Plug type	VM0233	290B	YP-12A	COX-07	–[1)]	YP332
Female end	VM0089	386A	YC-13B	COX-02	VM0310B	YC-13
Cord type	SJT	SJT	H05VV-F	H05VV-F	N13237/CO-228	VCTF
Rated Voltage & Current	10A/125V	10A/125V	10A/250V	10A/250V	10A/250V	7A/125V
Safety approval	UL/CSA	UL/CSA	VDE	VDE	VDE	DENAN
Cord length (max.)	4.5m (177 1/4 inches)		–			

1) Use the correct plug for your country.

Section 2
Electrical Adjustments

2-1. Preparation

2-1-1. Required Equipment

- Oscilloscope
  Tektronix 2465 or equivalent (350 MHz band width or more)
- NTSC, PAL, SECAM component signal generator
  Tektronix TG2000 + AVG1 (option module) + AWVG1 (option module) or equivalent
- VG (programmable video signal generator)
  VG814 or equivalent
- Digital voltmeter
  Advantest TR6845 or equivalent
- Illuminance meter

Note

Allow the warm-up time of 5 minutes after the power is on before starting the following adjustments.

2-1-2. How to Enter the Factory Mode

1. Confirm that the MENU can be displayed.
2. Close the MENU.
3. Press the keys in the following order : [ENTER] → [ENTER] → [←] → [ENTER].
   The message [Do you want to enter the Factory Mode? Yes : ↑ No : ↓] appears.
   Select [Yes : ↑].

[Supplementary information: How to Exit the Factory Mode]

Perform the step 3 KEY operation.
The message [Do you want to return to the User Mode? Yes : ↑ No : ↓] appears.
Select [Yes : ↑].

2-2. V COM Adjustment

1. Input the green-only, 30 IRE single-line ON/OFF signal to the input connector.
   (XGA signal)
2. Enter the G VCOM adjustment screen of the Device Adjust.
3. Adjust the G VCOM value so that the flicker is minimal.
4. Switch the input signal from green-only to red-only (30 IRE) then to blue only (50 IRE) single-line ON/OFF signal. In the same way as step 3, adjust the R VCOM and B VCOM values respectively so that the flicker is minimal.
5. Take note of the adjustment values.
6. Set the “Image Flip” to either V or HV.
7. Input the above R/G/B adjustment values.
8. Take note of the adjustment values.
9. Set the “Image Flip” to OFF.

2-3. Initial Values of Adjustment Items

MenuTitle	ItemName	MemoryName												Remark
		Set Memory	Status Memory	Picture Memory						W/B Memory				
				Video / S Video		Input A / B / C		Input D		Video		Computer		
				Dynamic	Standard	Dynamic	Standard	Dynamic	Standard	High	Low	High	Low	
PICTURE SETTING	Picture Mode		Standard											
	Adjust Picture...													
	Contrast			95	80	95	80	95	80					
	Brightness			50	50	50	50	50	50					
	Color			50	50	–	–	50	50					
	Hue			50	50	–	–	50	50					
	Sharpness			50	50	–	–	50	50					
	RGB Enhancer			–	–	30	30	30	30					
	Black Level Adj.			Off	Off	–	–	Off	Off					
	Gamma Mode			–	–	Graphics	Graphics	Graphics	Graphics					
	Color Temp.			Low	Low	High	High	High	High					
	DDE			Film	Film	–	–	Film	Film					
	Volume	30												
INPUT SETTING	Adjust Signal...													
	Dot Phase		15 (*)											
	H Size		*											
	Shift		*											
	Wide Mode			Off	Off	–	–	Off	Off					
	Scan Conv			–	–	On	On	On	On					
SET SETTING	Smart APA	On												
	Auto Input Search	Off												
	Input-D Signal Sel.	Computer												
	Color System	Auto												
	Speaker	On												
	Power Saving	Off												
	IR Reciever	Front & Rear												
	Illumination	On												

MenuTitle	ItemName	MemoryName												Remark
		Set Memory	Status Memory	Picture Memory						W/B Memory				
				Video / S Video		Input A / B / C		Input D		Video		Computer		
				Dynamic	Standard	Dynamic	Standard	Dynamic	Standard	High	Low	High	Low	
MENU SETTING	Status	On												
	Language	English												
	Menu Position	Center												
	Menu Color	White												
INSTALL SETTING	V Keystone	0												
	Image Flip	Off												
	Background	Blue												
	Lamp Mode	Standard												
	Direct Power On	Off												
	High Altitude	Off												
	Security Lock	Off												
	Key	Enter × 4												
INFORMATION	fH	Display only												
	fV	Display only												
	(Memory No.)	Display only												
	(Resolution)	Display only												
	Lamp Timer	Display only												
	ROM Version	Display only												
	SC ROM Version	Display only												
	Operation Timer	Display only												
	Prev. Lamp Timer	Display only												
	IP Address	Display only												
	Sub Net Mask	Display only												
W/B SETTING	Gain R									140	140	140	140	
	G									140	140	140	140	
	B									140	140	140	140	
	Bias R									85	85	85	85	
	G									85	85	85	85	
	B									85	85	85	85	

∗ The “Dot Phase E, H Size, Shift H/V and Picture Mode” items in the “INPUT SETTING” menu have their respective initial values for each input signal (PRESET MEMORY No.).

Note

There are some adjustment items that cannot be adjusted, depending on the input signal.

Device Name	Item Name		Memory Name																	Re-mark
			Set Memory	Status Memory	Chroma Memory							Channel Memory						Image Flip Memory		
					NT358/ NT443/ BW60	Pal/Pal-M/ N/Secam/ BW50	15kRGB	Component (15k)	Double-speed component	HDTV (YP b Pr)	HDTV (GBR) includ. double-speed	Video	S Video	Input -A	Input -B	Input -C	Input -D	Up/ Down inversion possible	Up/ Down inversion not possible	
A/D Converter	ADC/	Clamp Position		∗2																
		Clamp Width		∗2																
		R Gain (Other)										–	–	100	100	–	100			
		R Gain (Component)										–	–	–	–	–	100			
		R Gain (VideoGBR)										–	–	–	–	–	100			
		G Gain (Other)										–	–	100	100	–	100			
		G Gain (Component)										–	–	–	–	–	100			
		G Gain (VideoGBR)										–	–	–	–	–	100			
		B Gain (Other)										–	–	100	100	–	100			
		B Gain (Component)										–	–	–	–	–	100			
		B Gain (VideoGBR)										–	–	–	–	–	100			
		R Offset (Other)										–	–	128	128	–	128			
		R Offset (Component)										–	–	–	–	–	128			
		R Offset (VideoGBR)										–	–	–	–	–	128			
		G Offset (Other)										–	–	128	128	–	128			
		G Offset (Component)										–	–	–	–	–	128			
		G Offset (VideoGBR)										–	–	–	–	–	128			
		B Offset (Other)										–	–	128	128	–	128			
		B Offset (Component)										–	–	–	–	–	128			
		B Offset (VideoGBR)										–	–	–	–	–	128			
		Sync Sep Th	32																	
		Pre Coast		2																
		Post Coast		8																

Device Name	Item Name		Memory Name																	Re-mark
			Set Memory	Status Memory	Chroma Memory							Channel Memory						Image Flip Memory		
					NT358/ NT443/ BW60	Pal/Pal-M/ N/Secam/ BW50	15kRGB	Component (15k)	Double-speed component	HDTV (YP b Pr)	HDTV (GBR) includ. double-speed	Video	S Video	Input -A	Input -B	Input -C	Input -D	Up/ Down inversion possible	Up/ Down inversion not possible	
Chroma/ D.Comb	Chroma/	Ch1 Gain (PX40)										20	20	144	144	144	144			
		Ch1 Gain (PX35)										20	20	144	144	–	144			
		Ch2 Gain (PX40)										144	16	160	160	160	160			
		Ch2 Gain (PX35)										144	16	160	160	–	160			
		Video Brt			137	123	128	128	–	–	–									
		Video Cont			70	73	64	64	–	–	–									
		Sub Color (PX40)			86	86	72	78	–	–	–									
		Sub Color (PX35)			67	63	72	78	–	–	–									
		LCBW (PX40)										6	6	6	6	6	6			
		LCBW (PX35)										6	6	6	6	–	6			
		Y-DeLay	∗1																	
		Ch3 Gain (PX40)										144	144	160	160	160	160			
		Ch3 Gain (PX35)										144	144	160	160	–	220			
		Ch4 Gain (PX40)										144	144	160	160	160	160			
		Ch4 Gain (PX35)										144	144	160	160	–	220			
		YUV Brt			128	128	130	128	–	–	–									
		YUV Cont			64	64	73	72	–	–	–									
		AOSL	–																	
		1E	Display only																	
		1F	Display only																	
Panel Driver	P.Drv	Offset R																208	208	
		Offset G																208	208	
		Offset B																208	208	
		V Common R																40	40	
		V Common G																45	45	
		V Common B																55	55	
		Psig 1	140																	
		Psig 2	52																	
		Signal Center	196																	
		Gain R	160																	
		Gain G	160																	
		Gain B	160																	
		DCFB Off	1																	

Device Name	Item Name		Memory Name																	Re-mark
			Set Memory	Status Memory	Chroma Memory							Channel Memory						Image Flip Memory		
					NT358/ NT443/ BW60	Pal/Pal-M/ N/Secam/ BW50	15kRGB	Component (15k)	Double-speed component	HDTV (YP b Pr)	HDTV (GBR) includ. double-speed	Video	S Video	Input -A	Input -B	Input -C	Input -D	Up/ Down inversion possible	Up/ Down inversion not possible	
Panel Driver	Sample Hold/	SH1	8																	
	Other/	V Com Ptn Enb	Non Adjustable																	
		Installation	0																	
Other	3D Gamma	Sub Cont	0																	
		Sub Brt	0																	
		R Osd Lvl	31																	
		G Osd Lvl	31																	
		B Osd Lvl	31																	
		Through	0																	
		SW	1																	
		APC Thres	25																	
		APC Limit	32																	
	Other/	V Start	22																	
		H Start(MSB)	145																	
		H Start(LSB)	0																	
		H Position	17																	
		HST Position	19																	
		HST Phase	3																	
		Temp Lamp	Non Adjustable																	
		Temp Panel	Non Adjustable																	
		Fan1 H																Non Adjustable	Non Adjustable	
		Fan1 L																Non Adjustable	Non Adjustable	
		Fan2 H																Non Adjustable	Non Adjustable	
		Fan2 L																Non Adjustable	Non Adjustable	
		Fan3 H																Non Adjustable	Non Adjustable	
		Fan3 L																Non Adjustable	Non Adjustable	
		Synchronous	0																	
	(PX40)	Tilt C0	Non Adjustable																	
		Tilt C1	Non Adjustable																	
		Tilt C2	Non Adjustable																	
		X Tilt	Non Adjustable																	
		Y Tilt	Non Adjustable																	

Device Name	Item Name		Memory Name																	Re-mark
			Set Memory	Status Memory	Chroma Memory							Channel Memory						Image Flip Memory		
					NT358/ NT443/ BW60	Pal/Pal-M/ N/Secam/ BW50	15kRGB	Component (15k)	Double-speed component	HDTV (YP b Pr)	HDTV (GBR) includ. double-speed	Video	S Video	Input -A	Input -B	Input -C	Input -D	Up/ Down inversion possible	Up/ Down inversion not possible	
Other	Other/	TL	Display only																	
		TP	Display only																	
		Highland Mode	0																	
Gamma			Factory adjustment value																	
IP	Ip/	CTI Tap	3																	
		CTI Shift	1																	
		CTI Limit	128																	
		CTI Gain (PX40)	0																	
		CTI Gain (PX35)	20																	
		Sharp Limit	255																	
		MD Thresh C	8																	
		MD Thresh 0	16																	
		VS	1																	
		Continue	1																	
		Edit Detect	0																	
		Indicator	0																	
		Manual	0																	
		Manual Pair	0																	
		Manual State	0																	
		Field Times	2																	
		Noise Thresh	4																	
		Disp Area	0																	
		PULL Area T	71																	
		PULL Area B	190																	
		PULL Area L	165																	
		PULL Area R	690																	
		VS Limit	64																	
		VS Core	4																	
		Edge Det Less	0																	
		Mode	0																	
		X Only	0																	
		Hysteresis	1																	
		Hysteresis Data	2																	
		Thresh Still Large	2																	

Device Name	Item Name		Memory Name																	Re-mark
			Set Memory	Status Memory	Chroma Memory							Channel Memory						Image Flip Memory		
					NT358/ NT443/ BW60	Pal/Pal-M/ N/Secam/ BW50	15kRGB	Component (15k)	Double-speed component	HDTV (YP b Pr)	HDTV (GBR) includ. double-speed	Video	S Video	Input -A	Input -B	Input -C	Input -D	Up/ Down inversion possible	Up/ Down inversion not possible	
IP	Ip/	Thresh Still Med	3																	
		Thresh Still Small	4																	
		22 Pre Post Rate	15																	
		22 Pre Post Thresh	2																	
		Film Times 22	3																	
	Ip2/	Sudare Rate 32	4																	
		Sudare Thresh 32	64																	
		Sudare Rate 22	4																	
		Sudare Thresh 22	40																	

Notes

- There are some adjustment items that cannot be adjusted, depending on the input signal.
- ∗ 1 : The value changes depending on the color systems and input terminals.
- ∗ 2 : The value changes depending on the input signals.

2-4. Service Know-How

2-4-1. When the Prism Block Is Replaced

1. Perform the V COM adjustment. (Refer to Section “2-2. VCOM Adjustment”.)
2. Write the GAMMA data of the prism block.
3. Perform the white balance adjustment. (Refer to Section “2-5. White Balance Adjustment”.)

2-4-2. When the C Board Is Replaced

Note

If any board other than the C board is replaced, there is not adjustment item.

1. Install IC706 of the C board before replacement, into the new C board.
2. Enter the Factory Mode.
3. Perform the V COM adjustment. (Refer to Section “2-2. VCOM Adjustment”.)
4. If the white balance is significantly poor, perform the white balance adjustment. . (Refer to Section “2-5. White Balance Adjustment”.)

2-5. White Balance Adjustment

Preparation before adjustment

1. Input the 100 IRE flat field signal to the INPUT-D connector and allow the warm-up of 10 minutes aging at a minimum.
2. Enter the Service Mode.
   Press the keys in the following order.
   [ENTER] → [ENTER] → [↑] → [↓] → [ENTER].
   The message [Do you want to enter the Service Mode? Yes : ↑ No : ↓] appears.
   Select [Yes : ↑].

[Supplementary information: How to Exit the Service Mode]

Perform the step 2 KEY operation.
The message [Do you want to return to the User Mode? Yes : ↑ No : ↓] appears.
Select [Yes : ↑].

2-5-1. HIGH Mode of INPUT-D

Connect the10-step signal to the INPUT-D connector and measure the chromaticities at each brightness.
If chromaticities are different at each brightness, perform the following adjustment.

1. Input the 100 IRE flat field signal to the INPUT-D connector.
2. Measure the chromaticity (x, y).
3. Input the 80 IRE flat field signal.
4. Adjust the GAIN R and GAIN B in the HIGH mode of W/B until the chromaticity (x, y) that is measured at step 2 is obtained.
5. Input the 30 IRE flat field signal.
6. Adjust the BIAS R and BIAS B in the HIGH mode of W/B until the chromaticity (x, y) that is measured at step 2 is obtained.
7. Repeat steps 3 to 6 until the chromaticity (x ±0.002, y ±0.004) with reference to the chromaticity (x, y) that is measured at step 2 is obtained.

2-5-2. LOW Mode of INPUT-D

1. Input the 80 IRE flat field signal to the INPUT-D connector.
2. In the LOW mode of W/B, adjust the GAIN R for +15 higher than the value in the HIGH mode, adjust the GAIN G for −25 lower than the value in the HIGH mode and adjust GAIN B that is the same as the value in the HIGH mode.
3. Adjust BIAS R, BIAS B and BIAS G for the same value as those of the HIGH mode.
4. Measure the chromaticity (x, y).
5. Input the 30 IRE flat field signal.
6. Adjust the BIAS R and BIAS B in the LOW mode of W/B until the chromaticity (x, y) that is measured at step 4 is obtained.
7. Input the 80 IRE flat field signal.
8. Adjust the GAIN R and GAIN B in the LOW mode of W/B until the chromaticity (x, y) that is measured at step 4 is obtained.
9. Repeat steps 5 to 8 until the chromaticity (x ±0.002, y ±0.004) with reference to the chromaticity (x, y) that is measured at step 4 is obtained.

2-5-3. HIGH Mode of VIDEO

1. Input the NTSC or PAL video signal to the input connector.
2. In the HIGH mode of W/B, adjust the GAIN R for −13 lower than the value in the INPUT-D HIGH mode, adjust the GAIN G for −11 lower than the value in the INPUT-D HIGH mode and adjust GAIN B that is the +35 higher than the value in the INPUT-D HIGH mode.
3. Adjust BIAS G, BIAS R and BIAS B for the same value as those of the INPUT-D HIGH mode.

2-5-4. LOW Mode of VIDEO

1. Input the NTSC or PAL video signal to the input connector.
2. In the LOW mode of W/B, adjust the GAIN R for +19 higher than the value in the INPUT-D LOW mode, adjust the GAIN G for −38 lower than the value in the INPUT-D LOW mode and adjust GAIN B that is the −18 lower than the value in the INPUT-D LOW mode.
3. Adjust BIAS G, BIAS R and BIAS B for the same value as those of the INPUT-D LOW mode.

2-6. Memory Structure

Memory Structure

CPU internal ROM : 384 K byte Flash Memory
CPU internal RAM : 24 K byte
External NVM memory : 8 K byte EEPROM

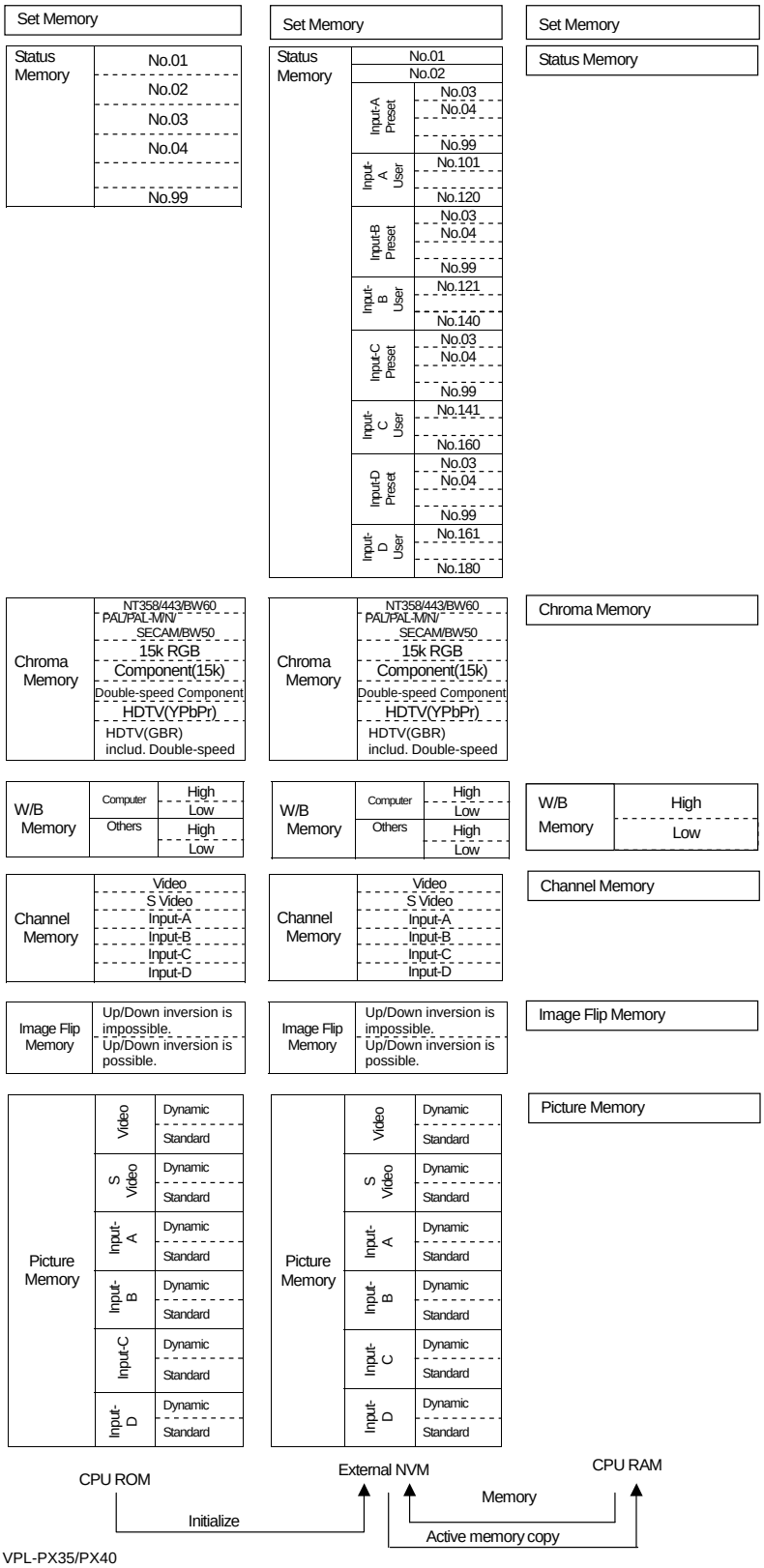

Memory structure of this model consists of the followings.

1 Set memory
2 Status memory
3 Chroma memory
4 W/B memory
5 Channel memory
6 Image Flip memory
7 Picture memory

∗ The gamma memory is realized by giving offset to the Contrast and Brightness output values to the devices in the gamma mode function.

Flow of data is described briefly. When the power plug is connected to the wall outlet for the first time (Standby state), all data that are stored in the internal ROM are written in the NVM (non-volatile memory). When the POWER is turned ON, all the status memory data and other memory data that are required for the present picture are selected from each memory block and expanded in the internal RAM.
When any adjustment is performed at this moment, the adjustment data (user mode items) are written in the NVM (Service/Factory items) automatically triggered by the memory operation.

The adjustment items (W/B, Device Adjust) that can be adjusted in the Service Mode or in the Factory Mode, are memorized in the NVM at the time when the user performs adjustment and performs the memory operation. Note that the factory adjustment data will be lost at this moment.

Section 3
Semiconductors

24LC21AT/SN
BA033F-E2
BA033FP
BA033FP-E2
GS1881-CTA
ICS332-SX1738
IRMF-A0T-QTP
LM358PS
LM358PSR
M24C02-WMN6T(A)
M24C64-WMN6T(B)
MAX1626ESA-TE2
MAX4223ESA-TG06
MAX4223ESA-TG068
MC33262DR2
NJM082M
SI4425DY-T1
SN75157PS
SN75157PS-ELL2000
SN75453BPS
SN75453BPSR
ST24FC21M6TR
TC7W126FU(TE12R)
TC7W53FK(TE85R)
TC7W53FK-TE85R
TC7WH04FK(TE85R)
TC7WH125FK(TE85R)
TC7WH14FK(TE85R)
TC7WH32FK(TE85R)
TC7WH32FK-TE85R
TC7WH74FK(TE85R)
TC7WH74FU(TE12R)
TL082CPS-E20
UPC358G2-E2
UPC393G2
UPC393G2-E2

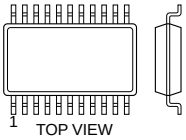

8pin SOP

74VHC00MTCX
74VHC02MTCX
HA4314BCB-E2
SN74AHCT04PWR
SN74LV08APWR
SN74LV125APWR
TC74VHCT04AFT(EL)
TC74VHCT08AFT(EL)
TC74VHCT08FT(EL)

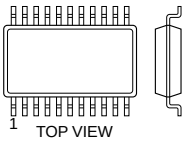

14pin SOP

74VHC123AMTCX
BU4052BCF-E2
MAX202CSE
MAX202CSE-T
MC74HC4052F
MC74HC4053AFEL
PC74HC123D-T
TC74HC4052AF(EL)
TC74HC4053AF(EL)

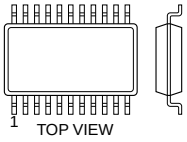

16pin SOP

78Q2120-64CGT
CXA7000R-T6

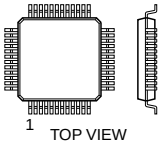

64pin QFP

AD9888KS-170

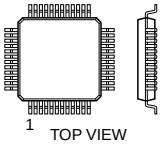

128pin QFP

BA00ASFP-E2

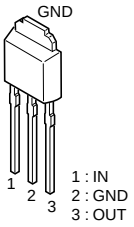

BA00AST
BA00AST-V5

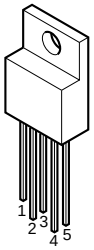

BA05FP-E2
BA09FP-E2
BA12FP-E2

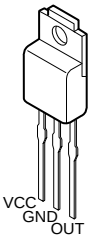

CXD9607GB

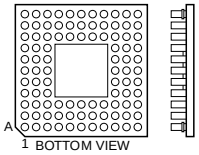

144pin PGA

CXD9721GG

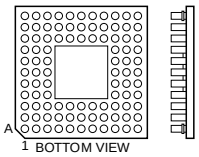

224pin PGA

CXD9746GG

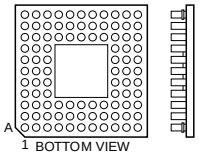

176pin PGA

HA17431UA(TL)
HA17431UA-TL

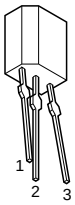

HD64F2377VFQ33V

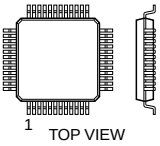

144pin QFP

HY57V161610DTC-7TR

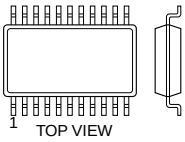

50pin SOP

L88M05T-FA-TL

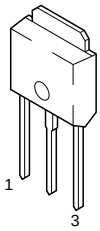

LM2990SX-5.0

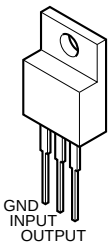

LP2985IM5X-3.3

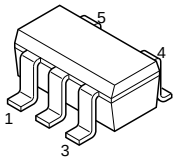

M52347FP-TE
SN74LV541APWR
TC74VHCT540AFT(EL)
TC74VHCT541AFT(EL)
TDA7309D013TR
TPA2000D2PWPR

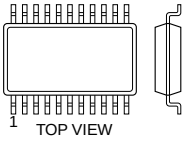

20pin SOP

M62392FP

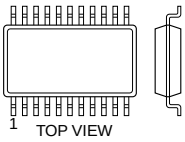

24pin SOP

MCZ3001D

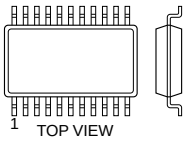

40pin SOP

MX29LV800TTC-70G-SX1738

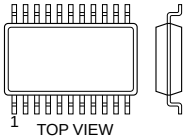

48pin SOP

PQ20VZ1U

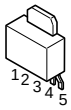

PQ2TZ15U

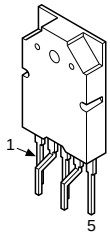

PST3628UL

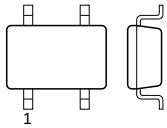

4pin CHIP

PW164B-20TK

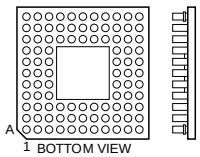

256pin PGA

RCV4-A1T-MASK-25

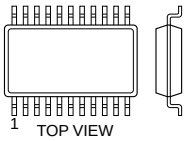

34pin SOP

RS-140-T

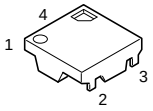

S-80928ANMP-DDR-T2

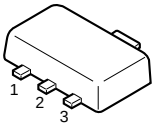

S1S60000
S-93C46AFT-TB
SII161B
UPD64083GF-3BA

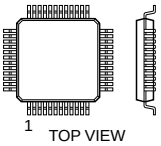

100pin QFP

SAA7118E/V1.518

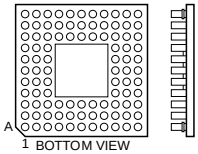

156pin PGA

TA7805S

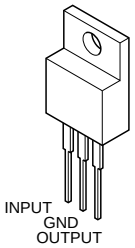

TC7SET08FU(TE85R)

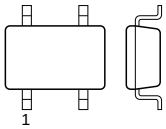

5pin CHIP

TC7SZ125FU(TE85R)

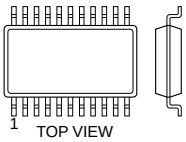

5pin SOP

TK11900MTL

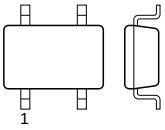

6pin CHIP

2SA1037AK-T146-QR
2SA1037AK-T146-R
2SA1162-G
2SA1162-YG-TE85L
2SA1576A-T106-QR
2SC2712-YG
2SC2712-YG-TE85L
2SC4081-R
2SC4081T106R
2SJ530S-TL
DTA123EUA-T106
DTC123EUA-T106
DTC144EE
DTC144EKA
DTC144EKA-T146
DTC144EUA-T106

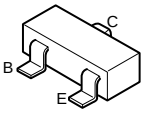

2SA1213Y-TE12L
2SC2873Y-TE12L
2SD1623-S

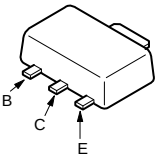

2SK2876-01MR-F119

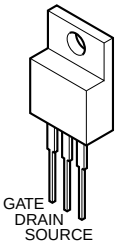

DTA144EE
DTA144EE-TL
DTC144EE-TL

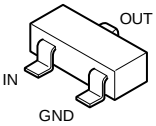

HN1A01FU-TE85R
XP4401

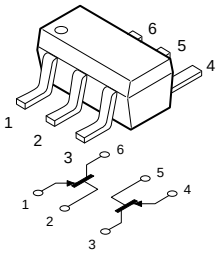

HN1B01FU-TE85R

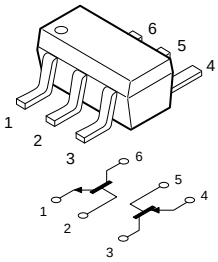

HN1C03FU-TE85R

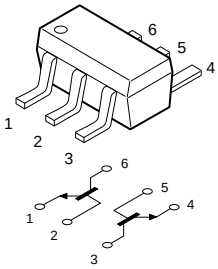

RK3055E-TL

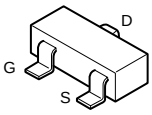

SPW47N60C3

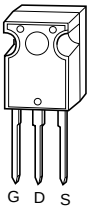

SSM6N15FU(TE85R)

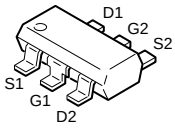

1SS355TE-17
EC31QS03L-TE12L
MA111-(K8).S0
MA111-TX
RD16SB-T1
RD18SB-T1
RD27SB-T1
RD3.3SB2-T1
RD30SB-T1
RD39SB-T1
RD5.6SB-T1
RD9.1SB2
RD9.1SB2-T1

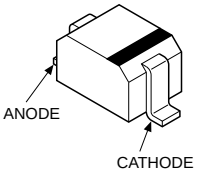

BZA456A

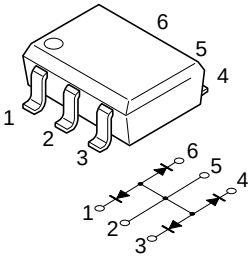

D10SC4M
D10SC6M
D10SC6M(RECTI)

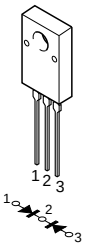

D10XB80

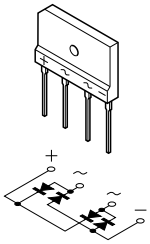

D1F20-TL
D1FS4A-TA
RB501V-40TE17
RB501V-40TE-17

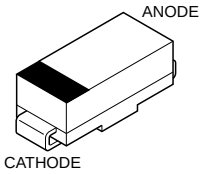

D2FS6-TA

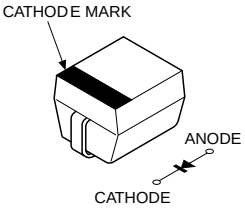

DAN202K
DAN202K-T-146

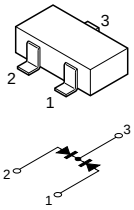

DAN202U
DAN202UT106

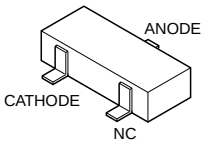

DAP202K(DUAL)
DAP202K-T-146

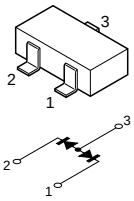

DAP202U
DAP202UT106

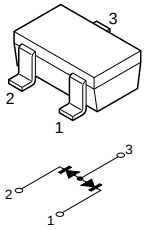

HN1D03FU-TE85L
HN1D03FU-TE85R

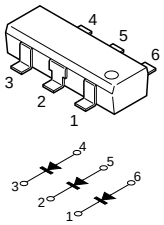

MA3J14700LSO

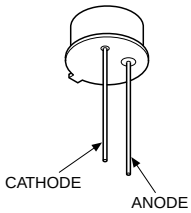

NSCW100

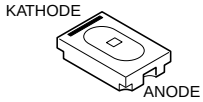

RD3.9SB
RD3.9SB-T1
UF4005PKG23

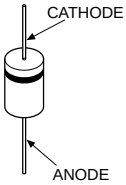

RM11A
RM11C(RECTI)

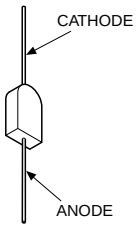

RPM7140

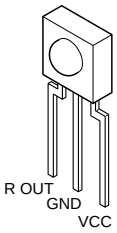

SEC1801C
SEC1901C
SEC2422C

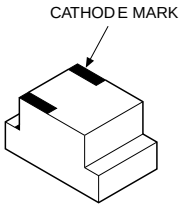

SF20L60U

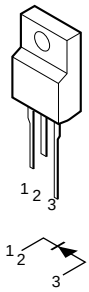

Section 4
Spare Parts

4-1. Notes on Repair Parts

1. Safety Related Components Warning

WARNING

Components marked ⚠ are critical to safe operation. Therefore, specified parts should be used in the case of replacement.

WARNHINWEIS

Les composants identifiés par la marque ⚠ sont critiques pour la sécurité.
Ne les remplacer que par une pièce portant le numéro spécifié.

2. Standardization of Parts

Some repair parts supplied by Sony differ from those used for the unit. These are because of parts commonality and improvement.
Parts List has the present standardized repair parts.

3. Stock of Parts

Parts marked with “o” at SP (Supply Code) column of the Spare Parts list may not be stocked. Therefore, the delivery date will be delayed.
Items with no part number and no description are not stocked because they are seldom required for routine service.

4. Units for Capacitors, Inductors and Resistors

The following units are assumed in Schematic Diagrams, Electrical Parts List and Exploded Views unless otherwise specified.

Capacitors	: μF
Inductors	: μH
Resistors	: Ω

4-2. Exploded Views

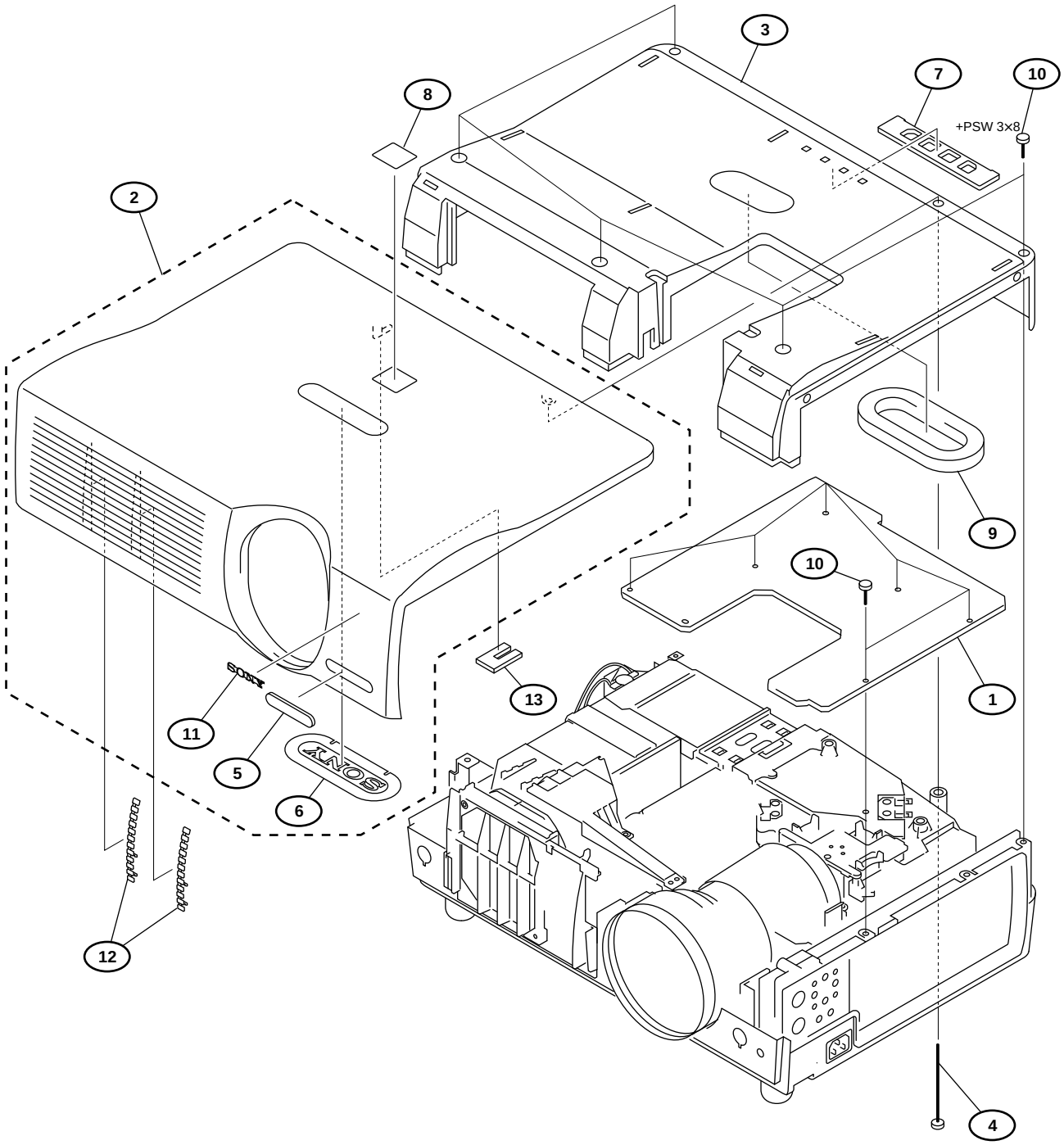

No.	Part No.	SP	Description
1	⚠ A-1302-213-A	s	MOUNTED CIRCUIT BOARD, C(PX35)
	⚠ A-1300-750-B	s	MOUNTED CIRCUIT BOARD, C(PX40)
2	⚠ X-4041-116-2	s	COVER ASSY, TOP
3	⚠ X-4041-118-3	s	HOOD ASSY
4	4-084-424-01	s	SCREW (+PSW M 3X90), SPECIAL
5	4-092-285-01	o	FILTER (FR)
6	4-092-325-01	s	SHEET (SO)
7	4-092-326-01	o	CUSHION (LED)
8	4-095-585-01	o	EMBLEM(PX35)
	4-092-329-01	o	EMBLEM(PX40)
9	4-092-331-01	o	CUSHION (SO)
10	4-382-854-01	s	SCREW +PSW M 3X8
11	4-942-568-71	s	EMBLEM (NO.5), SONY
12	4-092-681-01	s	GUIDE, RIB
13	4-092-980-01	o	PLATE, SHADE (TOP)

Screws/Washers

	7-682-949-09	s	SCREW +PSW 3X10

Side Panel

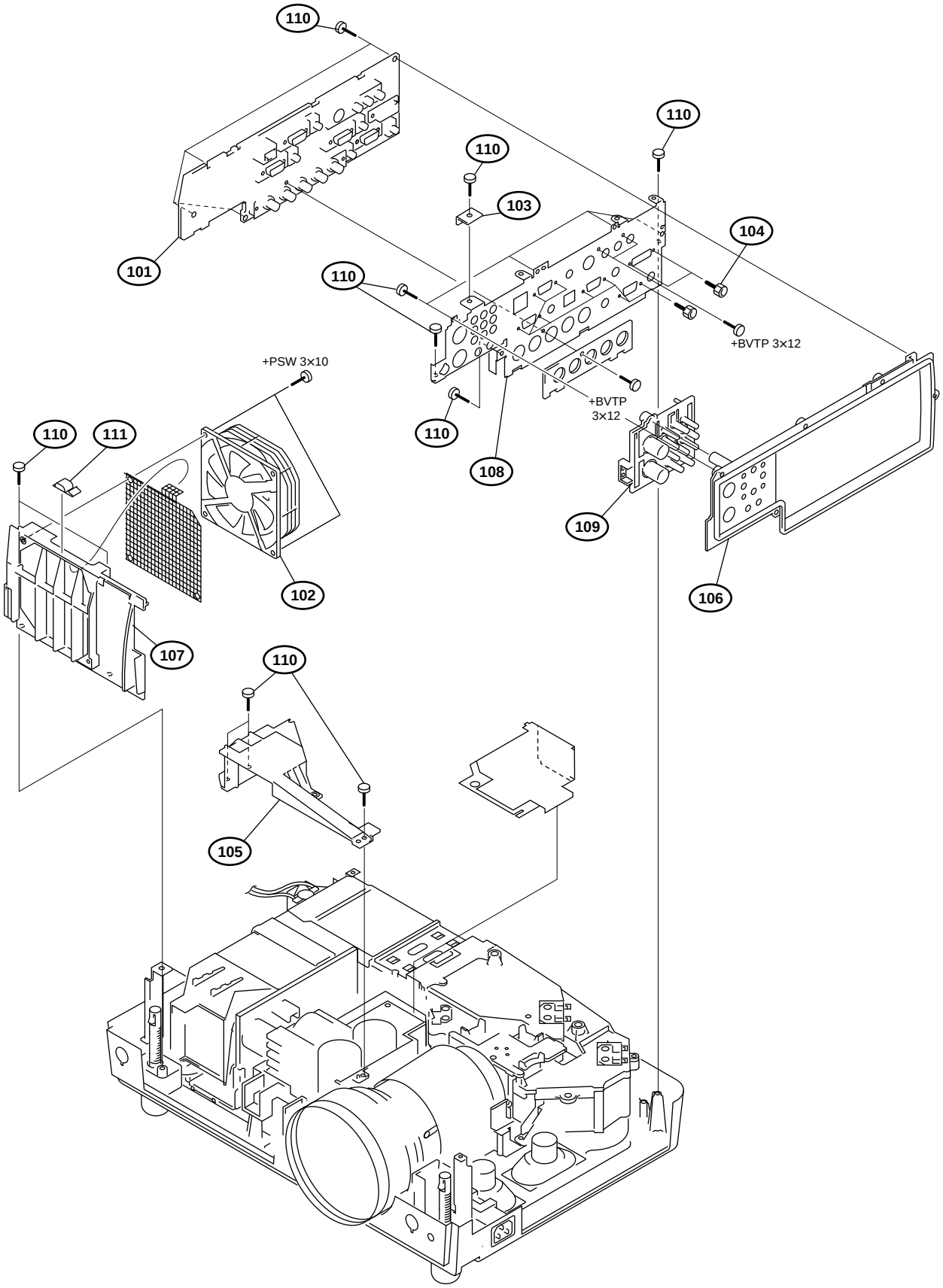
110
110
110
103
104
101
110
+BVTP 3×12
+PSW 3×10
+BVTP
3×12
110
110
111
108
109
102
106
107
110
105

No.	Part No.	SP	Description
101	⚠ A-1300-753-A	s	MOUNTED CIRCUIT BOARD, Q
102	⚠ 1-763-422-11	s	FAN, DC
103	4-092-288-01	o	PLATE (Q)
104	4-092-317-01	s	SCREW (DVI)
105	4-092-380-01	o	BRACKET (GB)
106	4-092-396-01	s	PANEL, SIDE
107	4-092-397-01	o	BRACKET (92)
108	4-092-402-01	s	PANEL, CONNECTOR
109	4-092-404-01	s	BUTTON, KEY
110	4-382-854-01	s	SCREW +PSW M 3X8
111	4-093-253-01	s	SHIELD FINGER (92)

Screws/Washers

	7-682-949-09	s	SCREW +PSW 3X10
	7-685-548-19	s	SCREW +BTB 3X12

Chassis-1

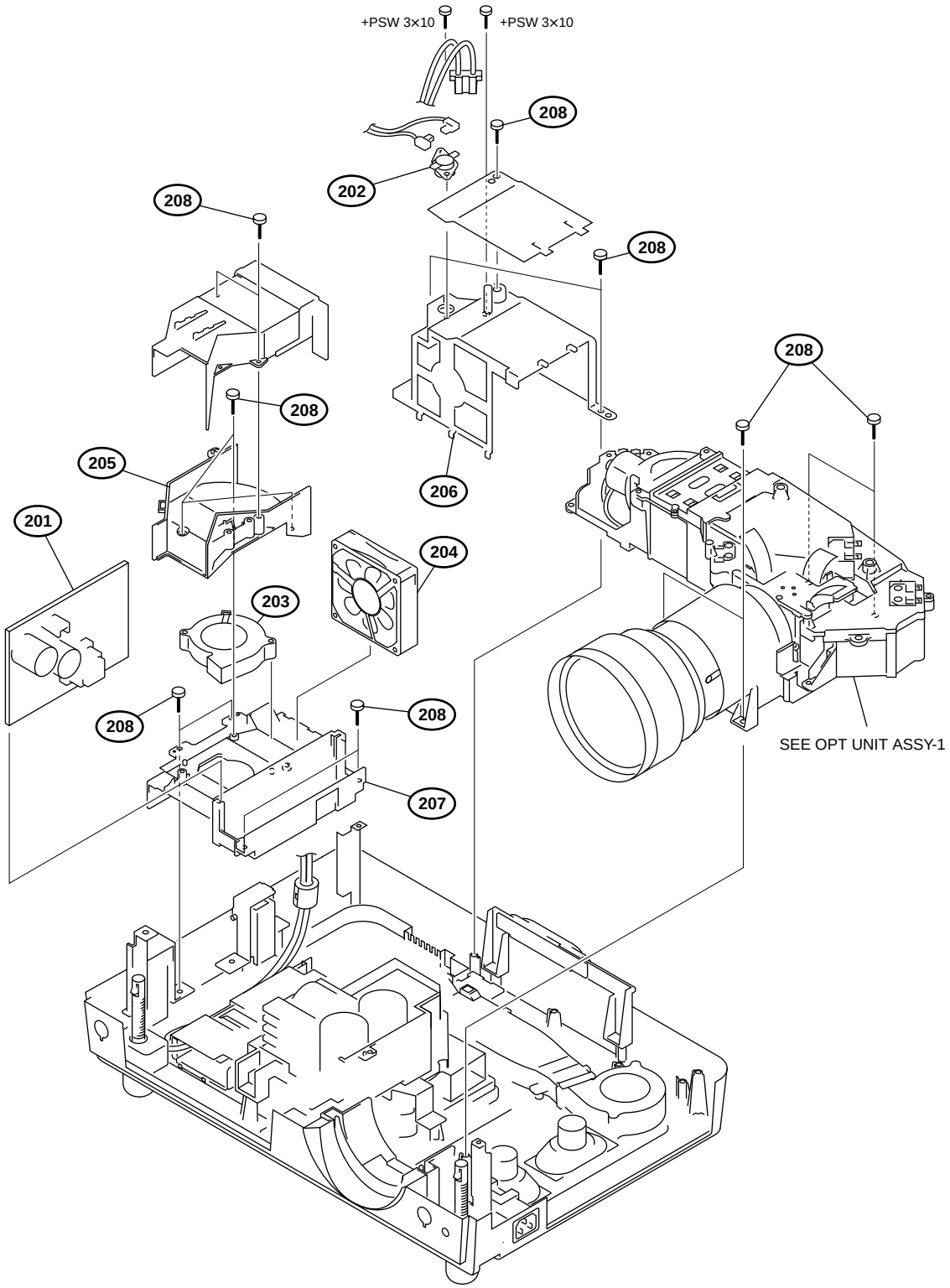
+PSW 3×10
+PSW 3×10
208
202
208
208
208
208
205
206
201
204
203
208
208
207
SEE OPT UNIT ASSY-1

No.	Part No.	SP	Description
201	⚠ A-1300-752-A	s	MOUNTED CIRCUIT BOARD, GB
202	⚠ 1-576-689-11	s	THERMOSTAT
203	⚠ 1-763-757-22	s	FAN
204	⚠ 1-763-951-11	s	FAN, DC
205	4-092-378-01	o	DUCT (BT)
206	4-092-406-01	o	HOUSE, LAMP
207	4-092-408-01	o	BRACKET (BS)
208	4-382-854-01	s	SCREW +PSW M 3X8

Screws/Washers

	7-682-949-09	s	SCREW +PSW 3X10

Chassis-2

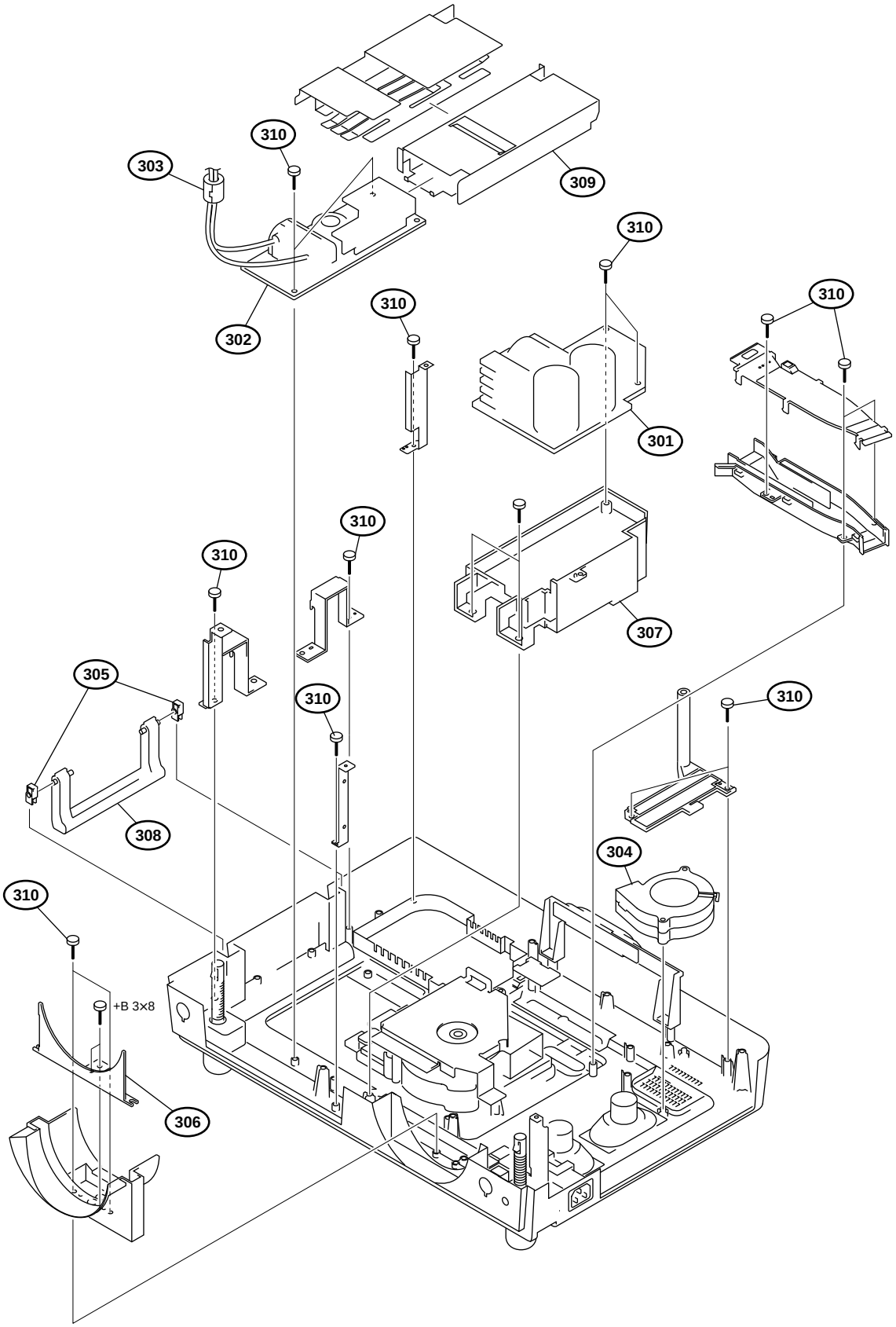
310
303
309
310
302
310
310
301
310
310
307
305
310
310
308
304
310
+B 3×8
306

No.		Part No.	SP	Description
301	⚠	A-1300-751-A	s	MOUNTED CIRCUIT BOARD, GA
302	⚠	1-518-854-11	s	POWER SUPPLY BLOCK 1738
303		1-543-830-11	o	CLAMP, SLEEVE FERRITE
304	⚠	1-763-757-22	s	FAN
305		4-092-289-01	o	BUSHING, HANDLE
306		4-092-352-01	o	GUIDE, RING
307		4-092-374-01	o	BRACKET (G)
308		4-092-387-01	s	HANDLE
309		4-092-405-01	o	SHEET (BS)
310		4-382-854-01	s	SCREW +PSW M 3X8

Screws/Washers

		7-682-548-04	s	SCREW +B 3X8

Chassis-3

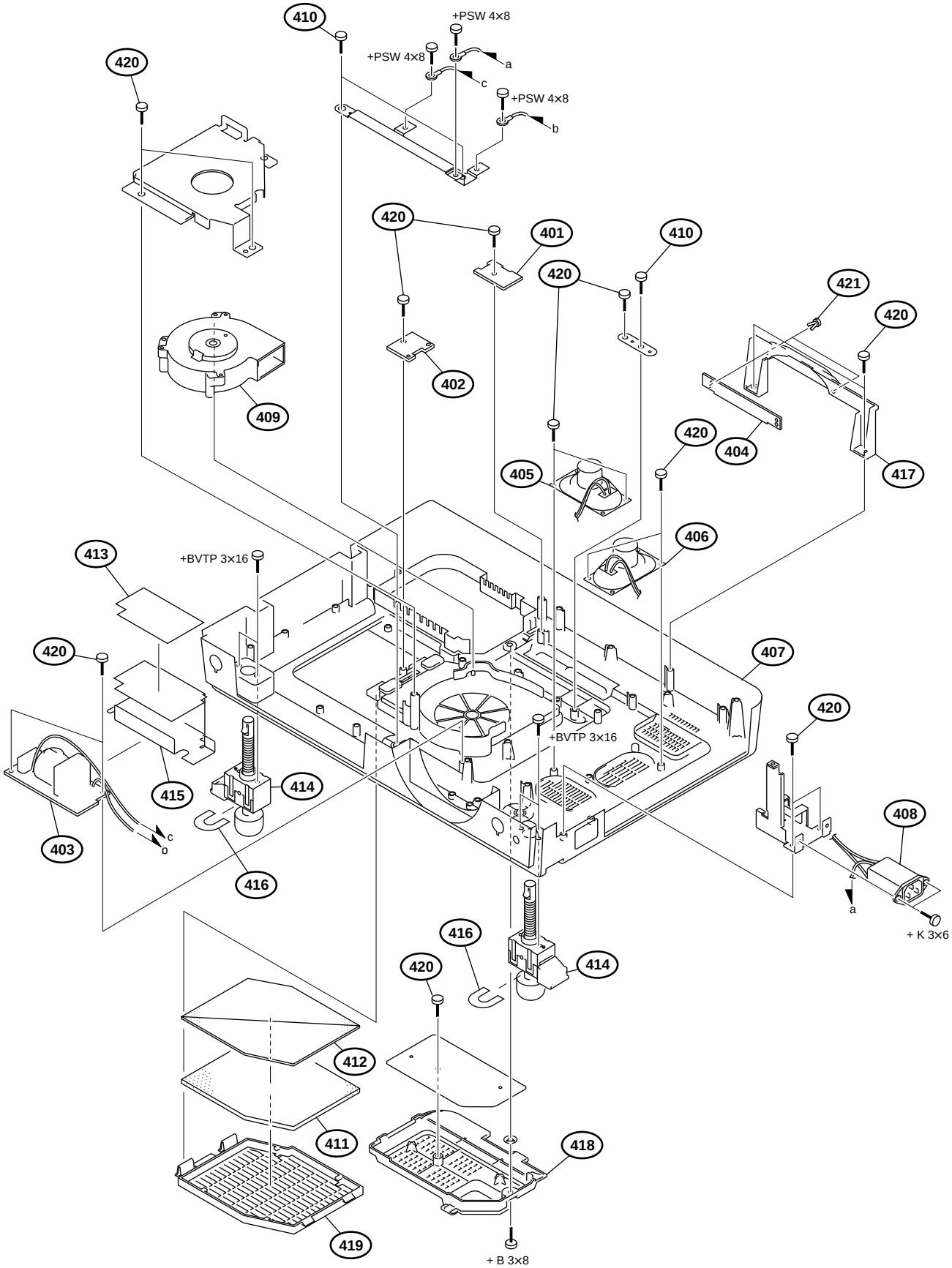
410
+PSW 4×8
+PSW 4×8
a
c
+PSW 4×8
b
420
420
401
410
420
421
420
402
409
420
404
405
417
406
413
+BVTP 3×16
420
407
420
+BVTP 3×16
415
414
408
403
c
b
416
a
+ K 3×6
416
414
420
412
411
418
419
+ B 3×8

No.	Part No.	SP	Description
401	⚠ A-1401-529-A	s	MOUNTED CIRCUIT BOARD, U
402	⚠ A-1401-530-A	s	MOUNTED CIRCUIT BOARD, V
403	⚠ A-1401-531-A	s	MOUNTED CIRCUIT BOARD, F
404	⚠ A-1401-534-A	s	MOUNTED CIRCUIT BOARD, NR
405	⚠ A-1603-717-A	s	SPEAKER ASSY (L)
406	⚠ A-1603-908-A	s	SPEAKER ASSY (R)
407	⚠ X-4041-117-1	s	BASE ASSY
408	⚠ 1-417-334-11	s	INLET
409	⚠ 1-763-952-11	s	FAN, DC
410	3-359-058-01	s	SCREW (+B 5X6)
411	⚠ 4-092-322-01	s	SPACER (F)(T5.0)
412	⚠ 4-092-323-01	s	FILTER (40)(T2.0)
413	4-092-333-01	o	SHEET (GAF)
414	4-092-357-01	s	ADJUSTOR (1738)
415	4-092-358-01	o	SHEET (F)
416	4-092-363-01	s	SPACER (A)
417	4-092-386-01	s	FILTER (RE)
418	⚠ 4-092-389-01	s	DOOR, LAMP
419	⚠ 4-092-401-01	s	COVER, FILTER
420	4-382-854-01	s	SCREW +PSW M 3X8
421	4-812-134-21	s	RIVET,NYLON 3.5

Screws/Washers

	7-682-247-09	s	SCREW +K 3X6
	7-682-548-04	s	SCREW +B 3X8
	7-682-961-01	s	SCREW +PSW 4X8
	7-685-650-79	s	SCREW +BVTP 3X16

OPT UNIT Assy-1

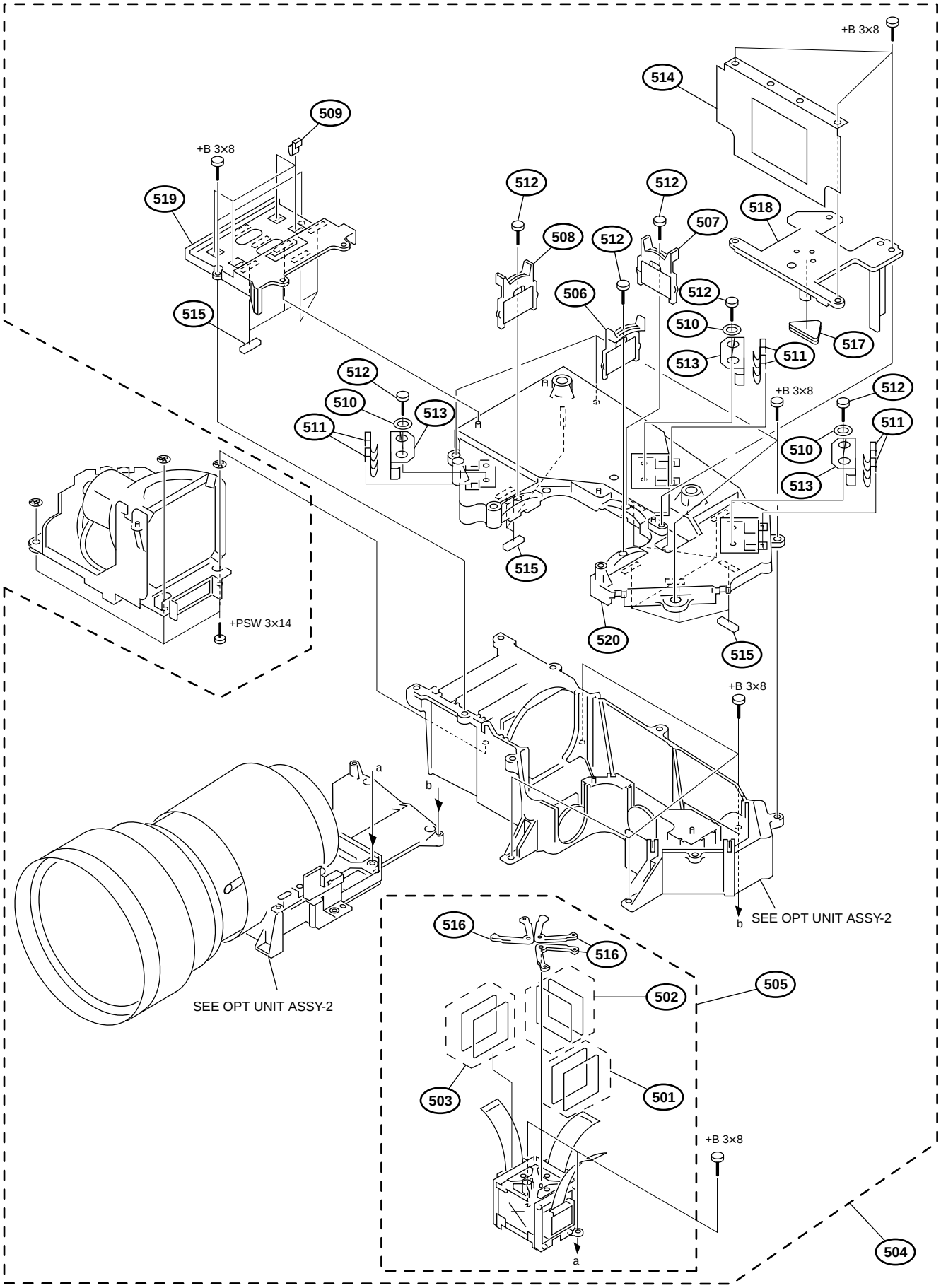

```
No.    Part No.    SP Description
```

```
VPL-PX35
501    A-1604-582-A s OUT-POLARIZER(R)ASSY
502    A-1604-581-A s OUT-POLARIZER(G)ASSY
503    A-1604-228-A s OUT-POLARIZER(B)ASSY
504    A-1604-579-A s OPT UNIT ASSY
505    A-1604-580-A s PRISM BLOCK ASSY
```

```
VPL-PX40
501    A-1604-229-A s OUT-POLARIZER (R) ARB ASSY (LCX046 ARB-2RR)
       A-1604-226-A s OUT-POLARIZER (R) ASB ASSY (LCX046 ASB-2RS)
502    A-1604-230-A s OUT-POLARIZER (G) ARB ASSY (LCX046 ARB-3GR)
       A-1604-227-A s OUT-POLARIZER (G) ASB ASSY (LCX046 ASB-3GS)
503    A-1604-228-A s OUT-POLARIZER (B) ASB ASSY (LCX046 ASB-1BS)
504    A-1604-219-A s OPT UNIT ASSY
505    A-1604-220-A s PRISM BLOCK ASSY
```

Correspondence

∗With regard to 501 and 502, check characters printed on the flexible cable of the panel and attach appropriate one according to the panel.

Combinations are as follows

∗Combinations, A and B, are available for the LCD panel and the out-polarizer.

∗Attach the out-polarizer (the assembly part) that fits to the LCD panel.

∗Attach the panel and the out-polarizer so that the marking (upper view) comes as shown.

	No.	LCD PANEL		OUT-POLARIZER	
A	501	8-753-033-01	LCX046ARB-2	A-1604-229-A	OUT-POLARIZER (R) ARB ASSY
	502	8-753-033-08	LCX046ASB-3	A-1604-227-A	OUT-POLARIZER (G) ASB ASSY
	503	8-753-033-00	LCX046ARB-1	A-1604-228-A	OUT-POLARIZER (B) ASSY
B	501	8-753-033-07	LCX046ASB-2	A-1604-226-A	OUT-POLARIZER (R) ASB ASSY
	502	8-753-033-02	LCX046ARB-3	A-1604-230-A	OUT-POLARIZER (G) ARB ASSY
	503	8-753-033-06	LCX046ASB-1	A-1604-228-A	OUT-POLARIZER (B) ASSY

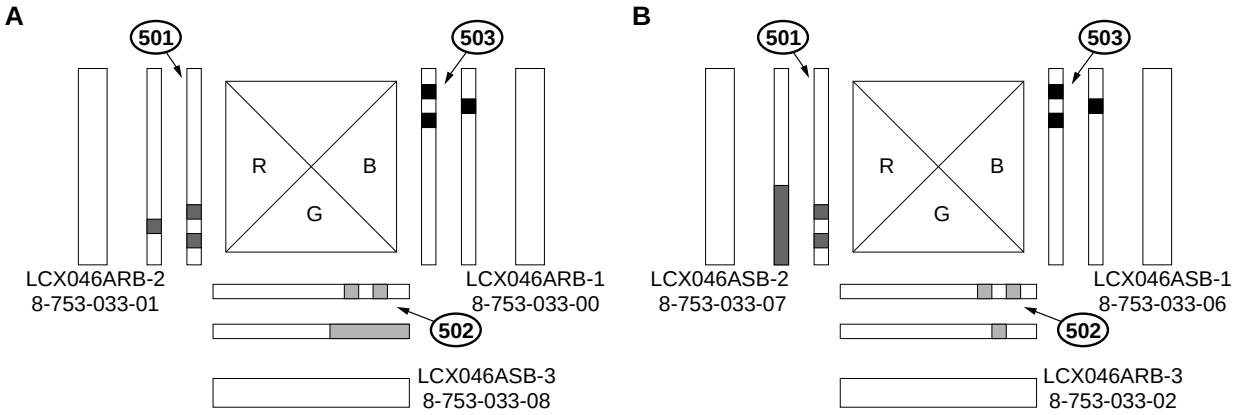


```
506    A-1604-223-A s IN-POLARIZER (R) ASSY
507    A-1604-224-A s IN-POLARIZER (G) ASSY
508    A-1604-225-A s IN-POLARIZER (B) ASSY
509    4-066-172-01 o FASTENER (OPT), MIRROR
510    4-066-174-01 s STOPPER (OPT), ROTATION

511    4-074-405-01 o FASTENER (RB)
512    4-074-474-01 s +BSW M 3X8
513    4-082-749-01 o ADJUSTER, RB-MIRROR
514    4-092-306-01 o SHADE PLATE
515    4-092-307-01 o CUSHION

516    4-092-310-01 o RETAINER, POLAIZER
517    4-092-316-01 o SPACER
518    4-092-392-01 o RETAINER, PRISM
519    4-092-393-01 o COVER (B), UNIT
520    4-092-400-01 o COVER (F), UNIT


Screws/Washers

       7-682-548-04 s SCREW +B 3X8
       7-682-951-01 s SCREW +PSW 3X14
```

OPT UNIT Assy-2

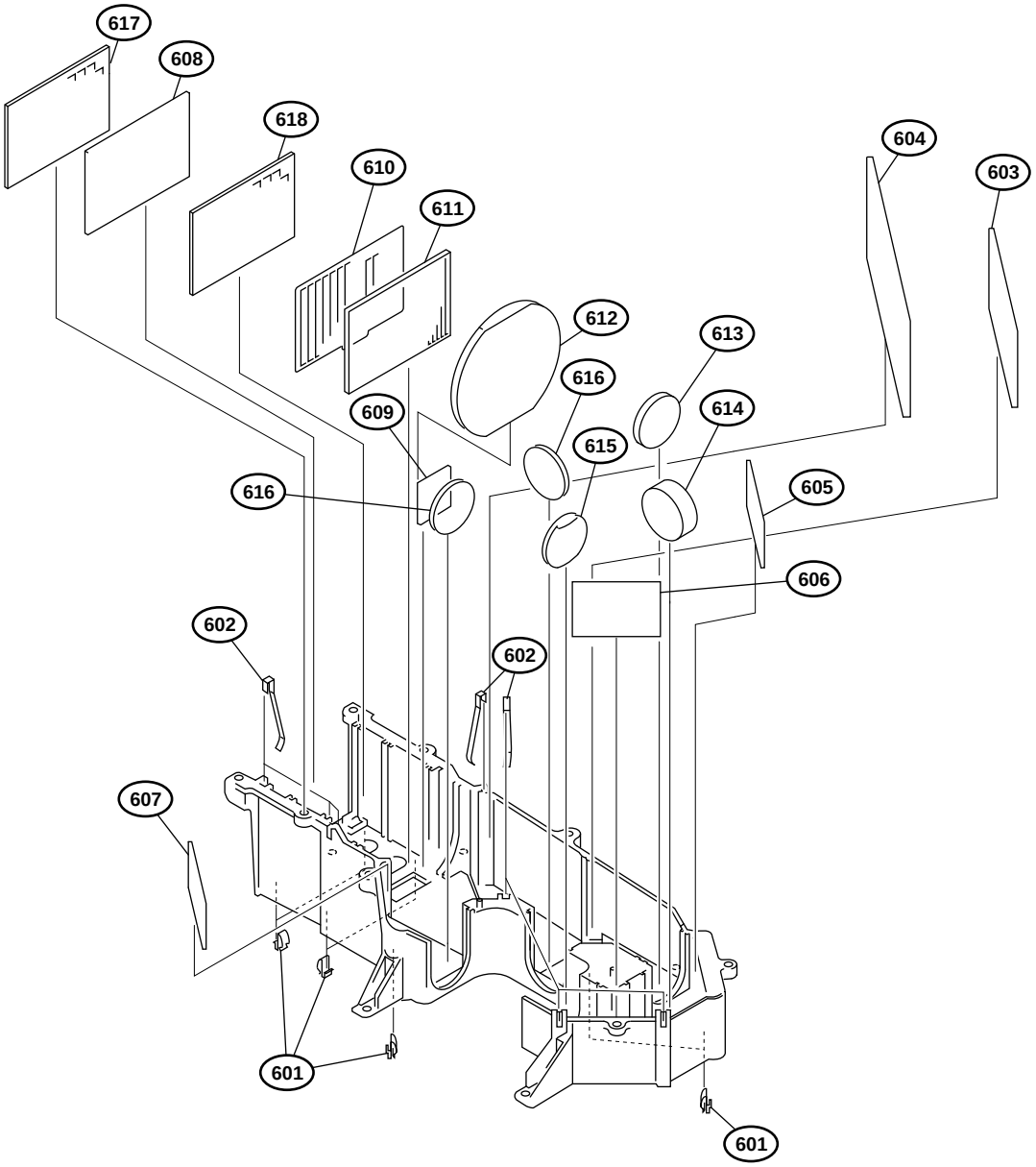

No.	Part No.	SP	Description
601	4-066-172-01	o	FASTENER (OPT), MIRROR
602	4-082-745-01	o	SPRING (FY)
603	4-092-290-01	o	DICHROIC MIRROR, G-REFRECT
604	4-092-291-01	o	DICFROIC MIRROR, B-REFRECT
605	4-092-292-01	o	MIRROR, R-CHANNEL-1
606	4-092-293-01	o	MIRROR, R-CHANNEL-2
607	4-092-294-01	o	MIRROR, B-CHANNEL
608	4-092-295-01	o	PRE-FILTER, UV CUT
609	4-092-296-01	o	FILTER, UV-CUT
610	4-092-312-01	o	APERTURE, PS CON (PX40)
	4-096-380-01	o	APERTURE(35)(PX35)
611	A-1604-222-A	s	PS ASSY
612	4-092-409-01	o	LENS, MAIN CONDENSER
613	4-092-410-01	o	LENS, RELAY-1
614	4-092-411-01	o	LENS, RELAY-2
615	4-092-412-01	o	LENS, R-CH CONDENSER
616	4-092-413-01	o	LENS, GB-CH CONDENSER
617	4-092-414-01	o	FLY EYE, LENS-1
618	4-092-415-01	o	FLY EYE, LENS-2

OPT UNIT Assy-3

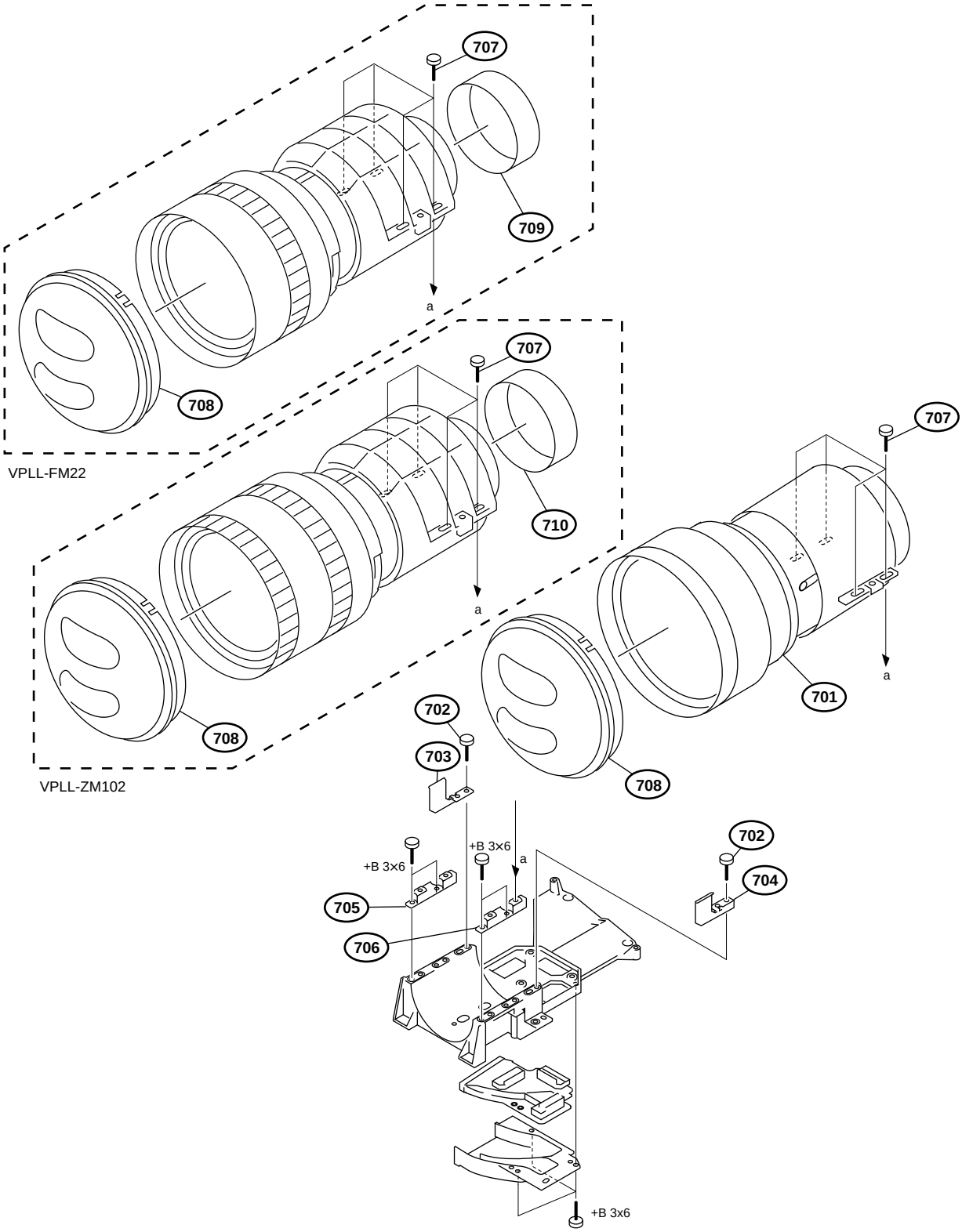

No.	Part No.	SP	Description
701	A-1604-221-A	s	PROJECTION LENS
702	3-899-249-11	s	BOLT, HEXAGON SOCKET
703	4-092-308-01	o	PLATE (L), LENS
704	4-092-315-01	o	PLATE (R), LENS
705	4-092-354-01	o	OFFSET PLATE (L), LENS
706	4-092-355-01	o	OFFSET PLATE (R), LENS
707	4-382-854-11	s	SCREW,+PSW M 3X10
708	9-885-029-37	s	FRONT LENS CAP (PX40)
709	9-885-029-38	s	REAR LENS CAP (VPLL-FM22)
710	9-885-029-39	s	REAR LENS CAP (VPLL-ZM102)

Screws/Washers

	7-682-547-09	s	SCREW +B 3X6

4-3. Electrical Parts List

C BOARD
---

note

∗1 : If IC352, IC550, IC601, IC651 and IC702 become defective, replace the entire C board.

Ref. No. or Q'ty	Part No.	SP	Description
1pc	⚠ A-1300-750-B	s	MOUNTED CIRCUIT BOARD, C (VPL-PX40)
1pc	⚠ A-1302-213-A	s	MOUNTED CIRCUIT BOARD, C (VPL-PX35)
C51	1-125-777-11	s	CAPACITOR CERAMIC 0.1MF/10V
C53	1-164-156-11	s	CAPACITOR,CERAMIC 0.1MF/25V F
C54	1-164-156-11	s	CAPACITOR,CERAMIC 0.1MF/25V F
C55	1-125-777-11	s	CAPACITOR CERAMIC 0.1MF/10V
C102	1-164-943-11	s	CAPACITOR,CHIP CERAMIC 0.01MF
C103	1-107-820-11	s	CAPACITOR,CHIP CERAMIC 0.1MF F
C105	1-107-820-11	s	CAPACITOR,CHIP CERAMIC 0.1MF F
C106	1-164-937-11	s	CAPACITOR,CHIP CERAMIC 1000PF
C107	1-164-937-11	s	CAPACITOR,CHIP CERAMIC 1000PF
C108	1-164-937-11	s	CAPACITOR,CHIP CERAMIC 1000PF
C109	1-164-937-11	s	CAPACITOR,CHIP CERAMIC 1000PF
C110	1-115-566-11	s	CAPACITOR,CERAMIC 4.7MF B/6.3V
C111	1-107-820-11	s	CAPACITOR,CHIP CERAMIC 0.1MF F
C112	1-127-772-11	s	CAPACITOR C,CERAMIC 33000PF B
C113	1-107-820-11	s	CAPACITOR,CHIP CERAMIC 0.1MF F
C114	1-107-820-11	s	CAPACITOR,CHIP CERAMIC 0.1MF F
C115	1-164-852-11	s	CAPACITOR,CHIP CERAMIC 12PF/16
C116	1-164-852-11	s	CAPACITOR,CHIP CERAMIC 12PF/16
C117	1-164-943-11	s	CAPACITOR,CHIP CERAMIC 0.01MF
C118	1-107-820-11	s	CAPACITOR,CHIP CERAMIC 0.1MF F
C119	1-107-820-11	s	CAPACITOR,CHIP CERAMIC 0.1MF F
C120	1-107-820-11	s	CAPACITOR,CHIP CERAMIC 0.1MF F
C121	1-115-156-11	s	CAPACITOR,CERAMIC 1MF/10V(1608
C122	1-107-820-11	s	CAPACITOR,CHIP CERAMIC 0.1MF F
C124	1-107-820-11	s	CAPACITOR,CHIP CERAMIC 0.1MF F
C125	1-164-935-11	s	CAPACITOR,CHIP CERAMIC 470PF
C126	1-164-935-11	s	CAPACITOR,CHIP CERAMIC 470PF
C127	1-107-820-11	s	CAPACITOR,CHIP CERAMIC 0.1MF F
C129	1-107-820-11	s	CAPACITOR,CHIP CERAMIC 0.1MF F
C156	1-164-874-11	s	CAPACITOR,CHIP CERAMIC 100PF
C157	1-164-874-11	s	CAPACITOR,CHIP CERAMIC 100PF
C158	1-125-777-11	s	CAPACITOR CERAMIC 0.1MF/10V
C159	1-115-156-11	s	CAPACITOR,CERAMIC 1MF/10V(1608
C160	1-164-943-11	s	CAPACITOR,CHIP CERAMIC 0.01MF
C165	1-115-339-11	s	CAPACITOR,CERAMIC 0.1MF/50V
C201	1-107-820-11	s	CAPACITOR,CHIP CERAMIC 0.1MF F
C202	1-126-395-11	s	CAPACITOR,ELECT 22MF/16V(CHIP)
C203	1-107-820-11	s	CAPACITOR,CHIP CERAMIC 0.1MF F
C204	1-107-820-11	s	CAPACITOR,CHIP CERAMIC 0.1MF F
C205	1-117-681-11	s	CAPACITOR, ELECT 100MF/16V
C206	1-117-681-11	s	CAPACITOR, ELECT 100MF/16V
C207	1-128-992-11	s	CAPACITOR ELECT 47MF 25V
C208	1-117-681-11	s	CAPACITOR, ELECT 100MF/16V
C209	1-135-347-11	s	CAP, SOLID ELECT 82MF
C210	1-115-339-11	s	CAPACITOR,CERAMIC 0.1MF/50V
C211	1-117-681-11	s	CAPACITOR, ELECT 100MF/16V
C212	1-135-347-11	s	CAP, SOLID ELECT 82MF
C213	1-107-820-11	s	CAPACITOR,CHIP CERAMIC 0.1MF F
C214	1-125-777-11	s	CAPACITOR CERAMIC 0.1MF/10V
C215	1-125-777-11	s	CAPACITOR CERAMIC 0.1MF/10V
C216	1-164-156-11	s	CAPACITOR,CERAMIC 0.1MF/25V F

(C BOARD)

Ref. No. or Q'ty	Part No.	SP	Description
C217	1-126-395-11	s	CAPACITOR,ELECT 22MF/16V(CHIP)
C218	1-125-837-11	s	CAPACITOR,CHIP CERAMIC1MF/6.3V
C219	1-107-820-11	s	CAPACITOR,CHIP CERAMIC 0.1MF F
C220	1-117-681-11	s	CAPACITOR, ELECT 100MF/16V
C221	1-128-394-11	s	CAPACITOR,ELECT 220MF/10V
C222	1-128-992-11	s	CAPACITOR ELECT 47MF 25V
C223	1-107-820-11	s	CAPACITOR,CHIP CERAMIC 0.1MF F
C224	1-128-992-11	s	CAPACITOR ELECT 47MF 25V
C225	1-164-943-11	s	CAPACITOR,CHIP CERAMIC 0.01MF
C226	1-117-681-11	s	CAPACITOR, ELECT 100MF/16V
C227	1-117-681-11	s	CAPACITOR, ELECT 100MF/16V
C228	1-126-395-11	s	CAPACITOR,ELECT 22MF/16V(CHIP)
C229	1-107-820-11	s	CAPACITOR,CHIP CERAMIC 0.1MF F
C230	1-117-681-11	s	CAPACITOR, ELECT 100MF/16V
C231	1-117-681-11	s	CAPACITOR, ELECT 100MF/16V
C232	1-107-820-11	s	CAPACITOR,CHIP CERAMIC 0.1MF F
C233	1-125-777-11	s	CAPACITOR CERAMIC 0.1MF/10V
C234	1-117-681-11	s	CAPACITOR, ELECT 100MF/16V
C235	1-128-394-11	s	CAPACITOR,ELECT 220MF/10V
C236	1-117-681-11	s	CAPACITOR, ELECT 100MF/16V
C237	1-125-777-11	s	CAPACITOR CERAMIC 0.1MF/10V
C238	1-126-205-11	s	CAPACITOR,ELECT 47M/6.3
C239	1-107-820-11	s	CAPACITOR,CHIP CERAMIC 0.1MF F
C240	1-126-395-11	s	CAPACITOR,ELECT 22MF/16V(CHIP)
C241	1-117-681-11	s	CAPACITOR, ELECT 100MF/16V
C242	1-117-681-11	s	CAPACITOR, ELECT 100MF/16V
C243	1-107-820-11	s	CAPACITOR,CHIP CERAMIC 0.1MF F
C244	1-164-943-11	s	CAPACITOR,CHIP CERAMIC 0.01MF
C245	1-125-777-11	s	CAPACITOR CERAMIC 0.1MF/10V
C246	1-125-777-11	s	CAPACITOR CERAMIC 0.1MF/10V
C247	1-126-205-11	s	CAPACITOR,ELECT 47M/6.3
C248	1-125-777-11	s	CAPACITOR CERAMIC 0.1MF/10V
C249	1-165-870-21	s	CAPACITOR, ELECT 100MF(6.3X6)
C252	1-125-777-11	s	CAPACITOR CERAMIC 0.1MF/10V
C253	1-115-339-11	s	CAPACITOR,CERAMIC 0.1MF/50V
C254	1-125-777-11	s	CAPACITOR CERAMIC 0.1MF/10V
C255	1-126-205-11	s	CAPACITOR,ELECT 47M/6.3
C301	1-125-777-11	s	CAPACITOR CERAMIC 0.1MF/10V
C302	1-164-392-11	s	CAPACITOR CERAMIC 390PF/50V CH
C303	1-164-852-11	s	CAPACITOR,CHIP CERAMIC 12PF/16
C304	1-164-852-11	s	CAPACITOR,CHIP CERAMIC 12PF/16
C305	1-164-852-11	s	CAPACITOR,CHIP CERAMIC 12PF/16
C306	1-164-852-11	s	CAPACITOR,CHIP CERAMIC 12PF/16
C307	1-164-939-11	s	CAPACITOR,CHIP CERAMIC 2200PF
C308	1-125-777-11	s	CAPACITOR CERAMIC 0.1MF/10V
C309	1-107-820-11	s	CAPACITOR,CHIP CERAMIC 0.1MF F
C310	1-125-777-11	s	CAPACITOR CERAMIC 0.1MF/10V
C311	1-107-820-11	s	CAPACITOR,CHIP CERAMIC 0.1MF F
C312	1-107-820-11	s	CAPACITOR,CHIP CERAMIC 0.1MF F
C313	1-125-837-11	s	CAPACITOR,CHIP CERAMIC1MF/6.3V
C314	1-107-820-11	s	CAPACITOR,CHIP CERAMIC 0.1MF F
C315	1-107-820-11	s	CAPACITOR,CHIP CERAMIC 0.1MF F
C316	1-107-820-11	s	CAPACITOR,CHIP CERAMIC 0.1MF F
C317	1-107-820-11	s	CAPACITOR,CHIP CERAMIC 0.1MF F
C318	1-164-939-11	s	CAPACITOR,CHIP CERAMIC 2200PF
C319	1-125-777-11	s	CAPACITOR CERAMIC 0.1MF/10V
C320	1-125-777-11	s	CAPACITOR CERAMIC 0.1MF/10V
C321	1-125-777-11	s	CAPACITOR CERAMIC 0.1MF/10V
C322	1-125-777-11	s	CAPACITOR CERAMIC 0.1MF/10V

(C BOARD)

Ref. No. or Q'ty	Part No.	SP	Description
C323	1-125-777-11	s	CAPACITOR CERAMIC 0.1MF/10V
C324	1-126-205-11	s	CAPACITOR,ELECT 47M/6.3
C325	1-125-777-11	s	CAPACITOR CERAMIC 0.1MF/10V
C326	1-125-777-11	s	CAPACITOR CERAMIC 0.1MF/10V
C327	1-128-391-11	s	CAPACITOR,ELECT 330MF/6.3V
C328	1-107-820-11	s	CAPACITOR,CHIP CERAMIC 0.1MF F
C329	1-117-681-11	s	CAPACITOR, ELECT 100MF/16V
C331	1-164-860-11	s	CAPACITOR,CHIP CERAMIC 27PF/16
C332	1-164-854-11	s	CAPACITOR CERAMIC 15PF/16V CH
C333	1-164-854-11	s	CAPACITOR CERAMIC 15PF/16V CH
C334	1-128-004-11	s	CAPACITOR ELECT 10MF/16V(CHIP)
C335	1-164-315-11	s	CAPACITOR,CERAMIC 470PF/50V CH
C337	1-107-820-11	s	CAPACITOR,CHIP CERAMIC 0.1MF F
C338	1-117-681-11	s	CAPACITOR, ELECT 100MF/16V
C339	1-125-777-11	s	CAPACITOR CERAMIC 0.1MF/10V
C340	1-126-205-11	s	CAPACITOR,ELECT 47M/6.3
C342	1-164-854-11	s	CAPACITOR CERAMIC 15PF/16V CH
C343	1-128-004-11	s	CAPACITOR ELECT 10MF/16V(CHIP)
C344	1-125-837-11	s	CAPACITOR,CHIP CERAMIC1MF/6.3V
C345	1-164-854-11	s	CAPACITOR CERAMIC 15PF/16V CH
C346	1-164-156-11	s	CAPACITOR,CERAMIC 0.1MF/25V F
C347	1-128-394-11	s	CAPACITOR,ELECT 220MF/10V
C348	1-128-004-11	s	CAPACITOR ELECT 10MF/16V(CHIP)
C349	1-125-777-11	s	CAPACITOR CERAMIC 0.1MF/10V
C350	1-117-681-11	s	CAPACITOR, ELECT 100MF/16V
C351	1-164-854-11	s	CAPACITOR CERAMIC 15PF/16V CH
C352	1-164-854-11	s	CAPACITOR CERAMIC 15PF/16V CH
C355	1-127-772-11	s	CAPACITOR C,CERAMIC 33000PF B
C357	1-127-772-11	s	CAPACITOR C,CERAMIC 33000PF B
C358	1-127-772-11	s	CAPACITOR C,CERAMIC 33000PF B
C359	1-119-923-11	s	CAPACITOR,CHIP CERAMIC 0.047MF
C360	1-119-923-11	s	CAPACITOR,CHIP CERAMIC 0.047MF
C361	1-127-772-11	s	CAPACITOR C,CERAMIC 33000PF B
C362	1-119-923-11	s	CAPACITOR,CHIP CERAMIC 0.047MF
C364	1-127-772-11	s	CAPACITOR C,CERAMIC 33000PF B
C365	1-127-772-11	s	CAPACITOR C,CERAMIC 33000PF B
C366	1-127-772-11	s	CAPACITOR C,CERAMIC 33000PF B
C367	1-127-772-11	s	CAPACITOR C,CERAMIC 33000PF B
C368	1-127-772-11	s	CAPACITOR C,CERAMIC 33000PF B
C369	1-119-923-11	s	CAPACITOR,CHIP CERAMIC 0.047MF
C370	1-128-391-11	s	CAPACITOR,ELECT 330MF/6.3V
C371	1-128-391-11	s	CAPACITOR,ELECT 330MF/6.3V
C372	1-107-820-11	s	CAPACITOR,CHIP CERAMIC 0.1MF F
C373	1-107-820-11	s	CAPACITOR,CHIP CERAMIC 0.1MF F
C374	1-107-820-11	s	CAPACITOR,CHIP CERAMIC 0.1MF F
C375	1-107-820-11	s	CAPACITOR,CHIP CERAMIC 0.1MF F
C376	1-164-943-11	s	CAPACITOR,CHIP CERAMIC 0.01MF
C377	1-164-943-11	s	CAPACITOR,CHIP CERAMIC 0.01MF
C378	1-164-943-11	s	CAPACITOR,CHIP CERAMIC 0.01MF
C379	1-164-943-11	s	CAPACITOR,CHIP CERAMIC 0.01MF
C380	1-126-205-11	s	CAPACITOR,ELECT 47M/6.3
C381	1-125-777-11	s	CAPACITOR CERAMIC 0.1MF/10V
C382	1-124-778-00	s	CAPACITOR,ELECT 22MF/6.3V
C383	1-107-820-11	s	CAPACITOR,CHIP CERAMIC 0.1MF F
C384	1-124-778-00	s	CAPACITOR,ELECT 22MF/6.3V
C385	1-124-778-00	s	CAPACITOR,ELECT 22MF/6.3V
C386	1-164-943-11	s	CAPACITOR,CHIP CERAMIC 0.01MF
C387	1-125-777-11	s	CAPACITOR CERAMIC 0.1MF/10V
C388	1-125-837-11	s	CAPACITOR,CHIP CERAMIC1MF/6.3V

(C BOARD)

Ref. No. or Q'ty	Part No.	SP	Description
C389	1-125-837-11	s	CAPACITOR,CHIP CERAMIC1MF/6.3V
C390	1-117-681-11	s	CAPACITOR, ELECT 100MF/16V
C391	1-117-681-11	s	CAPACITOR, ELECT 100MF/16V
C392	1-128-391-11	s	CAPACITOR,ELECT 330MF/6.3V
C393	1-128-391-11	s	CAPACITOR,ELECT 330MF/6.3V
C394	1-126-205-11	s	CAPACITOR,ELECT 47M/6.3
C395	1-107-820-11	s	CAPACITOR,CHIP CERAMIC 0.1MF F
C400	1-125-777-11	s	CAPACITOR CERAMIC 0.1MF/10V
C401	1-164-868-11	s	CAPACITOR,CHIP CERAMIC 56PF
C402	1-125-777-11	s	CAPACITOR CERAMIC 0.1MF/10V
C403	1-125-777-11	s	CAPACITOR CERAMIC 0.1MF/10V
C404	1-126-395-11	s	CAPACITOR,ELECT 22MF/16V(CHIP)
C405	1-164-156-11	s	CAPACITOR,CERAMIC 0.1MF/25V F
C406	1-128-004-11	s	CAPACITOR ELECT 10MF/16V(CHIP)
C407	1-125-777-11	s	CAPACITOR CERAMIC 0.1MF/10V
C408	1-164-156-11	s	CAPACITOR,CERAMIC 0.1MF/25V F
C409	1-126-395-11	s	CAPACITOR,ELECT 22MF/16V(CHIP)
C410	1-128-004-11	s	CAPACITOR ELECT 10MF/16V(CHIP)
C411	1-126-395-11	s	CAPACITOR,ELECT 22MF/16V(CHIP)
C413	1-125-777-11	s	CAPACITOR CERAMIC 0.1MF/10V
C414	1-125-777-11	s	CAPACITOR CERAMIC 0.1MF/10V
C416	1-128-004-11	s	CAPACITOR ELECT 10MF/16V(CHIP)
C417	1-128-004-11	s	CAPACITOR ELECT 10MF/16V(CHIP)
C418	1-164-156-11	s	CAPACITOR,CERAMIC 0.1MF/25V F
C419	1-125-777-11	s	CAPACITOR CERAMIC 0.1MF/10V
C420	1-125-777-11	s	CAPACITOR CERAMIC 0.1MF/10V
C421	1-128-004-11	s	CAPACITOR ELECT 10MF/16V(CHIP)
C422	1-125-777-11	s	CAPACITOR CERAMIC 0.1MF/10V
C423	1-125-837-11	s	CAPACITOR,CHIP CERAMIC1MF/6.3V
C424	1-164-937-11	s	CAPACITOR,CHIP CERAMIC 1000PF
C425	1-125-777-11	s	CAPACITOR CERAMIC 0.1MF/10V
C426	1-137-987-81	s	CAPACITOR,C.CERAMIC 0.068MF
C427	1-115-566-11	s	CAPACITOR,CERAMIC 4.7MF B/6.3V
C428	1-115-566-11	s	CAPACITOR,CERAMIC 4.7MF B/6.3V
C429	1-165-875-11	s	CAPACITOR, CHIP CERAMIC 10MF B
C430	1-164-874-11	s	CAPACITOR,CHIP CERAMIC 100PF
C431	1-125-777-11	s	CAPACITOR CERAMIC 0.1MF/10V
C432	1-165-875-11	s	CAPACITOR, CHIP CERAMIC 10MF B
C433	1-164-943-11	s	CAPACITOR,CHIP CERAMIC 0.01MF
C434	1-164-882-11	s	CAPACITOR,CERAMIC 220PF/16V CH
C435	1-125-837-11	s	CAPACITOR,CHIP CERAMIC1MF/6.3V
C436	1-164-874-11	s	CAPACITOR,CHIP CERAMIC 100PF
C437	1-125-777-11	s	CAPACITOR CERAMIC 0.1MF/10V
C438	1-125-889-11	s	CAPACITOR, C.CERAMIC 2.2MF
C439	1-164-874-11	s	CAPACITOR,CHIP CERAMIC 100PF
C440	1-164-866-11	s	CAPACITOR,CHIP CERAMIC 47PF/16
C452	1-164-937-11	s	CAPACITOR,CHIP CERAMIC 1000PF
C453	1-119-923-11	s	CAPACITOR,CHIP CERAMIC 0.047MF
C454	1-119-923-11	s	CAPACITOR,CHIP CERAMIC 0.047MF
C456	1-119-923-11	s	CAPACITOR,CHIP CERAMIC 0.047MF
C459	1-125-777-11	s	CAPACITOR CERAMIC 0.1MF/10V
C460	1-125-777-11	s	CAPACITOR CERAMIC 0.1MF/10V
C461	1-125-777-11	s	CAPACITOR CERAMIC 0.1MF/10V
C462	1-125-777-11	s	CAPACITOR CERAMIC 0.1MF/10V
C463	1-125-777-11	s	CAPACITOR CERAMIC 0.1MF/10V
C464	1-125-777-11	s	CAPACITOR CERAMIC 0.1MF/10V
C465	1-124-778-00	s	CAPACITOR,ELECT 22MF/6.3V
C466	1-125-777-11	s	CAPACITOR CERAMIC 0.1MF/10V
C467	1-125-777-11	s	CAPACITOR CERAMIC 0.1MF/10V

(C BOARD)

Ref. No. or Q'ty	Part No.	SP	Description
C468	1-125-777-11	s	CAPACITOR CERAMIC 0.1MF/10V
C469	1-135-995-91	s	CAP,CHIP CERAMIC39000PF B 1608
C470	1-117-446-11	s	CAPACITOR CERAMIC 3900PF 16V
C471	1-125-777-11	s	CAPACITOR CERAMIC 0.1MF/10V
C472	1-125-837-11	s	CAPACITOR,CHIP CERAMIC1MF/6.3V
C473	1-164-943-11	s	CAPACITOR,CHIP CERAMIC 0.01MF
C474	1-125-777-11	s	CAPACITOR CERAMIC 0.1MF/10V
C475	1-125-777-11	s	CAPACITOR CERAMIC 0.1MF/10V
C476	1-164-943-11	s	CAPACITOR,CHIP CERAMIC 0.01MF
C477	1-125-777-11	s	CAPACITOR CERAMIC 0.1MF/10V
C478	1-164-943-11	s	CAPACITOR,CHIP CERAMIC 0.01MF
C479	1-125-837-11	s	CAPACITOR,CHIP CERAMIC1MF/6.3V
C480	1-125-837-11	s	CAPACITOR,CHIP CERAMIC1MF/6.3V
C481	1-125-777-11	s	CAPACITOR CERAMIC 0.1MF/10V
C482	1-125-777-11	s	CAPACITOR CERAMIC 0.1MF/10V
C483	1-125-777-11	s	CAPACITOR CERAMIC 0.1MF/10V
C484	1-125-777-11	s	CAPACITOR CERAMIC 0.1MF/10V
C485	1-125-777-11	s	CAPACITOR CERAMIC 0.1MF/10V
C486	1-125-777-11	s	CAPACITOR CERAMIC 0.1MF/10V
C487	1-125-777-11	s	CAPACITOR CERAMIC 0.1MF/10V
C501	1-115-156-11	s	CAPACITOR,CERAMIC 1MF/10V(1608
C502	1-125-777-11	s	CAPACITOR CERAMIC 0.1MF/10V
C503	1-125-777-11	s	CAPACITOR CERAMIC 0.1MF/10V
C504	1-125-777-11	s	CAPACITOR CERAMIC 0.1MF/10V
C505	1-125-777-11	s	CAPACITOR CERAMIC 0.1MF/10V
C506	1-165-875-11	s	CAPACITOR, CHIP CERAMIC 10MF B
C508	1-125-777-11	s	CAPACITOR CERAMIC 0.1MF/10V
C509	1-125-777-11	s	CAPACITOR CERAMIC 0.1MF/10V
C510	1-125-777-11	s	CAPACITOR CERAMIC 0.1MF/10V
C549	1-125-777-11	s	CAPACITOR CERAMIC 0.1MF/10V
C550	1-125-777-11	s	CAPACITOR CERAMIC 0.1MF/10V
C551	1-107-820-11	s	CAPACITOR,CHIP CERAMIC 0.1MF F
C552	1-117-681-11	s	CAPACITOR, ELECT 100MF/16V
C553	1-107-820-11	s	CAPACITOR,CHIP CERAMIC 0.1MF F
C554	1-107-820-11	s	CAPACITOR,CHIP CERAMIC 0.1MF F
C555	1-107-820-11	s	CAPACITOR,CHIP CERAMIC 0.1MF F
C556	1-107-820-11	s	CAPACITOR,CHIP CERAMIC 0.1MF F
C557	1-107-820-11	s	CAPACITOR,CHIP CERAMIC 0.1MF F
C558	1-107-820-11	s	CAPACITOR,CHIP CERAMIC 0.1MF F
C559	1-107-820-11	s	CAPACITOR,CHIP CERAMIC 0.1MF F
C560	1-107-820-11	s	CAPACITOR,CHIP CERAMIC 0.1MF F
C561	1-107-820-11	s	CAPACITOR,CHIP CERAMIC 0.1MF F
C562	1-107-820-11	s	CAPACITOR,CHIP CERAMIC 0.1MF F
C563	1-107-820-11	s	CAPACITOR,CHIP CERAMIC 0.1MF F
C564	1-107-820-11	s	CAPACITOR,CHIP CERAMIC 0.1MF F
C565	1-128-394-11	s	CAPACITOR,ELECT 220MF/10V
C566	1-126-205-11	s	CAPACITOR,ELECT 47M/6.3
C567	1-107-820-11	s	CAPACITOR,CHIP CERAMIC 0.1MF F
C568	1-107-820-11	s	CAPACITOR,CHIP CERAMIC 0.1MF F
C569	1-107-820-11	s	CAPACITOR,CHIP CERAMIC 0.1MF F
C570	1-126-205-11	s	CAPACITOR,ELECT 47M/6.3
C571	1-107-820-11	s	CAPACITOR,CHIP CERAMIC 0.1MF F
C572	1-107-820-11	s	CAPACITOR,CHIP CERAMIC 0.1MF F
C573	1-107-820-11	s	CAPACITOR,CHIP CERAMIC 0.1MF F
C574	1-128-394-11	s	CAPACITOR,ELECT 220MF/10V
C575	1-107-820-11	s	CAPACITOR,CHIP CERAMIC 0.1MF F
C576	1-107-820-11	s	CAPACITOR,CHIP CERAMIC 0.1MF F
C577	1-107-820-11	s	CAPACITOR,CHIP CERAMIC 0.1MF F
C578	1-107-820-11	s	CAPACITOR,CHIP CERAMIC 0.1MF F

(C BOARD)

Ref. No. or Q'ty	Part No.	SP	Description
C579	1-107-820-11	s	CAPACITOR,CHIP CERAMIC 0.1MF F
C580	1-107-820-11	s	CAPACITOR,CHIP CERAMIC 0.1MF F
C581	1-107-820-11	s	CAPACITOR,CHIP CERAMIC 0.1MF F
C582	1-107-820-11	s	CAPACITOR,CHIP CERAMIC 0.1MF F
C583	1-107-820-11	s	CAPACITOR,CHIP CERAMIC 0.1MF F
C584	1-107-820-11	s	CAPACITOR,CHIP CERAMIC 0.1MF F
C601	1-125-777-11	s	CAPACITOR CERAMIC 0.1MF/10V
C602	1-124-778-00	s	CAPACITOR,ELECT 22MF/6.3V
C603	1-125-777-11	s	CAPACITOR CERAMIC 0.1MF/10V
C604	1-125-777-11	s	CAPACITOR CERAMIC 0.1MF/10V
C605	1-125-777-11	s	CAPACITOR CERAMIC 0.1MF/10V
C606	1-125-777-11	s	CAPACITOR CERAMIC 0.1MF/10V
C607	1-125-777-11	s	CAPACITOR CERAMIC 0.1MF/10V
C608	1-125-777-11	s	CAPACITOR CERAMIC 0.1MF/10V
C609	1-125-777-11	s	CAPACITOR CERAMIC 0.1MF/10V
C651	1-125-777-11	s	CAPACITOR CERAMIC 0.1MF/10V
C652	1-125-777-11	s	CAPACITOR CERAMIC 0.1MF/10V
C654	1-125-777-11	s	CAPACITOR CERAMIC 0.1MF/10V
C655	1-125-777-11	s	CAPACITOR CERAMIC 0.1MF/10V
C657	1-126-395-11	s	CAPACITOR,ELECT 22MF/16V(CHIP)
C658	1-125-777-11	s	CAPACITOR CERAMIC 0.1MF/10V
C659	1-164-852-11	s	CAPACITOR,CHIP CERAMIC 12PF/16
C660	1-125-777-11	s	CAPACITOR CERAMIC 0.1MF/10V
C662	1-164-852-11	s	CAPACITOR,CHIP CERAMIC 12PF/16
C663	1-164-943-11	s	CAPACITOR,CHIP CERAMIC 0.01MF
C664	1-125-777-11	s	CAPACITOR CERAMIC 0.1MF/10V
C665	1-125-777-11	s	CAPACITOR CERAMIC 0.1MF/10V
C666	1-126-395-11	s	CAPACITOR,ELECT 22MF/16V(CHIP)
C667	1-107-820-11	s	CAPACITOR,CHIP CERAMIC 0.1MF F
C668	1-107-820-11	s	CAPACITOR,CHIP CERAMIC 0.1MF F
C669	1-107-820-11	s	CAPACITOR,CHIP CERAMIC 0.1MF F
C670	1-107-820-11	s	CAPACITOR,CHIP CERAMIC 0.1MF F
C671	1-107-820-11	s	CAPACITOR,CHIP CERAMIC 0.1MF F
C672	1-107-820-11	s	CAPACITOR,CHIP CERAMIC 0.1MF F
C673	1-107-820-11	s	CAPACITOR,CHIP CERAMIC 0.1MF F
C674	1-107-820-11	s	CAPACITOR,CHIP CERAMIC 0.1MF F
C675	1-107-820-11	s	CAPACITOR,CHIP CERAMIC 0.1MF F
C676	1-107-820-11	s	CAPACITOR,CHIP CERAMIC 0.1MF F
C677	1-107-820-11	s	CAPACITOR,CHIP CERAMIC 0.1MF F
C678	1-107-820-11	s	CAPACITOR,CHIP CERAMIC 0.1MF F
C679	1-107-820-11	s	CAPACITOR,CHIP CERAMIC 0.1MF F
C680	1-107-820-11	s	CAPACITOR,CHIP CERAMIC 0.1MF F
C681	1-107-820-11	s	CAPACITOR,CHIP CERAMIC 0.1MF F
C682	1-107-820-11	s	CAPACITOR,CHIP CERAMIC 0.1MF F
C683	1-107-820-11	s	CAPACITOR,CHIP CERAMIC 0.1MF F
C684	1-107-820-11	s	CAPACITOR,CHIP CERAMIC 0.1MF F
C685	1-107-820-11	s	CAPACITOR,CHIP CERAMIC 0.1MF F
C686	1-126-395-11	s	CAPACITOR,ELECT 22MF/16V(CHIP)
C687	1-107-820-11	s	CAPACITOR,CHIP CERAMIC 0.1MF F
C688	1-107-820-11	s	CAPACITOR,CHIP CERAMIC 0.1MF F
C689	1-107-820-11	s	CAPACITOR,CHIP CERAMIC 0.1MF F
C690	1-107-820-11	s	CAPACITOR,CHIP CERAMIC 0.1MF F
C691	1-107-820-11	s	CAPACITOR,CHIP CERAMIC 0.1MF F
C692	1-107-820-11	s	CAPACITOR,CHIP CERAMIC 0.1MF F
C693	1-107-820-11	s	CAPACITOR,CHIP CERAMIC 0.1MF F
C694	1-107-820-11	s	CAPACITOR,CHIP CERAMIC 0.1MF F
C695	1-107-820-11	s	CAPACITOR,CHIP CERAMIC 0.1MF F
C696	1-107-820-11	s	CAPACITOR,CHIP CERAMIC 0.1MF F
C701	1-107-820-11	s	CAPACITOR,CHIP CERAMIC 0.1MF F

(C BOARD)

Ref. No. or Q'ty	Part No.	SP	Description
C702	1-164-874-11	s	CAPACITOR,CHIP CERAMIC 100PF
C703	1-107-820-11	s	CAPACITOR,CHIP CERAMIC 0.1MF F
C704	1-107-820-11	s	CAPACITOR,CHIP CERAMIC 0.1MF F
C705	1-107-820-11	s	CAPACITOR,CHIP CERAMIC 0.1MF F
C706	1-107-820-11	s	CAPACITOR,CHIP CERAMIC 0.1MF F
C707	1-107-820-11	s	CAPACITOR,CHIP CERAMIC 0.1MF F
C708	1-107-820-11	s	CAPACITOR,CHIP CERAMIC 0.1MF F
C709	1-107-820-11	s	CAPACITOR,CHIP CERAMIC 0.1MF F
C710	1-107-820-11	s	CAPACITOR,CHIP CERAMIC 0.1MF F
C711	1-107-820-11	s	CAPACITOR,CHIP CERAMIC 0.1MF F
C712	1-126-205-11	s	CAPACITOR,ELECT 47M/6.3
C713	1-107-820-11	s	CAPACITOR,CHIP CERAMIC 0.1MF F
C715	1-107-820-11	s	CAPACITOR,CHIP CERAMIC 0.1MF F
C716	1-164-943-11	s	CAPACITOR,CHIP CERAMIC 0.01MF
C717	1-107-820-11	s	CAPACITOR,CHIP CERAMIC 0.1MF F
C718	1-126-205-11	s	CAPACITOR,ELECT 47M/6.3
C719	1-107-820-11	s	CAPACITOR,CHIP CERAMIC 0.1MF F
C724	1-164-935-11	s	CAPACITOR,CHIP CERAMIC 470PF
C725	1-164-935-11	s	CAPACITOR,CHIP CERAMIC 470PF
C726	1-107-820-11	s	CAPACITOR,CHIP CERAMIC 0.1MF F
C727	1-107-820-11	s	CAPACITOR,CHIP CERAMIC 0.1MF F
C728	1-107-820-11	s	CAPACITOR,CHIP CERAMIC 0.1MF F
C729	1-107-820-11	s	CAPACITOR,CHIP CERAMIC 0.1MF F
C730	1-107-820-11	s	CAPACITOR,CHIP CERAMIC 0.1MF F
C731	1-107-820-11	s	CAPACITOR,CHIP CERAMIC 0.1MF F
C751	1-115-339-11	s	CAPACITOR,CERAMIC 0.1MF/50V
C752	1-127-715-11	s	CAPACITOR,CERAMIC 0.22MF B1608
C753	1-127-715-11	s	CAPACITOR,CERAMIC 0.22MF B1608
C754	1-164-943-11	s	CAPACITOR,CHIP CERAMIC 0.01MF
C756	1-115-339-11	s	CAPACITOR,CERAMIC 0.1MF/50V
C757	1-115-339-11	s	CAPACITOR,CERAMIC 0.1MF/50V
C759	1-107-820-11	s	CAPACITOR,CHIP CERAMIC 0.1MF F
C760	1-127-715-11	s	CAPACITOR,CERAMIC 0.22MF B1608
C761	1-107-820-11	s	CAPACITOR,CHIP CERAMIC 0.1MF F
C762	1-117-681-11	s	CAPACITOR, ELECT 100MF/16V
C763	1-127-715-11	s	CAPACITOR,CERAMIC 0.22MF B1608
C764	1-127-715-11	s	CAPACITOR,CERAMIC 0.22MF B1608
C765	1-127-715-11	s	CAPACITOR,CERAMIC 0.22MF B1608
C766	1-127-715-11	s	CAPACITOR,CERAMIC 0.22MF B1608
C767	1-127-715-11	s	CAPACITOR,CERAMIC 0.22MF B1608
C768	1-115-339-11	s	CAPACITOR,CERAMIC 0.1MF/50V
C769	1-128-992-11	s	CAPACITOR ELECT 47MF 25V
C770	1-128-992-11	s	CAPACITOR ELECT 47MF 25V
C771	1-115-339-11	s	CAPACITOR,CERAMIC 0.1MF/50V
C772	1-115-339-11	s	CAPACITOR,CERAMIC 0.1MF/50V
C773	1-115-339-11	s	CAPACITOR,CERAMIC 0.1MF/50V
C774	1-115-339-11	s	CAPACITOR,CERAMIC 0.1MF/50V
C775	1-117-681-11	s	CAPACITOR, ELECT 100MF/16V
C776	1-164-156-11	s	CAPACITOR,CERAMIC 0.1MF/25V F
C777	1-128-992-11	s	CAPACITOR ELECT 47MF 25V
C801	1-115-339-11	s	CAPACITOR,CERAMIC 0.1MF/50V
C802	1-127-715-11	s	CAPACITOR,CERAMIC 0.22MF B1608
C803	1-127-715-11	s	CAPACITOR,CERAMIC 0.22MF B1608
C809	1-107-820-11	s	CAPACITOR,CHIP CERAMIC 0.1MF F
C810	1-127-715-11	s	CAPACITOR,CERAMIC 0.22MF B1608
C811	1-107-820-11	s	CAPACITOR,CHIP CERAMIC 0.1MF F
C812	1-117-681-11	s	CAPACITOR, ELECT 100MF/16V
C813	1-127-715-11	s	CAPACITOR,CERAMIC 0.22MF B1608
C814	1-127-715-11	s	CAPACITOR,CERAMIC 0.22MF B1608

(C BOARD)

Ref. No. or Q'ty	Part No.	SP	Description
C815	1-127-715-11	s	CAPACITOR,CERAMIC 0.22MF B1608
C816	1-127-715-11	s	CAPACITOR,CERAMIC 0.22MF B1608
C817	1-127-715-11	s	CAPACITOR,CERAMIC 0.22MF B1608
C818	1-115-339-11	s	CAPACITOR,CERAMIC 0.1MF/50V
C819	1-128-992-11	s	CAPACITOR ELECT 47MF 25V
C820	1-128-992-11	s	CAPACITOR ELECT 47MF 25V
C821	1-115-339-11	s	CAPACITOR,CERAMIC 0.1MF/50V
C822	1-115-339-11	s	CAPACITOR,CERAMIC 0.1MF/50V
C823	1-115-339-11	s	CAPACITOR,CERAMIC 0.1MF/50V
C824	1-115-339-11	s	CAPACITOR,CERAMIC 0.1MF/50V
C825	1-117-681-11	s	CAPACITOR, ELECT 100MF/16V
C826	1-164-156-11	s	CAPACITOR,CERAMIC 0.1MF/25V F
C851	1-115-339-11	s	CAPACITOR,CERAMIC 0.1MF/50V
C852	1-127-715-11	s	CAPACITOR,CERAMIC 0.22MF B1608
C853	1-127-715-11	s	CAPACITOR,CERAMIC 0.22MF B1608
C859	1-107-820-11	s	CAPACITOR,CHIP CERAMIC 0.1MF F
C860	1-127-715-11	s	CAPACITOR,CERAMIC 0.22MF B1608
C861	1-107-820-11	s	CAPACITOR,CHIP CERAMIC 0.1MF F
C862	1-117-681-11	s	CAPACITOR, ELECT 100MF/16V
C863	1-127-715-11	s	CAPACITOR,CERAMIC 0.22MF B1608
C864	1-127-715-11	s	CAPACITOR,CERAMIC 0.22MF B1608
C865	1-127-715-11	s	CAPACITOR,CERAMIC 0.22MF B1608
C866	1-127-715-11	s	CAPACITOR,CERAMIC 0.22MF B1608
C867	1-127-715-11	s	CAPACITOR,CERAMIC 0.22MF B1608
C868	1-115-339-11	s	CAPACITOR,CERAMIC 0.1MF/50V
C869	1-128-992-11	s	CAPACITOR ELECT 47MF 25V
C870	1-128-992-11	s	CAPACITOR ELECT 47MF 25V
C871	1-115-339-11	s	CAPACITOR,CERAMIC 0.1MF/50V
C872	1-115-339-11	s	CAPACITOR,CERAMIC 0.1MF/50V
C873	1-115-339-11	s	CAPACITOR,CERAMIC 0.1MF/50V
C874	1-115-339-11	s	CAPACITOR,CERAMIC 0.1MF/50V
C875	1-117-681-11	s	CAPACITOR, ELECT 100MF/16V
C876	1-164-156-11	s	CAPACITOR,CERAMIC 0.1MF/25V F
C901	1-125-777-11	s	CAPACITOR CERAMIC 0.1MF/10V
C902	1-125-777-11	s	CAPACITOR CERAMIC 0.1MF/10V
C903	1-125-777-11	s	CAPACITOR CERAMIC 0.1MF/10V
C904	1-125-777-11	s	CAPACITOR CERAMIC 0.1MF/10V
C905	1-127-715-11	s	CAPACITOR,CERAMIC 0.22MF B1608
C906	1-164-882-11	s	CAPACITOR,CERAMIC 220PF/16V CH
C907	1-127-715-11	s	CAPACITOR,CERAMIC 0.22MF B1608
C908	1-115-566-11	s	CAPACITOR,CERAMIC 4.7MF B/6.3V
C909	1-107-820-11	s	CAPACITOR,CHIP CERAMIC 0.1MF F
C910	1-125-777-11	s	CAPACITOR CERAMIC 0.1MF/10V
C911	1-125-777-11	s	CAPACITOR CERAMIC 0.1MF/10V
C912	1-125-777-11	s	CAPACITOR CERAMIC 0.1MF/10V
C913	1-164-939-11	s	CAPACITOR,CHIP CERAMIC 2200PF
C914	1-164-939-11	s	CAPACITOR,CHIP CERAMIC 2200PF
C915	1-164-939-11	s	CAPACITOR,CHIP CERAMIC 2200PF
C916	1-164-939-11	s	CAPACITOR,CHIP CERAMIC 2200PF
C917	1-125-777-11	s	CAPACITOR CERAMIC 0.1MF/10V
C918	1-125-837-11	s	CAPACITOR,CHIP CERAMIC1MF/6.3V
C941	1-164-862-11	s	CAPACITOR,CHIP CERAMIC 33PF/16
C942	1-164-862-11	s	CAPACITOR,CHIP CERAMIC 33PF/16
C943	1-125-777-11	s	CAPACITOR CERAMIC 0.1MF/10V
C944	1-164-874-11	s	CAPACITOR,CHIP CERAMIC 100PF
C945	1-164-874-11	s	CAPACITOR,CHIP CERAMIC 100PF
C946	1-125-777-11	s	CAPACITOR CERAMIC 0.1MF/10V
C947	1-125-777-11	s	CAPACITOR CERAMIC 0.1MF/10V
C948	1-117-681-11	s	CAPACITOR, ELECT 100MF/16V

(C BOARD)

Ref. No. or Q'ty	Part No.	SP	Description
C949	1-115-156-11	s	CAPACITOR,CERAMIC 1MF/10V(1608
C981	1-125-777-11	s	CAPACITOR CERAMIC 0.1MF/10V
C983	1-115-156-11	s	CAPACITOR,CERAMIC 1MF/10V(1608
C984	1-115-156-11	s	CAPACITOR,CERAMIC 1MF/10V(1608
C985	1-125-777-11	s	CAPACITOR CERAMIC 0.1MF/10V
C986	1-125-777-11	s	CAPACITOR CERAMIC 0.1MF/10V
C987	1-125-777-11	s	CAPACITOR CERAMIC 0.1MF/10V
C988	1-125-777-11	s	CAPACITOR CERAMIC 0.1MF/10V
C989	1-125-777-11	s	CAPACITOR CERAMIC 0.1MF/10V
C991	1-125-777-11	s	CAPACITOR CERAMIC 0.1MF/10V
C992	1-125-777-11	s	CAPACITOR CERAMIC 0.1MF/10V
CN102	1-778-965-21	s	PIN, CONNECTOR (PC BOARD) 12P
CN103	1-785-900-11	s	CONNECTOR
CN151	1-580-057-11	o	PIN,CONNECTOR 4P
CN152	1-580-056-21	o	PIN,CONNECTOR 3P
CN154	1-770-620-21	s	PIN, CONNECTOR 3P
CN155	1-764-007-11	s	PIN, CONNECTOR (SMD) 12P
CN156	1-695-223-21	o	PIN,CONNECTOR (SMD) 10P
CN157	1-770-621-21	s	PIN, CONNECTOR 4P
CN251	1-770-454-21	o	CONNECTOR, BOARD TO BOARD 70P
CN252	1-770-454-21	o	CONNECTOR, BOARD TO BOARD 70P
CN253	1-770-454-21	o	CONNECTOR, BOARD TO BOARD 70P
CN701	1-779-884-11	s	PLUG, CONNECTOR 4P
CN752	1-794-823-11	s	CONNECTOR (ZIF), FPC/FFC 32P
CN802	1-794-823-11	s	CONNECTOR (ZIF), FPC/FFC 32P
CN852	1-794-823-11	s	CONNECTOR (ZIF), FPC/FFC 32P
CN901	1-580-056-21	o	PIN,CONNECTOR 3P
CN902	1-580-055-21	o	PIN, CONNECTOR 2P
D101	8-719-024-77	s	DIODE HN1D03FU-TE85L
D102	8-719-045-51	s	DIODE SEC2422C
D103	8-719-045-61	s	DIODE SEC1901C
D104	8-719-045-61	s	DIODE SEC1901C
D105	8-719-045-53	s	DIODE SEC1801C
D152	8-719-073-11	s	DIODE BZA456A
D155	6-500-318-01	s	DIODE NSCW100
D156	6-500-318-01	s	DIODE NSCW100
D157	6-500-318-01	s	DIODE NSCW100
D158	6-500-318-01	s	DIODE NSCW100
D401	8-719-941-86	s	DIODE DAN202U
D402	8-719-941-86	s	DIODE DAN202U
D403	8-719-988-61	s	DIODE 1SS355TE-17
D501	8-719-988-61	s	DIODE 1SS355TE-17
D601	8-719-988-61	s	DIODE 1SS355TE-17
D652	8-719-941-86	s	DIODE DAN202U
D935	8-719-058-24	s	DIODE RB501V-40TE17
D936	8-719-036-94	s	DIODE RD5.6SB-T1
D937	8-719-058-24	s	DIODE RB501V-40TE17
D938	8-719-988-61	s	DIODE 1SS355TE-17
D981	8-719-024-77	s	DIODE HN1D03FU-TE85L
FB101	1-414-921-11	s	INDUCTOR, FERRITE BEAD
FB102	1-414-921-11	s	INDUCTOR, FERRITE BEAD
FB155	1-414-921-11	s	INDUCTOR, FERRITE BEAD
FB156	1-414-921-11	s	INDUCTOR, FERRITE BEAD
FB157	1-414-921-11	s	INDUCTOR, FERRITE BEAD
FB158	1-414-921-11	s	INDUCTOR, FERRITE BEAD
FB159	1-414-921-11	s	INDUCTOR, FERRITE BEAD
FB160	1-414-921-11	s	INDUCTOR, FERRITE BEAD

(C BOARD)

Ref. No. or Q'ty	Part No.	SP	Description
FB161	1-414-921-11	s	INDUCTOR, FERRITE BEAD
FB162	1-414-921-11	s	INDUCTOR, FERRITE BEAD
FB167	1-400-150-11	s	FERRITE, EMI (SMD)
FB169	1-400-150-11	s	FERRITE, EMI (SMD)
FB171	1-414-921-11	s	INDUCTOR, FERRITE BEAD
FB172	1-414-921-11	s	INDUCTOR, FERRITE BEAD
FB173	1-414-921-11	s	INDUCTOR, FERRITE BEAD
FB174	1-414-921-11	s	INDUCTOR, FERRITE BEAD
FB251	1-414-921-11	s	INDUCTOR, FERRITE BEAD
FB252	1-414-921-11	s	INDUCTOR, FERRITE BEAD
FB301	1-414-921-11	s	INDUCTOR, FERRITE BEAD
FB305	1-414-234-11	s	INDUCTOR,FERRITE BEAD
FB306	1-414-234-11	s	INDUCTOR,FERRITE BEAD
FB307	1-414-921-11	s	INDUCTOR, FERRITE BEAD
FB308	1-414-921-11	s	INDUCTOR, FERRITE BEAD
FB309	1-414-921-11	s	INDUCTOR, FERRITE BEAD
FB351	1-414-921-11	s	INDUCTOR, FERRITE BEAD
FB352	1-414-921-11	s	INDUCTOR, FERRITE BEAD
FB451	1-414-921-11	s	INDUCTOR, FERRITE BEAD
FB453	1-414-921-11	s	INDUCTOR, FERRITE BEAD
FB501	1-414-921-11	s	INDUCTOR, FERRITE BEAD
FB550	1-414-921-11	s	INDUCTOR, FERRITE BEAD
FB551	1-414-766-21	s	INDUCTOR,FERRITE BEAD
FB552	1-414-766-21	s	INDUCTOR,FERRITE BEAD
FB553	1-414-766-21	s	INDUCTOR,FERRITE BEAD
FB554	1-414-766-21	s	INDUCTOR,FERRITE BEAD
FB601	1-414-921-11	s	INDUCTOR, FERRITE BEAD
FB651	1-414-921-11	s	INDUCTOR, FERRITE BEAD
FB652	1-414-921-11	s	INDUCTOR, FERRITE BEAD
FB653	1-400-150-11	s	FERRITE, EMI (SMD)
FB654	1-400-150-11	s	FERRITE, EMI (SMD)
FB701	1-414-921-11	s	INDUCTOR, FERRITE BEAD
FB702	1-414-921-11	s	INDUCTOR, FERRITE BEAD
FB703	1-414-921-11	s	INDUCTOR, FERRITE BEAD
FB704	1-414-921-11	s	INDUCTOR, FERRITE BEAD
FB705	1-414-921-11	s	INDUCTOR, FERRITE BEAD
FB706	1-414-921-11	s	INDUCTOR, FERRITE BEAD
FB707	1-414-921-11	s	INDUCTOR, FERRITE BEAD
FB708	1-414-921-11	s	INDUCTOR, FERRITE BEAD
FB709	1-414-921-11	s	INDUCTOR, FERRITE BEAD
FB710	1-414-921-11	s	INDUCTOR, FERRITE BEAD
FB711	1-414-921-11	s	INDUCTOR, FERRITE BEAD
FB751	1-414-921-11	s	INDUCTOR, FERRITE BEAD
FB756	1-414-921-11	s	INDUCTOR, FERRITE BEAD
FB757	1-414-921-11	s	INDUCTOR, FERRITE BEAD
FB801	1-414-921-11	s	INDUCTOR, FERRITE BEAD
FB807	1-414-921-11	s	INDUCTOR, FERRITE BEAD
FB851	1-414-921-11	s	INDUCTOR, FERRITE BEAD
FB857	1-414-921-11	s	INDUCTOR, FERRITE BEAD
FB901	1-469-324-21	s	FERRITE, EMI (SMD) 4.7UH
FB902	1-469-324-21	s	FERRITE, EMI (SMD) 4.7UH
FB903	1-469-324-21	s	FERRITE, EMI (SMD) 4.7UH
FB904	1-469-324-21	s	FERRITE, EMI (SMD) 4.7UH
FB932	1-414-921-11	s	INDUCTOR, FERRITE BEAD
FL151	1-239-899-21	s	FILTER, CHIP EMI
FL152	1-239-899-21	s	FILTER, CHIP EMI
FL301	1-239-848-21	s	FILTER, LOW PASS
FL302	1-239-848-21	s	FILTER, LOW PASS
FL303	1-239-848-21	s	FILTER, LOW PASS

(C BOARD)

Ref. No. or Q'ty	Part No.	SP	Description
IC103	6-702-624-01	s	IC HD64F2377VFQ33V
IC104	6-703-225-01	s	IC S-80928CNMC-G8Y-T2
IC105	6-702-688-01	s	IC M24C64-WMN6T(B)
IC106	8-759-592-49	s	IC TC7SZ125FU(TE85R)
IC107	8-759-491-47	s	IC TC74VHCT08FT (EL)
IC108	8-759-548-99	s	IC SN74LV08APWR
IC109	8-759-485-79	s	IC TC7SET08FU (TE85L)
IC154	8-759-681-47	s	IC IRMF-A0T-QTP
IC201	8-759-460-81	s	IC BA12FP-E2
IC202	8-759-533-85	s	IC L88M05T-FA-TL
IC203	8-759-533-85	s	IC L88M05T-FA-TL
IC204	8-759-533-85	s	IC L88M05T-FA-TL
IC205	8-759-388-31	s	IC PQ20VZ1U
IC206	8-759-460-79	s	IC BA09FP-E2
IC207	8-759-460-72	s	IC BA033FP
IC208	8-759-460-72	s	IC BA033FP
IC209	8-759-659-65	s	IC LP2985IM5X-3.3
IC210	8-759-460-72	s	IC BA033FP
IC211	8-759-533-85	s	IC L88M05T-FA-TL
IC212	8-759-652-56	s	IC BA033F-E2
IC213	8-759-539-89	s	IC LM2990SX-5.0
IC214	8-759-582-37	s	IC PQ2TZ15U
IC215	8-759-582-37	s	IC PQ2TZ15U
IC216	8-759-533-85	s	IC L88M05T-FA-TL
IC217	8-759-659-65	s	IC LP2985IM5X-3.3
IC218	8-759-582-37	s	IC PQ2TZ15U
IC251	8-759-491-47	s	IC TC74VHCT08FT (EL)
IC252	8-759-491-47	s	IC TC74VHCT08FT (EL)
IC301	6-700-960-01	s	IC UPD64083GF-3BA
IC352 ✻1			IC SAA7118E/V1.518
IC353	8-759-447-77	s	IC TC7WH74FU (TE12R)
IC401	8-759-457-53	s	IC GS1881-CTA
IC402	8-759-700-78	s	IC NJM082M
IC403	8-759-675-54	s	IC TC7W53FK-TE85R
IC404	8-759-092-80	s	IC SN75157PS
IC405	8-759-646-02	s	IC M52347FP-TE
IC406	8-759-472-35	s	IC 74VHC221AMTCX
IC451	6-703-688-01	s	IC AD9888XS-170 AD80073
IC501	8-759-549-20	s	IC SN74LV541APWR
IC502	8-759-549-20	s	IC SN74LV541APWR
IC503	8-759-549-20	s	IC SN74LV541APWR
IC504	8-759-549-20	s	IC SN74LV541APWR
IC505	8-759-549-20	s	IC SN74LV541APWR
IC506	8-759-549-20	s	IC SN74LV541APWR
IC507	8-759-549-20	s	IC SN74LV541APWR
IC550 ✻1			IC CXD9721GC
IC551	6-703-225-01	s	IC S-80928CNMC-G8Y-T2
IC552	8-759-663-74	s	IC HY57V161610DTC-7TR
IC601 ✻1			IC CXD9746GC
IC651 ✻1			IC PW164B-20TK
IC652	8-759-439-67	s	IC TC7W126FU(TE12R)
IC653	8-759-471-85	s	IC 74VHC00MTCX
IC654	6-703-225-01	s	IC S-80928CNMC-G8Y-T2
IC655	8-759-471-89	s	IC 74VHC02MTCX
IC656	8-759-549-01	s	IC SN74LV125APWR
IC657	8-759-549-01	s	IC SN74LV125APWR
IC660	6-802-436-03	s	IC MX29LV800TTC-70G-SX1738-3
IC701	8-759-831-52	s	IC TC7WH125FK(TE85R)
IC702 ✻1			IC CXD9607GB

(C BOARD)

Ref. No. or Q'ty	Part No.	SP	Description
IC703	8-759-447-77	s	IC TC7WH74FU (TE12R)
IC704	8-759-548-99	s	IC SN74LV08APWR
IC705	6-703-225-01	s	IC S-80928CNMC-G8Y-T2
IC706	6-702-688-01	s	IC M24C64-WMN6T(B)
IC708	8-759-542-46	s	IC M62392FP
IC709	8-759-679-58	s	IC SN74AHCT541PWR
IC710	8-759-679-58	s	IC SN74AHCT541PWR
IC711	6-700-915-01	s	IC SN74AHCT04PWR
IC712	8-759-679-58	s	IC SN74AHCT541PWR
IC713	8-759-490-43	s	IC TC74VHCT540AFT(EL)
IC751	8-752-103-51	s	IC CXA7000R-T6
IC753	8-759-252-41	s	IC TK11900MTL
IC801	8-752-103-51	s	IC CXA7000R-T6
IC851	8-752-103-51	s	IC CXA7000R-T6
IC901	6-701-203-01	s	IC TPA2000D2PWPR
IC902	8-759-472-35	s	IC 74VHC221AMTCX
IC934	8-759-697-26	s	IC RCV4-A1T-MASK-25
IC981	8-759-472-35	s	IC 74VHC221AMTCX
IC983	8-759-598-43	s	IC TC7WH04FK(TE85R)
IC984	8-759-698-31	s	IC TC7WH74FK(TE85R)
IC985	8-759-549-01	s	IC SN74LV125APWR
IC986	8-759-675-53	s	IC TC7WH32FK-TE85R
IC987	8-759-656-54	s	IC TC7WH14FK(TE85R)
IC988	8-759-549-01	s	IC SN74LV125APWR
L204	1-409-529-41	s	COIL, CHOKE 10UH
L210	1-409-529-41	s	COIL, CHOKE 10UH
L301	1-412-058-11	s	INDUCTOR,SMALL TYPE 10UH
L302	1-412-002-31	s	CHIP INDUCTOR 4.7UH (2012)
L303	1-412-058-11	s	INDUCTOR,SMALL TYPE 10UH
L304	1-412-058-11	s	INDUCTOR,SMALL TYPE 10UH
L305	1-412-058-11	s	INDUCTOR,SMALL TYPE 10UH
L306	1-412-058-11	s	INDUCTOR,SMALL TYPE 10UH
L307	1-412-058-11	s	INDUCTOR,SMALL TYPE 10UH
L352	1-469-523-91	s	INDUCTOR 2.2UH (NLFV25)
L353	1-469-525-91	s	INDUCTOR 10UH (NLFV25)
L355	1-469-525-91	s	INDUCTOR 10UH (NLFV25)
L401	1-412-058-11	s	INDUCTOR,SMALL TYPE 10UH
L402	1-412-058-11	s	INDUCTOR,SMALL TYPE 10UH
L403	1-412-058-11	s	INDUCTOR,SMALL TYPE 10UH
L404	1-412-058-11	s	INDUCTOR,SMALL TYPE 10UH
L405	1-469-523-91	s	INDUCTOR 2.2UH (NLFV25)
L651	1-469-528-91	s	INDUCTOR 100UH (NLFV25)
L701	1-469-523-91	s	INDUCTOR 2.2UH (NLFV25)
L751	1-410-369-11	s	INDUCTOR,CHIP 1UH (3225)
L752	1-410-369-11	s	INDUCTOR,CHIP 1UH (3225)
L753	1-414-078-11	s	INDUCTOR 10UH
L801	1-410-369-11	s	INDUCTOR,CHIP 1UH (3225)
L802	1-410-369-11	s	INDUCTOR,CHIP 1UH (3225)
L803	1-414-078-11	s	INDUCTOR 10UH
L851	1-410-369-11	s	INDUCTOR,CHIP 1UH (3225)
L852	1-410-369-11	s	INDUCTOR,CHIP 1UH (3225)
L853	1-414-078-11	s	INDUCTOR 10UH
Q101	6-550-014-01	s	TRANSISTOR SSM6N15FU(TE85R)
Q102	8-729-013-28	s	TRANSISTOR HN1B01FU-TE85R
Q103	8-729-013-26	s	TRANSISTOR HN1C03FU-TE85R
Q104	8-729-028-80	s	TRANSISTOR DTA123EUA-T106
Q105	8-729-028-80	s	TRANSISTOR DTA123EUA-T106
Q106	8-729-028-80	s	TRANSISTOR DTA123EUA-T106

(C BOARD)

Ref. No. or Q'ty	Part No.	SP	Description
Q107	8-729-028-80	s	TRANSISTOR DTA123EUA-T106
Q108	8-729-028-80	s	TRANSISTOR DTA123EUA-T106
Q109	6-550-014-01	s	TRANSISTOR SSM6N15FU(TE85R)
Q151	8-729-013-26	s	TRANSISTOR HN1C03FU-TE85R
Q153	8-729-029-03	s	TRANSISTOR DTC123EUA-T106
Q251	8-729-029-14	s	TRANSISTOR DTC144EUA-T106
Q301	8-729-026-53	s	TRANSISTOR 2SA1576A-T106-QR
Q302	8-729-026-53	s	TRANSISTOR 2SA1576A-T106-QR
Q303	8-729-026-53	s	TRANSISTOR 2SA1576A-T106-QR
Q304	8-729-905-35	s	TRANSISTOR 2SC4081-R
Q305	8-729-026-53	s	TRANSISTOR 2SA1576A-T106-QR
Q306	8-729-905-35	s	TRANSISTOR 2SC4081-R
Q307	8-729-026-53	s	TRANSISTOR 2SA1576A-T106-QR
Q308	8-729-905-35	s	TRANSISTOR 2SC4081-R
Q309	8-729-905-35	s	TRANSISTOR 2SC4081-R
Q310	8-729-026-53	s	TRANSISTOR 2SA1576A-T106-QR
Q311	8-729-905-35	s	TRANSISTOR 2SC4081-R
Q312	8-729-905-35	s	TRANSISTOR 2SC4081-R
Q313	8-729-905-35	s	TRANSISTOR 2SC4081-R
Q314	8-729-905-35	s	TRANSISTOR 2SC4081-R
Q315	8-729-905-35	s	TRANSISTOR 2SC4081-R
Q316	8-729-905-35	s	TRANSISTOR 2SC4081-R
Q317	8-729-905-35	s	TRANSISTOR 2SC4081-R
Q351	8-729-905-35	s	TRANSISTOR 2SC4081-R
Q352	8-729-905-35	s	TRANSISTOR 2SC4081-R
Q353	8-729-905-35	s	TRANSISTOR 2SC4081-R
Q401	8-729-026-53	s	TRANSISTOR 2SA1576A-T106-QR
Q402	8-729-905-35	s	TRANSISTOR 2SC4081-R
Q403	8-729-905-35	s	TRANSISTOR 2SC4081-R
Q404	8-729-905-35	s	TRANSISTOR 2SC4081-R
Q405	8-729-026-53	s	TRANSISTOR 2SA1576A-T106-QR
Q406	8-729-905-35	s	TRANSISTOR 2SC4081-R
Q407	8-729-026-53	s	TRANSISTOR 2SA1576A-T106-QR
Q408	8-729-013-28	s	TRANSISTOR HN1B01FU-TE85R
Q409	8-729-013-28	s	TRANSISTOR HN1B01FU-TE85R
Q410	8-729-427-70	s	TRANSISTOR XP4401
Q411	8-729-905-35	s	TRANSISTOR 2SC4081-R
Q412	8-729-013-28	s	TRANSISTOR HN1B01FU-TE85R
Q413	8-729-029-14	s	TRANSISTOR DTC144EUA-T106
Q420	8-729-029-14	s	TRANSISTOR DTC144EUA-T106
Q421	8-729-013-28	s	TRANSISTOR HN1B01FU-TE85R
Q501	8-729-029-14	s	TRANSISTOR DTC144EUA-T106
Q651	8-729-047-32	s	TRANSISTOR SI4425DY-T1
Q652	8-729-029-14	s	TRANSISTOR DTC144EUA-T106
Q701	8-729-013-28	s	TRANSISTOR HN1B01FU-TE85R
Q702	8-729-013-26	s	TRANSISTOR HN1C03FU-TE85R
Q703	8-729-029-14	s	TRANSISTOR DTC144EUA-T106
Q751	8-729-013-28	s	TRANSISTOR HN1B01FU-TE85R
Q752	8-729-013-28	s	TRANSISTOR HN1B01FU-TE85R
Q801	8-729-013-28	s	TRANSISTOR HN1B01FU-TE85R
Q802	8-729-013-28	s	TRANSISTOR HN1B01FU-TE85R
Q851	8-729-013-28	s	TRANSISTOR HN1B01FU-TE85R
Q852	8-729-013-28	s	TRANSISTOR HN1B01FU-TE85R
Q901	8-729-029-14	s	TRANSISTOR DTC144EUA-T106
Q902	8-729-029-14	s	TRANSISTOR DTC144EUA-T106
Q933	8-729-029-14	s	TRANSISTOR DTC144EUA-T106
Q934	8-729-013-28	s	TRANSISTOR HN1B01FU-TE85R
Q935	8-729-029-14	s	TRANSISTOR DTC144EUA-T106

(C BOARD)

Ref. No. or Q'ty	Part No.	SP	Description
R2	1-218-959-11	s	RESISTOR, CHIP 3.3K
R4	1-211-987-11	s	RESISTOR,CHIP 56 1/10W (1608)
R5	1-211-987-11	s	RESISTOR,CHIP 56 1/10W (1608)
R7	1-218-959-11	s	RESISTOR, CHIP 3.3K
R8	1-218-957-11	s	RESISTOR,CHIP 2.2K 1/16W(1608)
R9	1-211-987-11	s	RESISTOR,CHIP 56 1/10W (1608)
R11	1-218-959-11	s	RESISTOR, CHIP 3.3K
R12	1-218-957-11	s	RESISTOR,CHIP 2.2K 1/16W(1608)
R13	1-218-990-11	s	RESISTOR,CHIP 0 1/16W (1005)
R17	1-208-635-11	s	RESISTOR CHIP 10 1/16W (1005)
R18	1-208-635-11	s	RESISTOR CHIP 10 1/16W (1005)
R19	1-218-990-11	s	RESISTOR,CHIP 0 1/16W (1005)
R20	1-218-990-11	s	RESISTOR,CHIP 0 1/16W (1005)
R21	1-218-941-81	s	C-RES,V 100-1/16W J
R23	1-218-941-81	s	C-RES,V 100-1/16W J
R24	1-218-965-11	s	RESISTOR, CHIP 10K 1/16W
R25	1-218-965-11	s	RESISTOR, CHIP 10K 1/16W
R26	1-218-990-11	s	RESISTOR,CHIP 0 1/16W (1005)
R27	1-218-990-11	s	RESISTOR,CHIP 0 1/16W (1005)
R28	1-218-990-11	s	RESISTOR,CHIP 0 1/16W (1005)
R29	1-218-990-11	s	RESISTOR,CHIP 0 1/16W (1005)
R35	1-218-953-11	s	RESISTOR, CHIP 1K 1/16W
R69	1-208-683-11	s	RESISTOR CHIP 1K 1/16W (1005)
R70	1-208-667-11	s	RESISTOR CHIP 220 1/16W (1005)
R71	1-208-683-11	s	RESISTOR CHIP 1K 1/16W (1005)
R72	1-208-667-11	s	RESISTOR CHIP 220 1/16W (1005)
R77	1-218-990-11	s	RESISTOR,CHIP 0 1/16W (1005)
R78	1-218-961-11	s	RESISTOR, CHIP 4.7K 1/16W
R79	1-218-961-11	s	RESISTOR, CHIP 4.7K 1/16W
R80	1-208-715-11	s	RESISTOR,CHIP 22K 1/16W (1005)
R81	1-218-961-11	s	RESISTOR, CHIP 4.7K 1/16W
R83	1-218-962-11	s	RESISTOR,CHIP 5.6K 1/16W(1005)
R84	1-218-990-11	s	RESISTOR,CHIP 0 1/16W (1005)
R86	1-218-937-11	s	RESISTOR, CHIP 47
R87	1-218-937-11	s	RESISTOR, CHIP 47
R88	1-218-937-11	s	RESISTOR, CHIP 47
R89	1-218-953-11	s	RESISTOR, CHIP 1K 1/16W
R90	1-218-953-11	s	RESISTOR, CHIP 1K 1/16W
R91	1-218-965-11	s	RESISTOR, CHIP 10K 1/16W
R92	1-218-953-11	s	RESISTOR, CHIP 1K 1/16W
R93	1-218-990-11	s	RESISTOR,CHIP 0 1/16W (1005)
R95	1-218-953-11	s	RESISTOR, CHIP 1K 1/16W
R96	1-218-953-11	s	RESISTOR, CHIP 1K 1/16W
R97	1-218-953-11	s	RESISTOR, CHIP 1K 1/16W
R98	1-218-953-11	s	RESISTOR, CHIP 1K 1/16W
R99	1-218-953-11	s	RESISTOR, CHIP 1K 1/16W
R101	1-216-809-11	s	RESISTOR,CHIP 100 1/10W 1608
R102	1-216-809-11	s	RESISTOR,CHIP 100 1/10W 1608
R103	1-208-699-11	s	RESISTOR,CHIP 4.7K 1/16W(1005)
R104	1-218-990-11	s	RESISTOR,CHIP 0 1/16W (1005)
R105	1-218-990-11	s	RESISTOR,CHIP 0 1/16W (1005)
R106	1-218-941-81	s	C-RES,V 100-1/16W J
R107	1-216-809-11	s	RESISTOR,CHIP 100 1/10W 1608
R108	1-218-961-11	s	RESISTOR, CHIP 4.7K 1/16W
R109	1-216-809-11	s	RESISTOR,CHIP 100 1/10W 1608
R110	1-216-809-11	s	RESISTOR,CHIP 100 1/10W 1608
R111	1-218-961-11	s	RESISTOR, CHIP 4.7K 1/16W
R112	1-218-957-11	s	RESISTOR,CHIP 2.2K 1/16W(1608)
R113	1-218-957-11	s	RESISTOR,CHIP 2.2K 1/16W(1608)

(C BOARD)

Ref. No. or Q'ty	Part No.	SP	Description
R116	1-218-941-81	s	C-RES,V 100-1/16W J
R118	1-218-973-11	s	RESISTOR,CHIP 47K 1/16W (1005)
R119	1-218-941-81	s	C-RES,V 100-1/16W J
R120	1-218-965-11	s	RESISTOR, CHIP 10K 1/16W
R121	1-218-965-11	s	RESISTOR, CHIP 10K 1/16W
R122	1-218-961-11	s	RESISTOR, CHIP 4.7K 1/16W
R123	1-218-961-11	s	RESISTOR, CHIP 4.7K 1/16W
R124	1-218-961-11	s	RESISTOR, CHIP 4.7K 1/16W
R125	1-218-961-11	s	RESISTOR, CHIP 4.7K 1/16W
R126	1-218-941-81	s	C-RES,V 100-1/16W J
R129	1-218-965-11	s	RESISTOR, CHIP 10K 1/16W
R130	1-218-965-11	s	RESISTOR, CHIP 10K 1/16W
R131	1-218-965-11	s	RESISTOR, CHIP 10K 1/16W
R132	1-208-635-11	s	RESISTOR CHIP 10 1/16W (1005)
R133	1-218-945-11	s	RESISTOR,CHIP 220 1/16W(1005)
R134	1-218-965-11	s	RESISTOR, CHIP 10K 1/16W
R135	1-218-973-11	s	RESISTOR,CHIP 47K 1/16W (1005)
R136	1-218-965-11	s	RESISTOR, CHIP 10K 1/16W
R137	1-218-965-11	s	RESISTOR, CHIP 10K 1/16W
R138	1-218-965-11	s	RESISTOR, CHIP 10K 1/16W
R139	1-218-965-11	s	RESISTOR, CHIP 10K 1/16W
R140	1-218-973-11	s	RESISTOR,CHIP 47K 1/16W (1005)
R142	1-218-965-11	s	RESISTOR, CHIP 10K 1/16W
R143	1-218-973-11	s	RESISTOR,CHIP 47K 1/16W (1005)
R144	1-218-973-11	s	RESISTOR,CHIP 47K 1/16W (1005)
R145	1-218-965-11	s	RESISTOR, CHIP 10K 1/16W
R146	1-218-965-11	s	RESISTOR, CHIP 10K 1/16W
R147	1-218-953-11	s	RESISTOR, CHIP 1K 1/16W
R148	1-218-965-11	s	RESISTOR, CHIP 10K 1/16W
R149	1-218-971-11	s	RESISTOR,CHIP 33K 1/16W (1005)
R150	1-218-971-11	s	RESISTOR,CHIP 33K 1/16W (1005)
R151	1-218-941-81	s	C-RES,V 100-1/16W J
R152	1-218-941-81	s	C-RES,V 100-1/16W J
R153	1-218-965-11	s	RESISTOR, CHIP 10K 1/16W
R154	1-218-965-11	s	RESISTOR, CHIP 10K 1/16W
R155	1-218-965-11	s	RESISTOR, CHIP 10K 1/16W
R156	1-218-965-11	s	RESISTOR, CHIP 10K 1/16W
R157	1-218-965-11	s	RESISTOR, CHIP 10K 1/16W
R158	1-218-965-11	s	RESISTOR, CHIP 10K 1/16W
R159	1-218-965-11	s	RESISTOR, CHIP 10K 1/16W
R161	1-218-965-11	s	RESISTOR, CHIP 10K 1/16W
R162	1-218-965-11	s	RESISTOR, CHIP 10K 1/16W
R163	1-218-953-11	s	RESISTOR, CHIP 1K 1/16W
R164	1-218-953-11	s	RESISTOR, CHIP 1K 1/16W
R165	1-218-953-11	s	RESISTOR, CHIP 1K 1/16W
R166	1-218-953-11	s	RESISTOR, CHIP 1K 1/16W
R167	1-218-965-11	s	RESISTOR, CHIP 10K 1/16W
R168	1-218-965-11	s	RESISTOR, CHIP 10K 1/16W
R178	1-208-677-11	s	RESISTOR CHIP 560 1/16W (1005)
R179	1-208-677-11	s	RESISTOR CHIP 560 1/16W (1005)
R185	1-218-941-81	s	C-RES,V 100-1/16W J
R186	1-218-973-11	s	RESISTOR,CHIP 47K 1/16W (1005)
R187	1-218-941-81	s	C-RES,V 100-1/16W J
R188	1-218-973-11	s	RESISTOR,CHIP 47K 1/16W (1005)
R189	1-218-962-11	s	RESISTOR,CHIP 5.6K 1/16W(1005)
R190	1-218-941-81	s	C-RES,V 100-1/16W J
R191	1-218-941-81	s	C-RES,V 100-1/16W J
R192	1-218-941-81	s	C-RES,V 100-1/16W J
R195	1-218-965-11	s	RESISTOR, CHIP 10K 1/16W

(C BOARD)

Ref. No. or Q'ty	Part No.	SP	Description
R198	1-218-965-11	s	RESISTOR, CHIP 10K 1/16W
R199	1-218-941-81	s	C-RES,V 100-1/16W J
R202	1-218-937-11	s	RESISTOR, CHIP 47
R204	1-219-598-11	s	RESISTOR, CHIP 47K 1/16W(1005)
R205	1-208-711-11	s	RESISTOR CHIP 15K 1/16W (1005)
R206	1-208-683-11	s	RESISTOR CHIP 1K 1/16W (1005)
R251	1-208-635-11	s	RESISTOR CHIP 10 1/16W (1005)
R252	1-208-635-11	s	RESISTOR CHIP 10 1/16W (1005)
R253	1-208-635-11	s	RESISTOR CHIP 10 1/16W (1005)
R254	1-208-635-11	s	RESISTOR CHIP 10 1/16W (1005)
R255	1-208-635-11	s	RESISTOR CHIP 10 1/16W (1005)
R256	1-208-635-11	s	RESISTOR CHIP 10 1/16W (1005)
R260	1-218-965-11	s	RESISTOR, CHIP 10K 1/16W
R280	1-218-955-11	s	RESISTOR, CHIP 1.5K
R281	1-218-955-11	s	RESISTOR, CHIP 1.5K
R282	1-218-958-11	s	RESISTOR,CHIP 2.7K 1/16W(1005)
R283	1-218-958-11	s	RESISTOR,CHIP 2.7K 1/16W(1005)
R284	1-216-813-11	s	RESISTOR, CHIP 220 1/10W 1608
R285	1-216-813-11	s	RESISTOR, CHIP 220 1/10W 1608
R286	1-216-813-11	s	RESISTOR, CHIP 220 1/10W 1608
R287	1-216-813-11	s	RESISTOR, CHIP 220 1/10W 1608
R301	1-218-953-11	s	RESISTOR, CHIP 1K 1/16W
R302	1-218-955-11	s	RESISTOR, CHIP 1.5K
R303	1-218-949-11	s	RESISTOR,CHIP 470 1/16W
R304	1-218-941-81	s	C-RES,V 100-1/16W J
R305	1-218-965-11	s	RESISTOR, CHIP 10K 1/16W
R306	1-218-941-81	s	C-RES,V 100-1/16W J
R307	1-218-953-11	s	RESISTOR, CHIP 1K 1/16W
R308	1-218-953-11	s	RESISTOR, CHIP 1K 1/16W
R309	1-218-990-11	s	RESISTOR,CHIP 0 1/16W (1005)
R310	1-218-957-11	s	RESISTOR,CHIP 2.2K 1/16W(1608)
R311	1-218-961-11	s	RESISTOR, CHIP 4.7K 1/16W
R312	1-218-957-11	s	RESISTOR,CHIP 2.2K 1/16W(1608)
R313	1-208-677-11	s	RESISTOR CHIP 560 1/16W (1005)
R314	1-208-677-11	s	RESISTOR CHIP 560 1/16W (1005)
R315	1-218-949-11	s	RESISTOR,CHIP 470 1/16W
R316	1-218-949-11	s	RESISTOR,CHIP 470 1/16W
R317	1-218-953-11	s	RESISTOR, CHIP 1K 1/16W
R318	1-218-957-11	s	RESISTOR,CHIP 2.2K 1/16W(1608)
R319	1-218-957-11	s	RESISTOR,CHIP 2.2K 1/16W(1608)
R320	1-218-973-11	s	RESISTOR,CHIP 47K 1/16W (1005)
R321	1-218-981-11	s	RESISTOR CHIP 220K 1/16W(1005)
R322	1-218-941-81	s	C-RES,V 100-1/16W J
R324	1-218-945-11	s	RESISTOR,CHIP 220 1/16W(1005)
R325	1-208-701-11	s	RESISTOR CHIP 5.6K 1/16W(1005)
R326	1-208-701-11	s	RESISTOR CHIP 5.6K 1/16W(1005)
R327	1-218-957-11	s	RESISTOR,CHIP 2.2K 1/16W(1608)
R328	1-218-957-11	s	RESISTOR,CHIP 2.2K 1/16W(1608)
R329	1-208-675-11	s	RESISTOR CHIP 470 1/16W (1005)
R330	1-218-952-11	s	RESISTOR, CHIP 820
R331	1-208-683-11	s	RESISTOR CHIP 1K 1/16W (1005)
R332	1-208-651-11	s	RESISTOR CHIP 47 1/16W (1005)
R333	1-208-675-11	s	RESISTOR CHIP 470 1/16W (1005)
R334	1-208-675-11	s	RESISTOR CHIP 470 1/16W (1005)
R335	1-208-675-11	s	RESISTOR CHIP 470 1/16W (1005)
R336	1-218-990-11	s	RESISTOR,CHIP 0 1/16W (1005)
R337	1-208-701-11	s	RESISTOR CHIP 5.6K 1/16W(1005)
R338	1-208-691-11	s	RESISTOR CHIP 2.2K 1/16W(1005)
R339	1-218-952-11	s	RESISTOR, CHIP 820

(C BOARD)

Ref. No. or Q'ty	Part No.	SP	Description
R340	1-208-691-11	s	RESISTOR CHIP 2.2K 1/16W(1005)
R341	1-218-952-11	s	RESISTOR, CHIP 820
R342	1-218-971-11	s	RESISTOR,CHIP 33K 1/16W (1005)
R343	1-218-966-11	s	RESISTOR, CHIP 12K
R344	1-218-971-11	s	RESISTOR,CHIP 33K 1/16W (1005)
R345	1-218-966-11	s	RESISTOR, CHIP 12K
R346	1-218-953-11	s	RESISTOR, CHIP 1K 1/16W
R347	1-218-953-11	s	RESISTOR, CHIP 1K 1/16W
R348	1-208-663-11	s	RESISTOR CHIP 150 1/16W (1005)
R349	1-208-663-11	s	RESISTOR CHIP 150 1/16W (1005)
R350	1-208-677-11	s	RESISTOR CHIP 560 1/16W (1005)
R351	1-208-663-11	s	RESISTOR CHIP 150 1/16W (1005)
R352	1-208-663-11	s	RESISTOR CHIP 150 1/16W (1005)
R353	1-218-953-11	s	RESISTOR, CHIP 1K 1/16W
R354	1-218-941-81	s	C-RES,V 100-1/16W J
R355	1-218-973-11	s	RESISTOR,CHIP 47K 1/16W (1005)
R356	1-218-973-11	s	RESISTOR,CHIP 47K 1/16W (1005)
R359	1-211-975-11	s	RESISTOR,CHIP 18 1/10W (1608)
R360	1-211-975-11	s	RESISTOR,CHIP 18 1/10W (1608)
R361	1-218-990-11	s	RESISTOR,CHIP 0 1/16W (1005)
R362	1-218-990-11	s	RESISTOR,CHIP 0 1/16W (1005)
R366	1-218-990-11	s	RESISTOR,CHIP 0 1/16W (1005)
R367	1-211-975-11	s	RESISTOR,CHIP 18 1/10W (1608)
R368	1-211-975-11	s	RESISTOR,CHIP 18 1/10W (1608)
R369	1-211-975-11	s	RESISTOR,CHIP 18 1/10W (1608)
R371	1-218-990-11	s	RESISTOR,CHIP 0 1/16W (1005)
R372	1-211-987-11	s	RESISTOR,CHIP 56 1/10W (1608)
R373	1-211-987-11	s	RESISTOR,CHIP 56 1/10W (1608)
R374	1-211-987-11	s	RESISTOR,CHIP 56 1/10W (1608)
R375	1-211-987-11	s	RESISTOR,CHIP 56 1/10W (1608)
R376	1-211-987-11	s	RESISTOR,CHIP 56 1/10W (1608)
R382	1-218-990-11	s	RESISTOR,CHIP 0 1/16W (1005)
R383	1-218-990-11	s	RESISTOR,CHIP 0 1/16W (1005)
R384	1-218-990-11	s	RESISTOR,CHIP 0 1/16W (1005)
R385	1-211-975-11	s	RESISTOR,CHIP 18 1/10W (1608)
R386	1-211-975-11	s	RESISTOR,CHIP 18 1/10W (1608)
R387	1-211-975-11	s	RESISTOR,CHIP 18 1/10W (1608)
R388	1-218-961-11	s	RESISTOR, CHIP 4.7K 1/16W
R389	1-218-990-11	s	RESISTOR,CHIP 0 1/16W (1005)
R390	1-218-990-11	s	RESISTOR,CHIP 0 1/16W (1005)
R394	1-218-941-81	s	C-RES,V 100-1/16W J
R396	1-208-635-11	s	RESISTOR CHIP 10 1/16W (1005)
R397	1-218-941-81	s	C-RES,V 100-1/16W J
R398	1-218-941-81	s	C-RES,V 100-1/16W J
R399	1-218-957-11	s	RESISTOR,CHIP 2.2K 1/16W(1608)
R401	1-218-953-11	s	RESISTOR, CHIP 1K 1/16W
R402	1-218-937-11	s	RESISTOR, CHIP 47
R403	1-218-937-11	s	RESISTOR, CHIP 47
R404	1-218-953-11	s	RESISTOR, CHIP 1K 1/16W
R405	1-218-969-11	s	RESISTOR,CHIP 22K 1/16W (1608)
R406	1-218-969-11	s	RESISTOR,CHIP 22K 1/16W (1608)
R407	1-218-941-81	s	C-RES,V 100-1/16W J
R408	1-218-965-11	s	RESISTOR, CHIP 10K 1/16W
R409	1-218-965-11	s	RESISTOR, CHIP 10K 1/16W
R410	1-218-941-81	s	C-RES,V 100-1/16W J
R411	1-218-953-11	s	RESISTOR, CHIP 1K 1/16W
R412	1-218-949-11	s	RESISTOR,CHIP 470 1/16W
R413	1-218-979-11	s	RESISTOR, CHIP 150K
R414	1-218-978-11	s	RESISTOR,CHIP 120K 1/16W(1005)

(C BOARD)

Ref. No. or Q'ty	Part No.	SP	Description
R415	1-218-976-11	s	RESISTOR, CHIP 82K 1/16W(1005)
R416	1-218-937-11	s	RESISTOR, CHIP 47
R417	1-218-976-11	s	RESISTOR, CHIP 82K 1/16W(1005)
R418	1-218-977-11	s	RESISTOR,CHIP 100K 1/16W(1005)
R419	1-218-976-11	s	RESISTOR, CHIP 82K 1/16W(1005)
R420	1-218-973-11	s	RESISTOR,CHIP 47K 1/16W (1005)
R421	1-218-767-11	s	RESISTOR,CHIP 430K 1/10W(2012)
R422	1-218-973-11	s	RESISTOR,CHIP 47K 1/16W (1005)
R425	1-218-937-11	s	RESISTOR, CHIP 47
R426	1-218-961-11	s	RESISTOR, CHIP 4.7K 1/16W
R427	1-218-981-11	s	RESISTOR CHIP 220K 1/16W(1005)
R428	1-218-937-11	s	RESISTOR, CHIP 47
R429	1-208-695-11	s	RESISTOR CHIP 3.3K 1/16W(1005)
R430	1-208-707-11	s	RESISTOR,CHIP 10K 1/16W (1005)
R431	1-208-707-11	s	RESISTOR,CHIP 10K 1/16W (1005)
R432	1-218-937-11	s	RESISTOR, CHIP 47
R433	1-218-965-11	s	RESISTOR, CHIP 10K 1/16W
R434	1-218-953-11	s	RESISTOR, CHIP 1K 1/16W
R435	1-208-695-11	s	RESISTOR CHIP 3.3K 1/16W(1005)
R436	1-208-671-11	s	RESISTOR CHIP 330 1/16W (1005)
R437	1-208-699-11	s	RESISTOR,CHIP 4.7K 1/16W(1005)
R438	1-218-937-11	s	RESISTOR, CHIP 47
R439	1-218-961-11	s	RESISTOR, CHIP 4.7K 1/16W
R442	1-218-973-11	s	RESISTOR,CHIP 47K 1/16W (1005)
R443	1-208-701-11	s	RESISTOR CHIP 5.6K 1/16W(1005)
R444	1-208-691-11	s	RESISTOR CHIP 2.2K 1/16W(1005)
R446	1-218-959-11	s	RESISTOR, CHIP 3.3K
R448	1-218-945-11	s	RESISTOR,CHIP 220 1/16W(1005)
R449	1-218-937-11	s	RESISTOR, CHIP 47
R451	1-218-957-11	s	RESISTOR,CHIP 2.2K 1/16W(1608)
R453	1-218-953-11	s	RESISTOR, CHIP 1K 1/16W
R454	1-218-937-11	s	RESISTOR, CHIP 47
R455	1-218-957-11	s	RESISTOR,CHIP 2.2K 1/16W(1608)
R456	1-218-961-11	s	RESISTOR, CHIP 4.7K 1/16W
R458	1-218-990-11	s	RESISTOR,CHIP 0 1/16W (1005)
R459	1-218-990-11	s	RESISTOR,CHIP 0 1/16W (1005)
R461	1-218-977-11	s	RESISTOR,CHIP 100K 1/16W(1005)
R462	1-218-973-11	s	RESISTOR,CHIP 47K 1/16W (1005)
R471	1-218-937-11	s	RESISTOR, CHIP 47
R472	1-218-937-11	s	RESISTOR, CHIP 47
R473	1-218-937-11	s	RESISTOR, CHIP 47
R474	1-208-643-11	s	RESISTOR CHIP 22 1/16W (1005)
R475	1-208-643-11	s	RESISTOR CHIP 22 1/16W (1005)
R477	1-218-937-11	s	RESISTOR, CHIP 47
R478	1-218-937-11	s	RESISTOR, CHIP 47
R479	1-218-937-11	s	RESISTOR, CHIP 47
R480	1-218-937-11	s	RESISTOR, CHIP 47
R481	1-208-635-11	s	RESISTOR CHIP 10 1/16W (1005)
R482	1-218-937-11	s	RESISTOR, CHIP 47
R485	1-218-937-11	s	RESISTOR, CHIP 47
R487	1-218-937-11	s	RESISTOR, CHIP 47
R489	1-218-937-11	s	RESISTOR, CHIP 47
R491	1-218-937-11	s	RESISTOR, CHIP 47
R492	1-218-937-11	s	RESISTOR, CHIP 47
R493	1-208-695-11	s	RESISTOR CHIP 3.3K 1/16W(1005)
R494	1-218-937-11	s	RESISTOR, CHIP 47
R495	1-218-965-11	s	RESISTOR, CHIP 10K 1/16W
R497	1-218-937-11	s	RESISTOR, CHIP 47
R502	1-218-957-11	s	RESISTOR,CHIP 2.2K 1/16W(1608)

(C BOARD)

Ref. No. or Q'ty	Part No.	SP	Description
R503	1-218-937-11	s	RESISTOR, CHIP 47
R550	1-218-990-11	s	RESISTOR,CHIP 0 1/16W (1005)
R551	1-218-990-11	s	RESISTOR,CHIP 0 1/16W (1005)
R552	1-218-937-11	s	RESISTOR, CHIP 47
R553	1-208-643-11	s	RESISTOR CHIP 22 1/16W (1005)
R554	1-218-953-11	s	RESISTOR, CHIP 1K 1/16W
R555	1-208-643-11	s	RESISTOR CHIP 22 1/16W (1005)
R558	1-218-965-11	s	RESISTOR, CHIP 10K 1/16W
R559	1-218-965-11	s	RESISTOR, CHIP 10K 1/16W
R560	1-218-965-11	s	RESISTOR, CHIP 10K 1/16W
R561	1-218-965-11	s	RESISTOR, CHIP 10K 1/16W
R562	1-218-965-11	s	RESISTOR, CHIP 10K 1/16W
R563	1-218-965-11	s	RESISTOR, CHIP 10K 1/16W
R564	1-218-965-11	s	RESISTOR, CHIP 10K 1/16W
R565	1-218-965-11	s	RESISTOR, CHIP 10K 1/16W
R566	1-218-965-11	s	RESISTOR, CHIP 10K 1/16W
R567	1-218-965-11	s	RESISTOR, CHIP 10K 1/16W
R568	1-218-965-11	s	RESISTOR, CHIP 10K 1/16W
R569	1-218-965-11	s	RESISTOR, CHIP 10K 1/16W
R570	1-218-965-11	s	RESISTOR, CHIP 10K 1/16W
R571	1-218-965-11	s	RESISTOR, CHIP 10K 1/16W
R573	1-218-965-11	s	RESISTOR, CHIP 10K 1/16W
R575	1-218-965-11	s	RESISTOR, CHIP 10K 1/16W
R576	1-218-965-11	s	RESISTOR, CHIP 10K 1/16W
R579	1-218-965-11	s	RESISTOR, CHIP 10K 1/16W
R580	1-208-643-11	s	RESISTOR CHIP 22 1/16W (1005)
R581	1-218-941-81	s	C-RES,V 100-1/16W J
R583	1-218-965-11	s	RESISTOR, CHIP 10K 1/16W
R584	1-218-941-81	s	C-RES,V 100-1/16W J
R586	1-208-643-11	s	RESISTOR CHIP 22 1/16W (1005)
R587	1-208-643-11	s	RESISTOR CHIP 22 1/16W (1005)
R589	1-208-643-11	s	RESISTOR CHIP 22 1/16W (1005)
R590	1-218-937-11	s	RESISTOR, CHIP 47
R591	1-218-937-11	s	RESISTOR, CHIP 47
R592	1-218-990-11	s	RESISTOR,CHIP 0 1/16W (1005)
R593	1-218-990-11	s	RESISTOR,CHIP 0 1/16W (1005)
R596	1-218-937-11	s	RESISTOR, CHIP 47
R597	1-218-937-11	s	RESISTOR, CHIP 47
R601	1-218-965-11	s	RESISTOR, CHIP 10K 1/16W
R603	1-218-990-11	s	RESISTOR,CHIP 0 1/16W (1005)
R604	1-218-965-11	s	RESISTOR, CHIP 10K 1/16W
R605	1-218-965-11	s	RESISTOR, CHIP 10K 1/16W
R606	1-218-965-11	s	RESISTOR, CHIP 10K 1/16W
R607	1-218-965-11	s	RESISTOR, CHIP 10K 1/16W
R608	1-208-643-11	s	RESISTOR CHIP 22 1/16W (1005)
R609	1-208-643-11	s	RESISTOR CHIP 22 1/16W (1005)
R610	1-208-643-11	s	RESISTOR CHIP 22 1/16W (1005)
R611	1-208-643-11	s	RESISTOR CHIP 22 1/16W (1005)
R612	1-208-643-11	s	RESISTOR CHIP 22 1/16W (1005)
R613	1-218-990-11	s	RESISTOR,CHIP 0 1/16W (1005)
R615	1-218-965-11	s	RESISTOR, CHIP 10K 1/16W
R616	1-218-965-11	s	RESISTOR, CHIP 10K 1/16W
R617	1-218-965-11	s	RESISTOR, CHIP 10K 1/16W
R618	1-218-965-11	s	RESISTOR, CHIP 10K 1/16W
R652	1-218-965-11	s	RESISTOR, CHIP 10K 1/16W
R653	1-208-643-11	s	RESISTOR CHIP 22 1/16W (1005)
R655	1-208-643-11	s	RESISTOR CHIP 22 1/16W (1005)
R657	1-208-643-11	s	RESISTOR CHIP 22 1/16W (1005)
R658	1-208-643-11	s	RESISTOR CHIP 22 1/16W (1005)

(C BOARD)

Ref. No. or Q'ty	Part No.	SP	Description
R659	1-218-953-11	s	RESISTOR, CHIP 1K 1/16W
R660	1-218-953-11	s	RESISTOR, CHIP 1K 1/16W
R661	1-208-643-11	s	RESISTOR CHIP 22 1/16W (1005)
R665	1-218-965-11	s	RESISTOR, CHIP 10K 1/16W
R666	1-218-941-81	s	C-RES,V 100-1/16W J
R667	1-218-941-81	s	C-RES,V 100-1/16W J
R672	1-218-941-81	s	C-RES,V 100-1/16W J
R673	1-218-965-11	s	RESISTOR, CHIP 10K 1/16W
R674	1-218-961-11	s	RESISTOR, CHIP 4.7K 1/16W
R675	1-218-941-81	s	C-RES,V 100-1/16W J
R676	1-218-961-11	s	RESISTOR, CHIP 4.7K 1/16W
R677	1-218-953-11	s	RESISTOR, CHIP 1K 1/16W
R679	1-218-961-11	s	RESISTOR, CHIP 4.7K 1/16W
R680	1-208-643-11	s	RESISTOR CHIP 22 1/16W (1005)
R681	1-208-643-11	s	RESISTOR CHIP 22 1/16W (1005)
R682	1-218-977-11	s	RESISTOR,CHIP 100K 1/16W(1005)
R685	1-218-941-81	s	C-RES,V 100-1/16W J
R688	1-218-961-11	s	RESISTOR, CHIP 4.7K 1/16W
R689	1-218-990-11	s	RESISTOR,CHIP 0 1/16W (1005)
R690	1-218-990-11	s	RESISTOR,CHIP 0 1/16W (1005)
R691	1-218-990-11	s	RESISTOR,CHIP 0 1/16W (1005)
R692	1-218-965-11	s	RESISTOR, CHIP 10K 1/16W
R695	1-218-957-11	s	RESISTOR,CHIP 2.2K 1/16W(1608)
R696	1-208-643-11	s	RESISTOR CHIP 22 1/16W (1005)
R697	1-208-643-11	s	RESISTOR CHIP 22 1/16W (1005)
R698	1-208-643-11	s	RESISTOR CHIP 22 1/16W (1005)
R701	1-218-965-11	s	RESISTOR, CHIP 10K 1/16W
R702	1-218-965-11	s	RESISTOR, CHIP 10K 1/16W
R703	1-218-937-11	s	RESISTOR, CHIP 47
R704	1-218-937-11	s	RESISTOR, CHIP 47
R705	1-218-937-11	s	RESISTOR, CHIP 47
R706	1-218-937-11	s	RESISTOR, CHIP 47
R707	1-218-941-81	s	C-RES,V 100-1/16W J
R708	1-218-941-81	s	C-RES,V 100-1/16W J
R709	1-218-941-81	s	C-RES,V 100-1/16W J
R710	1-218-941-81	s	C-RES,V 100-1/16W J
R711	1-218-941-81	s	C-RES,V 100-1/16W J
R712	1-218-941-81	s	C-RES,V 100-1/16W J
R713	1-218-937-11	s	RESISTOR, CHIP 47
R714	1-218-937-11	s	RESISTOR, CHIP 47
R715	1-218-990-11	s	RESISTOR,CHIP 0 1/16W (1005)
R717	1-218-965-11	s	RESISTOR, CHIP 10K 1/16W
R718	1-218-973-11	s	RESISTOR,CHIP 47K 1/16W (1005)
R719	1-218-937-11	s	RESISTOR, CHIP 47
R720	1-218-937-11	s	RESISTOR, CHIP 47
R721	1-218-937-11	s	RESISTOR, CHIP 47
R722	1-218-953-11	s	RESISTOR, CHIP 1K 1/16W
R723	1-218-965-11	s	RESISTOR, CHIP 10K 1/16W
R724	1-218-961-11	s	RESISTOR, CHIP 4.7K 1/16W
R725	1-218-961-11	s	RESISTOR, CHIP 4.7K 1/16W
R726	1-218-941-81	s	C-RES,V 100-1/16W J
R727	1-218-941-81	s	C-RES,V 100-1/16W J
R728	1-218-941-81	s	C-RES,V 100-1/16W J
R729	1-218-941-81	s	C-RES,V 100-1/16W J
R731	1-218-941-81	s	C-RES,V 100-1/16W J
R732	1-218-957-11	s	RESISTOR,CHIP 2.2K 1/16W(1608)
R738	1-218-961-11	s	RESISTOR, CHIP 4.7K 1/16W
R739	1-218-961-11	s	RESISTOR, CHIP 4.7K 1/16W
R740	1-218-973-11	s	RESISTOR,CHIP 47K 1/16W (1005)

(C BOARD)

Ref. No. or Q'ty	Part No.	SP	Description
R741	1-218-973-11	s	RESISTOR,CHIP 47K 1/16W (1005)
R751	1-218-941-81	s	C-RES,V 100-1/16W J
R752	1-218-957-11	s	RESISTOR,CHIP 2.2K 1/16W(1608)
R753	1-218-957-11	s	RESISTOR,CHIP 2.2K 1/16W(1608)
R754	1-208-635-11	s	RESISTOR CHIP 10 1/16W (1005)
R755	1-208-635-11	s	RESISTOR CHIP 10 1/16W (1005)
R756	1-218-990-11	s	RESISTOR,CHIP 0 1/16W (1005)
R757	1-208-707-11	s	RESISTOR,CHIP 10K 1/16W (1005)
R758	1-219-606-11	s	RESISTOR,CHIP 100K 1/16W(1005)
R761	1-218-965-11	s	RESISTOR, CHIP 10K 1/16W
R762	1-218-965-11	s	RESISTOR, CHIP 10K 1/16W
R767	1-218-965-11	s	RESISTOR, CHIP 10K 1/16W
R801	1-218-941-81	s	C-RES,V 100-1/16W J
R802	1-218-957-11	s	RESISTOR,CHIP 2.2K 1/16W(1608)
R803	1-218-957-11	s	RESISTOR,CHIP 2.2K 1/16W(1608)
R804	1-208-635-11	s	RESISTOR CHIP 10 1/16W (1005)
R805	1-208-635-11	s	RESISTOR CHIP 10 1/16W (1005)
R806	1-218-990-11	s	RESISTOR,CHIP 0 1/16W (1005)
R811	1-218-965-11	s	RESISTOR, CHIP 10K 1/16W
R812	1-218-965-11	s	RESISTOR, CHIP 10K 1/16W
R817	1-218-965-11	s	RESISTOR, CHIP 10K 1/16W
R851	1-218-941-81	s	C-RES,V 100-1/16W J
R852	1-218-957-11	s	RESISTOR,CHIP 2.2K 1/16W(1608)
R853	1-218-957-11	s	RESISTOR,CHIP 2.2K 1/16W(1608)
R854	1-208-635-11	s	RESISTOR CHIP 10 1/16W (1005)
R855	1-208-635-11	s	RESISTOR CHIP 10 1/16W (1005)
R856	1-218-990-11	s	RESISTOR,CHIP 0 1/16W (1005)
R861	1-218-965-11	s	RESISTOR, CHIP 10K 1/16W
R862	1-218-965-11	s	RESISTOR, CHIP 10K 1/16W
R867	1-218-965-11	s	RESISTOR, CHIP 10K 1/16W
R902	1-218-965-11	s	RESISTOR, CHIP 10K 1/16W
R903	1-218-990-11	s	RESISTOR,CHIP 0 1/16W (1005)
R904	1-218-978-11	s	RESISTOR,CHIP 120K 1/16W(1005)
R905	1-218-990-11	s	RESISTOR,CHIP 0 1/16W (1005)
R907	1-218-965-11	s	RESISTOR, CHIP 10K 1/16W
R908	1-218-978-11	s	RESISTOR,CHIP 120K 1/16W(1005)
R909	1-218-989-11	s	RESISTOR,CHIP 1M 1/16W (1005)
R948	1-208-656-81	s	RESISTOR, METAL CHIP75(1005)
R949	1-218-989-11	s	RESISTOR,CHIP 1M 1/16W (1005)
R950	1-218-962-11	s	RESISTOR,CHIP 5.6K 1/16W(1005)
R951	1-218-962-11	s	RESISTOR,CHIP 5.6K 1/16W(1005)
R952	1-218-962-11	s	RESISTOR,CHIP 5.6K 1/16W(1005)
R953	1-218-965-11	s	RESISTOR, CHIP 10K 1/16W
R954	1-218-965-11	s	RESISTOR, CHIP 10K 1/16W
R955	1-218-957-11	s	RESISTOR,CHIP 2.2K 1/16W(1608)
R956	1-218-965-11	s	RESISTOR, CHIP 10K 1/16W
R957	1-218-973-11	s	RESISTOR,CHIP 47K 1/16W (1005)
R958	1-218-973-11	s	RESISTOR,CHIP 47K 1/16W (1005)
R959	1-218-973-11	s	RESISTOR,CHIP 47K 1/16W (1005)
R960	1-218-953-11	s	RESISTOR, CHIP 1K 1/16W
R961	1-218-973-11	s	RESISTOR,CHIP 47K 1/16W (1005)
R962	1-218-961-11	s	RESISTOR, CHIP 4.7K 1/16W
R963	1-218-953-11	s	RESISTOR, CHIP 1K 1/16W
R964	1-218-957-11	s	RESISTOR,CHIP 2.2K 1/16W(1608)
R981	1-218-969-11	s	RESISTOR,CHIP 22K 1/16W (1608)
R982	1-218-969-11	s	RESISTOR,CHIP 22K 1/16W (1608)
R984	1-218-965-11	s	RESISTOR, CHIP 10K 1/16W
R985	1-218-965-11	s	RESISTOR, CHIP 10K 1/16W
R986	1-218-953-11	s	RESISTOR, CHIP 1K 1/16W

(C BOARD)

Ref. No. or Q'ty	Part No.	SP	Description
R987	1-218-953-11	s	RESISTOR, CHIP 1K 1/16W
RB101	1-234-372-11	s	RES, NETWORK 100X4 (1005)
RB102	1-234-372-11	s	RES, NETWORK 100X4 (1005)
RB103	1-234-372-11	s	RES, NETWORK 100X4 (1005)
RB104	1-234-375-21	s	RES, NETWORK 1KX4 (1005)
RB105	1-234-378-11	s	RES, NETWORK 10KX4 (1005)
RB106	1-234-372-11	s	RES, NETWORK 100X4 (1005)
RB107	1-234-372-11	s	RES, NETWORK 100X4 (1005)
RB109	1-234-372-11	s	RES, NETWORK 100X4 (1005)
RB111	1-234-372-11	s	RES, NETWORK 100X4 (1005)
RB112	1-234-372-11	s	RES, NETWORK 100X4 (1005)
RB113	1-234-372-11	s	RES, NETWORK 100X4 (1005)
RB114	1-234-372-11	s	RES, NETWORK 100X4 (1005)
RB116	1-234-372-11	s	RES, NETWORK 100X4 (1005)
RB117	1-234-372-11	s	RES, NETWORK 100X4 (1005)
RB118	1-234-372-11	s	RES, NETWORK 100X4 (1005)
RB120	1-234-372-11	s	RES, NETWORK 100X4 (1005)
RB351	1-234-369-21	s	RES, NETWORK 10X4 (1005)
RB352	1-234-369-21	s	RES, NETWORK 10X4 (1005)
RB353	1-234-369-21	s	RES, NETWORK 10X4 (1005)
RB354	1-234-369-21	s	RES, NETWORK 10X4 (1005)
RB451	1-234-372-11	s	RES, NETWORK 100X4 (1005)
RB452	1-234-372-11	s	RES, NETWORK 100X4 (1005)
RB453	1-234-372-11	s	RES, NETWORK 100X4 (1005)
RB454	1-234-372-11	s	RES, NETWORK 100X4 (1005)
RB455	1-234-372-11	s	RES, NETWORK 100X4 (1005)
RB456	1-234-372-11	s	RES, NETWORK 100X4 (1005)
RB457	1-234-372-11	s	RES, NETWORK 100X4 (1005)
RB458	1-234-372-11	s	RES, NETWORK 100X4 (1005)
RB459	1-234-372-11	s	RES, NETWORK 100X4 (1005)
RB460	1-234-372-11	s	RES, NETWORK 100X4 (1005)
RB461	1-234-372-11	s	RES, NETWORK 100X4 (1005)
RB462	1-234-372-11	s	RES, NETWORK 100X4 (1005)
RB501	1-234-369-21	s	RES, NETWORK 10X4 (1005)
RB502	1-234-369-21	s	RES, NETWORK 10X4 (1005)
RB503	1-234-369-21	s	RES, NETWORK 10X4 (1005)
RB504	1-234-369-21	s	RES, NETWORK 10X4 (1005)
RB505	1-234-369-21	s	RES, NETWORK 10X4 (1005)
RB506	1-234-369-21	s	RES, NETWORK 10X4 (1005)
RB507	1-234-369-21	s	RES, NETWORK 10X4 (1005)
RB508	1-234-369-21	s	RES, NETWORK 10X4 (1005)
RB509	1-234-369-21	s	RES, NETWORK 10X4 (1005)
RB510	1-234-369-21	s	RES, NETWORK 10X4 (1005)
RB511	1-234-369-21	s	RES, NETWORK 10X4 (1005)
RB512	1-234-369-21	s	RES, NETWORK 10X4 (1005)
RB513	1-234-369-21	s	RES, NETWORK 10X4 (1005)
RB514	1-234-371-11	s	RES, NETWORK 47X4 (1005)
RB515	1-234-371-11	s	RES, NETWORK 47X4 (1005)
RB516	1-234-371-11	s	RES, NETWORK 47X4 (1005)
RB517	1-234-371-11	s	RES, NETWORK 47X4 (1005)
RB518	1-234-371-11	s	RES, NETWORK 47X4 (1005)
RB519	1-234-371-11	s	RES, NETWORK 47X4 (1005)
RB520	1-234-371-11	s	RES, NETWORK 47X4 (1005)
RB521	1-234-371-11	s	RES, NETWORK 47X4 (1005)
RB522	1-234-371-11	s	RES, NETWORK 47X4 (1005)
RB523	1-234-371-11	s	RES, NETWORK 47X4 (1005)
RB524	1-234-371-11	s	RES, NETWORK 47X4 (1005)
RB525	1-234-371-11	s	RES, NETWORK 47X4 (1005)

(C BOARD)

Ref. No. or Q'ty	Part No.	SP	Description	
RB526	1-234-371-11	s	RES, NETWORK 47X4	(1005)
RB550	1-234-369-21	s	RES, NETWORK 10X4	(1005)
RB551	1-234-369-21	s	RES, NETWORK 10X4	(1005)
RB552	1-234-369-21	s	RES, NETWORK 10X4	(1005)
RB553	1-234-369-21	s	RES, NETWORK 10X4	(1005)
RB554	1-234-369-21	s	RES, NETWORK 10X4	(1005)
RB555	1-234-369-21	s	RES, NETWORK 10X4	(1005)
RB556	1-234-369-21	s	RES, NETWORK 10X4	(1005)
RB557	1-234-369-21	s	RES, NETWORK 10X4	(1005)
RB558	1-234-369-21	s	RES, NETWORK 10X4	(1005)
RB559	1-234-369-21	s	RES, NETWORK 10X4	(1005)
RB560	1-234-369-21	s	RES, NETWORK 10X4	(1005)
RB561	1-234-369-21	s	RES, NETWORK 10X4	(1005)
RB603	1-234-371-11	s	RES, NETWORK 47X4	(1005)
RB604	1-234-371-11	s	RES, NETWORK 47X4	(1005)
RB605	1-234-371-11	s	RES, NETWORK 47X4	(1005)
RB606	1-234-371-11	s	RES, NETWORK 47X4	(1005)
RB607	1-234-371-11	s	RES, NETWORK 47X4	(1005)
RB608	1-234-371-11	s	RES, NETWORK 47X4	(1005)
RB609	1-234-371-11	s	RES, NETWORK 47X4	(1005)
RB610	1-234-371-11	s	RES, NETWORK 47X4	(1005)
RB611	1-234-371-11	s	RES, NETWORK 47X4	(1005)
RB612	1-234-371-11	s	RES, NETWORK 47X4	(1005)
RB613	1-234-371-11	s	RES, NETWORK 47X4	(1005)
RB614	1-234-371-11	s	RES, NETWORK 47X4	(1005)
RB615	1-234-378-11	s	RES, NETWORK 10KX4	(1005)
RB616	1-234-378-11	s	RES, NETWORK 10KX4	(1005)
RB617	1-234-378-11	s	RES, NETWORK 10KX4	(1005)
RB618	1-234-378-11	s	RES, NETWORK 10KX4	(1005)
RB651	1-234-369-21	s	RES, NETWORK 10X4	(1005)
RB652	1-234-369-21	s	RES, NETWORK 10X4	(1005)
RB653	1-234-369-21	s	RES, NETWORK 10X4	(1005)
RB654	1-234-369-21	s	RES, NETWORK 10X4	(1005)
RB655	1-234-369-21	s	RES, NETWORK 10X4	(1005)
RB656	1-234-369-21	s	RES, NETWORK 10X4	(1005)
RB701	1-234-372-11	s	RES, NETWORK 100X4	(1005)
RB702	1-234-372-11	s	RES, NETWORK 100X4	(1005)
RB703	1-234-372-11	s	RES, NETWORK 100X4	(1005)
RB704	1-234-372-11	s	RES, NETWORK 100X4	(1005)
RB705	1-234-372-11	s	RES, NETWORK 100X4	(1005)
RB706	1-234-372-11	s	RES, NETWORK 100X4	(1005)
RB707	1-234-372-11	s	RES, NETWORK 100X4	(1005)
RB708	1-234-372-11	s	RES, NETWORK 100X4	(1005)
RB709	1-234-372-11	s	RES, NETWORK 100X4	(1005)
RB710	1-234-371-11	s	RES, NETWORK 47X4	(1005)
RB711	1-234-371-11	s	RES, NETWORK 47X4	(1005)
RB712	1-234-371-11	s	RES, NETWORK 47X4	(1005)
RB713	1-234-371-11	s	RES, NETWORK 47X4	(1005)
RB714	1-234-371-11	s	RES, NETWORK 47X4	(1005)
RB715	1-234-371-11	s	RES, NETWORK 47X4	(1005)
RB716	1-234-371-11	s	RES, NETWORK 47X4	(1005)
RB717	1-234-371-11	s	RES, NETWORK 47X4	(1005)
RB718	1-234-371-11	s	RES, NETWORK 47X4	(1005)
RB751	1-234-523-21	s	RESISTOR,CHIP NETWORK	
RB752	1-234-523-21	s	RESISTOR,CHIP NETWORK	
RB801	1-234-523-21	s	RESISTOR,CHIP NETWORK	
RB802	1-234-523-21	s	RESISTOR,CHIP NETWORK	
RB851	1-234-523-21	s	RESISTOR,CHIP NETWORK	
RB852	1-234-523-21	s	RESISTOR,CHIP NETWORK	

(C BOARD)

Ref. No. or Q'ty	Part No.	SP	Description
S701	1-771-337-21	s	SWITCH, SLIDE
S981	1-771-337-21	s	SWITCH, SLIDE
TH101	1-803-382-11	s	THERMISTOR (10K)
TP101	1-535-757-11	s	CHIP, CHECKER (CONNECTOR)
TP102	1-535-757-11	s	CHIP, CHECKER (CONNECTOR)
TP103	1-535-757-11	s	CHIP, CHECKER (CONNECTOR)
TP202	1-535-757-11	s	CHIP, CHECKER (CONNECTOR)
TP203	1-535-757-11	s	CHIP, CHECKER (CONNECTOR)
TP204	1-535-757-11	s	CHIP, CHECKER (CONNECTOR)
TP205	1-535-757-11	s	CHIP, CHECKER (CONNECTOR)
TP206	1-535-757-11	s	CHIP, CHECKER (CONNECTOR)
TP207	1-535-757-11	s	CHIP, CHECKER (CONNECTOR)
TP208	1-535-757-11	s	CHIP, CHECKER (CONNECTOR)
TP209	1-535-757-11	s	CHIP, CHECKER (CONNECTOR)
TP210	1-535-757-11	s	CHIP, CHECKER (CONNECTOR)
TP211	1-535-757-11	s	CHIP, CHECKER (CONNECTOR)
TP212	1-535-757-11	s	CHIP, CHECKER (CONNECTOR)
TP213	1-535-757-11	s	CHIP, CHECKER (CONNECTOR)
TP214	1-535-757-11	s	CHIP, CHECKER (CONNECTOR)
TP215	1-535-757-11	s	CHIP, CHECKER (CONNECTOR)
TP216	1-535-757-11	s	CHIP, CHECKER (CONNECTOR)
TP217	1-535-757-11	s	CHIP, CHECKER (CONNECTOR)
TP301	1-535-757-11	s	CHIP, CHECKER (CONNECTOR)
TP302	1-535-757-11	s	CHIP, CHECKER (CONNECTOR)
TP303	1-535-757-11	s	CHIP, CHECKER (CONNECTOR)
TP304	1-535-757-11	s	CHIP, CHECKER (CONNECTOR)
TP401	1-535-757-11	s	CHIP, CHECKER (CONNECTOR)
TP402	1-535-757-11	s	CHIP, CHECKER (CONNECTOR)
TP403	1-535-757-11	s	CHIP, CHECKER (CONNECTOR)
TP404	1-535-757-11	s	CHIP, CHECKER (CONNECTOR)
TP405	1-535-757-11	s	CHIP, CHECKER (CONNECTOR)
TP406	1-535-757-11	s	CHIP, CHECKER (CONNECTOR)
TP407	1-535-757-11	s	CHIP, CHECKER (CONNECTOR)
TP408	1-535-757-11	s	CHIP, CHECKER (CONNECTOR)
TP409	1-535-757-11	s	CHIP, CHECKER (CONNECTOR)
TP550	1-535-757-11	s	CHIP, CHECKER (CONNECTOR)
TP601	1-535-757-11	s	CHIP, CHECKER (CONNECTOR)
TP602	1-535-757-11	s	CHIP, CHECKER (CONNECTOR)
TP603	1-535-757-11	s	CHIP, CHECKER (CONNECTOR)
TP604	1-535-757-11	s	CHIP, CHECKER (CONNECTOR)
TP605	1-535-757-11	s	CHIP, CHECKER (CONNECTOR)
TP651	1-535-757-11	s	CHIP, CHECKER (CONNECTOR)
TP652	1-535-757-11	s	CHIP, CHECKER (CONNECTOR)
TP653	1-535-757-11	s	CHIP, CHECKER (CONNECTOR)
TP701	1-535-757-11	s	CHIP, CHECKER (CONNECTOR)
TP702	1-535-757-11	s	CHIP, CHECKER (CONNECTOR)
TP703	1-535-757-11	s	CHIP, CHECKER (CONNECTOR)
TP704	1-535-757-11	s	CHIP, CHECKER (CONNECTOR)
TP705	1-535-757-11	s	CHIP, CHECKER (CONNECTOR)
TP706	1-535-757-11	s	CHIP, CHECKER (CONNECTOR)
TP707	1-535-757-11	s	CHIP, CHECKER (CONNECTOR)
TP708	1-535-757-11	s	CHIP, CHECKER (CONNECTOR)
TP709	1-535-757-11	s	CHIP, CHECKER (CONNECTOR)
TP710	1-535-757-11	s	CHIP, CHECKER (CONNECTOR)
TP711	1-535-757-11	s	CHIP, CHECKER (CONNECTOR)
TP712	1-535-757-11	s	CHIP, CHECKER (CONNECTOR)
TP713	1-535-757-11	s	CHIP, CHECKER (CONNECTOR)
TP751	1-535-757-11	s	CHIP, CHECKER (CONNECTOR)

(C BOARD)

Ref. No. or Q'ty	Part No.	SP	Description
TP752	1-535-757-11	s	CHIP, CHECKER (CONNECTOR)
TP753	1-535-757-11	s	CHIP, CHECKER (CONNECTOR)
TP754	1-535-757-11	s	CHIP, CHECKER (CONNECTOR)
TP755	1-535-757-11	s	CHIP, CHECKER (CONNECTOR)
TP801	1-535-757-11	s	CHIP, CHECKER (CONNECTOR)
TP802	1-535-757-11	s	CHIP, CHECKER (CONNECTOR)
TP851	1-535-757-11	s	CHIP, CHECKER (CONNECTOR)
TP852	1-535-757-11	s	CHIP, CHECKER (CONNECTOR)
TP951	1-535-757-11	s	CHIP, CHECKER (CONNECTOR)
X101	1-795-650-21	s	VIBRATOR, CRYSTAL(16.384MHz)
X301	1-760-273-11	s	VIBRATOR, CRYSTAL(20MHz)
X351	1-795-219-21	s	VIBRATOR, CRYSTAL(24.576MHz)
X550	1-781-544-11	s	VIBRATOR, CERAMIC(40MHz)
X651	1-795-650-21	s	VIBRATOR, CRYSTAL(16.384MHz)
X932	1-781-994-21	s	VIBRATOR, CRYSTAL(24MHz)

F BOARD

Ref. No. or Q'ty	Part No.	SP	Description
1pc	⚠ A-1401-531-A	s	MOUNTED CIRCUIT BOARD, F
C501	⚠ 1-107-533-11	s	CAPACITOR FILM 1MF/250VAC
C502	⚠ 1-165-530-11	s	CAPACITOR,FILM(ACROSS)0.47MF
C503	⚠ 1-113-912-11	s	CAPACITOR,CERAMIC .0047MF/250V
C504	⚠ 1-113-912-11	s	CAPACITOR,CERAMIC .0047MF/250V
CN501	⚠ 1-691-961-11	o	PIN, CONNECTOR (PC BOARD) 2P
CN502	⚠ 1-691-960-21	o	PIN, CONNECTOR (PC BOARD) 3P
F501	⚠ 1-576-233-11	s	FUSE (H.B.C.) 6.3A/250V
FH501	1-533-223-11	s	CLIP,FUSE
FH502	1-533-223-11	s	CLIP,FUSE
L501	⚠ 1-421-944-31	s	TRANSFORMER,LINE FILTER
R501	⚠ 1-202-847-00	s	RESISTOR,SOLID 560K 1/2W
VD501	⚠ 1-801-268-51	s	VARISTOR ERZV14D471

GA BOARD

Ref. No. or Q'ty	Part No.	SP	Description
1pc	⚠ A-1300-751-A	s	MOUNTED CIRCUIT BOARD, GA
1pc	4-034-094-01	s	SHEET, INSULATE (PLA)
3pcs	7-682-649-09	s	SCREW +PS 3X10(EP-FE/ZNBK/CM2)
C402	1-117-228-11	s	CAPACITOR,FILM 2.2MF/450V
C403	1-117-228-11	s	CAPACITOR,FILM 2.2MF/450V
C404	1-162-970-11	s	CAPACITOR CERAMIC 0.01MF/25V B
C405	1-162-970-11	s	CAPACITOR CERAMIC 0.01MF/25V B
C406	1-131-992-11	s	CAP, CERAMIC 100000PF F 1608
C407	1-107-910-11	s	CAPACITOR,ELECT 100MF/50V
C408	1-115-416-11	s	CAPACITOR,CERAMIC 1000PF/25V
C409	⚠ 1-117-752-11	s	CAPACITOR, ELECT 330MF/450V
C410	⚠ 1-117-752-11	s	CAPACITOR, ELECT 330MF/450V
C411	1-127-715-11	s	CAPACITOR,CERAMIC 0.22MF B1608
C412	1-162-970-11	s	CAPACITOR CERAMIC 0.01MF/25V B
C413	1-115-416-11	s	CAPACITOR,CERAMIC 1000PF/25V
C414	1-101-821-00	s	CAPACITOR,CERAMIC 0.002MF/500V
CN401	⚠ 1-691-960-11	o	PIN,CONNECTOR (PC BOARD) 3P
CN402	⚠ 1-691-960-11	o	PIN,CONNECTOR (PC BOARD) 3P
CN403	⚠ 1-691-960-21	o	PIN, CONNECTOR (PC BOARD) 3P
CN404	1-794-509-11	s	PIN, CONNECTOR (PC BOARD) (3P)
D401	8-719-055-30	s	DIODE D1FS4A-TA
D402	8-719-037-33	s	DIODE RD16SB-T1
D403	⚠ 6-500-406-01	s	DIODE D10XB80
D404	8-719-073-01	s	DIODE MA111-(K8).S0
D405	8-719-304-63	s	DIODE RM11C (RECTI)
D406	8-719-079-02	s	DIODE SF20L60U
D407	8-719-037-53	s	DIODE RD27SB-T1
D408	8-719-073-52	s	DIODE D2FS6-TA
D409	8-719-055-30	s	DIODE D1FS4A-TA
D410	8-719-037-53	s	DIODE RD27SB-T1
D411	8-719-055-30	s	DIODE D1FS4A-TA
IC401	8-759-641-00	s	IC MC33262DR2
L401	⚠ 1-419-989-02	s	COIL, CHOKE 2830UH
L402	⚠ 1-456-173-21	s	COIL, CHOKE 250UH
Q401	8-729-230-27	s	TRANSISTOR 2SA1213Y-TE12L
Q402	8-729-230-49	s	TRANSISTOR 2SC2712-YG
Q403	8-729-230-27	s	TRANSISTOR 2SA1213Y-TE12L
Q404	8-729-230-49	s	TRANSISTOR 2SC2712-YG
Q405	8-729-807-51	s	TRANSISTOR 2SD1623-S
Q406	8-729-230-27	s	TRANSISTOR 2SA1213Y-TE12L
Q407	6-550-366-01	s	TRANSISTOR SPW47N60C3
R401	⚠ 1-217-786-11	s	RESISTOR, CEMENT 22/5W (FUSE)
R402	1-220-269-11	s	RESISTOR, CHIP 330 1/2W (4532)
R403	1-220-269-11	s	RESISTOR, CHIP 330 1/2W (4532)
R404	1-216-828-11	s	RESISTOR, CHIP 3.9K 1/10W 1608
R405	1-216-829-11	s	RESISTOR,CHIP 4.7K 1/10W(1608)
R406	1-216-841-11	s	RESISTOR, CHIP 47K 1/10W 1608
R407	1-216-833-11	s	RESISTOR,CHIP 10K 1/10W (1608)
R408	1-216-809-11	s	RESISTOR,CHIP 100 1/10W 1608
R409	1-249-389-11	s	RES,CARBON 4.7 1/4W
R410	1-216-833-11	s	RESISTOR,CHIP 10K 1/10W (1608)
R411	1-216-833-11	s	RESISTOR,CHIP 10K 1/10W (1608)
R412	1-216-833-11	s	RESISTOR,CHIP 10K 1/10W (1608)
R413	1-216-833-11	s	RESISTOR,CHIP 10K 1/10W (1608)
R414	1-218-899-11	s	RESISTOR,CHIP 150K 1/10W(1608)
R415	1-218-899-11	s	RESISTOR,CHIP 150K 1/10W(1608)

(GA BOARD)

Ref. No. or Q'ty	Part No.	SP	Description
R416	1-218-899-11	s	RESISTOR,CHIP 150K 1/10W(1608)
R417	1-218-902-11	s	RESISTOR,CHIP 200K 1/10W(1608)
R418	1-218-902-11	s	RESISTOR,CHIP 200K 1/10W(1608)
R419	1-218-903-11	s	RESISTOR,CHIP 220K 1/10W(1608)
R420	1-218-903-11	s	RESISTOR,CHIP 220K 1/10W(1608)
R421	1-218-877-11	s	RESISTOR,CHIP 18K 1/10W (1608)
R422	1-249-393-11	s	RES,CARBON 10 1/4W
R423	1-249-393-11	s	RES,CARBON 10 1/4W
R424	1-216-833-11	s	RESISTOR,CHIP 10K 1/10W (1608)
R425	1-219-738-11	s	RES, 0.08 (RESISTOR, METAL)
R426	1-218-644-11	s	RESISTOR,CHIP 10 1/16W
R428	1-218-644-11	s	RESISTOR,CHIP 10 1/16W
R429	1-216-833-11	s	RESISTOR,CHIP 10K 1/10W (1608)
R430	1-216-864-11	s	CONDUCTOR, CHIP (1608)
R431	1-216-837-11	s	RESISTOR,CHIP 22K 1/16W 1608
R432	1-216-809-11	s	RESISTOR,CHIP 100 1/10W 1608
R433	1-216-846-11	s	RESISTOR,CHIP 120K 1/16W (1608
R434	1-216-846-11	s	RESISTOR,CHIP 120K 1/16W (1608
R435	1-216-846-11	s	RESISTOR,CHIP 120K 1/16W (1608
R436	1-216-846-11	s	RESISTOR,CHIP 120K 1/16W (1608
R437	1-218-904-11	s	RESISTOR,CHIP 240K 1/10W(1608)
R438	1-218-904-11	s	RESISTOR,CHIP 240K 1/10W(1608)
R439	1-218-903-11	s	RESISTOR,CHIP 220K 1/10W(1608)
R440	1-218-903-11	s	RESISTOR,CHIP 220K 1/10W(1608)
R441	1-218-903-11	s	RESISTOR,CHIP 220K 1/10W(1608)
R442	1-218-907-11	s	RESISTOR,CHIP 330K 1/10W(1608)
R443	1-218-871-11	s	RESISTOR,CHIP 10K 1/10W (1608)
RY401	⚠ 1-755-395-11	s	RELAY (AC POWER)

GB BOARD

Ref. No. or Q'ty	Part No.	SP	Description
1pc	⚠ A-1300-752-A	s	MOUNTED CIRCUIT BOARD, GB
5pcs	7-682-648-09	s	SCREW +PS 3X8(EP-FE/ZNBK/CM2)
C101	1-115-789-11	s	CAPACITOR ELECT 1000MF/25V 105
C102	1-126-400-11	s	CAPACITOR ELECT 22MF/35V(CHIP)
C103	1-107-911-11	s	CAPACITOR,ELECT 220MF/50V
C104	1-115-789-11	s	CAPACITOR ELECT 1000MF/25V 105
C105	1-126-396-11	s	CAPACITOR,ELECT 47MF/16V(CHIP)
C106	1-162-970-11	s	CAPACITOR CERAMIC 0.01MF/25V B
C107	1-126-396-11	s	CAPACITOR,ELECT 47MF/16V(CHIP)
C108	1-137-980-91	s	CAPACITOR,CHIP CERAMIC 0.47MF
C109	1-107-826-11	s	CAPACITOR,CHIP CERAMIC 0.1MF
C110	1-130-016-11	s	CAPACITOR, PP FILM 680PF/50V
C111	1-130-495-00	s	CAPACITOR FILM 0.1MF/50V PETP
C112	1-128-947-31	s	CAPACITOR, ELECT 3300MF
C113	1-126-396-11	s	CAPACITOR,ELECT 47MF/16V(CHIP)
C114	1-126-405-11	s	CAPACITOR,ELECT 10MF/50V(CHIP
C115	1-127-861-11	s	CAP, CERAMIC 2.2MF B (3216)
C116	9-910-999-34	s	DELETED FROM RP MASTER
C117	1-126-396-11	s	CAPACITOR,ELECT 47MF/16V(CHIP)
C118	1-107-913-11	s	CAPACITOR,ELECT 470MF/50V
C119	1-131-877-11	s	CAP, METALIZED PP FILM
C120	1-162-970-11	s	CAPACITOR CERAMIC 0.01MF/25V B
C121	1-162-970-11	s	CAPACITOR CERAMIC 0.01MF/25V B
C122	1-115-830-11	s	CAPACITOR ELECT 120MF
C123	1-107-826-11	s	CAPACITOR,CHIP CERAMIC 0.1MF
C124	1-107-826-11	s	CAPACITOR,CHIP CERAMIC 0.1MF
C125	1-126-396-11	s	CAPACITOR,ELECT 47MF/16V(CHIP)
C126	1-109-994-11	s	CAPACITOR,CHIP CERAMIC 2.2MF B
C127	1-107-826-11	s	CAPACITOR,CHIP CERAMIC 0.1MF
C128	1-107-826-11	s	CAPACITOR,CHIP CERAMIC 0.1MF
C129	1-107-826-11	s	CAPACITOR,CHIP CERAMIC 0.1MF
C202	1-107-826-11	s	CAPACITOR,CHIP CERAMIC 0.1MF
C203	1-107-826-11	s	CAPACITOR,CHIP CERAMIC 0.1MF
C210	1-135-342-11	s	CAPACITOR,SOLID ELECT 56MF
C212	1-131-998-11	s	CAP, SOLID ELECT 82MF 6.3 V
C213	1-107-826-11	s	CAPACITOR,CHIP CERAMIC 0.1MF
C214	1-165-872-11	s	CAPACITOR,SOLID ELECT 47MF
C215	1-117-370-11	s	CAPACITOR CERAMIC 10MF (3216)
C219	1-107-826-11	s	CAPACITOR,CHIP CERAMIC 0.1MF
C301	1-131-992-11	s	CAP, CERAMIC 100000PF F 1608
C302	1-126-396-11	s	CAPACITOR,ELECT 47MF/16V(CHIP)
C303	1-131-992-11	s	CAP, CERAMIC 100000PF F 1608
C304	1-126-396-11	s	CAPACITOR,ELECT 47MF/16V(CHIP)
C305	1-164-506-11	s	CAPACITOR,CERAMIC 4.7MF/16V
C306	1-137-980-91	s	CAPACITOR,CHIP CERAMIC 0.47MF
C307	1-107-826-11	s	CAPACITOR,CHIP CERAMIC 0.1MF
C308	1-126-396-11	s	CAPACITOR,ELECT 47MF/16V(CHIP)
C309	1-107-826-11	s	CAPACITOR,CHIP CERAMIC 0.1MF
C310	1-100-117-12	s	CAPACITOR,DOUBLE LAYER 1.0F
C311	1-100-117-12	s	CAPACITOR,DOUBLE LAYER 1.0F
C312	1-131-992-11	s	CAP, CERAMIC 100000PF F 1608
C313	1-126-396-11	s	CAPACITOR,ELECT 47MF/16V(CHIP)
C314	1-131-992-11	s	CAP, CERAMIC 100000PF F 1608
C315	1-126-396-11	s	CAPACITOR,ELECT 47MF/16V(CHIP)
C316	1-115-339-11	s	CAPACITOR,CERAMIC 0.1MF/50V
C317	1-115-339-11	s	CAPACITOR,CERAMIC 0.1MF/50V
CN101	⚠ 1-691-960-21	o	PIN, CONNECTOR (PC BOARD) 3P
CN102	1-770-468-21	o	PIN, CONNECTOR (PC BOARD) 10P

(GB BOARD)

Ref. No. or Q'ty	Part No.	SP	Description
CN104	⚠ 1-794-509-11	s	PIN, CONNECTOR (PC BOARD) (3P)
CN105	1-695-915-11	s	TAB (CONTACT)
CN301	1-794-509-11	s	PIN, CONNECTOR (PC BOARD) (3P)
CN302	1-573-806-21	s	PIN,CONNECTOR (6P)(SMD)(1.5MM)
CN303	1-691-550-11	s	PIN,CONNECTOR (3P)(SMD)(1.5MM)
D101	8-719-073-01	s	DIODE MA111-(K8).S0
D102	8-719-510-09	s	DIODE D10SC6M (RECTI)
D103	8-719-073-01	s	DIODE MA111-(K8).S0
D104	8-719-037-37	s	DIODE RD18SB-T1
D105	8-719-073-52	s	DIODE D2FS6-TA
D106	8-719-510-12	s	DIODE D10SC4M
D107	8-719-510-12	s	DIODE D10SC4M
D108	8-719-073-01	s	DIODE MA111-(K8).S0
D109	8-719-979-64	s	DIODE UF4005PKG23
D110	8-719-055-30	s	DIODE D1FS4A-TA
D111	8-719-055-30	s	DIODE D1FS4A-TA
D112	8-719-037-54	s	DIODE RD30SB-T1
D113	8-719-073-01	s	DIODE MA111-(K8).S0
D114	8-719-055-30	s	DIODE D1FS4A-TA
D115	8-719-055-30	s	DIODE D1FS4A-TA
D116	8-719-037-57	s	DIODE RD39SB-T1
D117	8-719-073-01	s	DIODE MA111-(K8).S0
D204	8-719-073-01	s	DIODE MA111-(K8).S0
D205	8-719-914-44	s	DIODE DAP202K (DUAL)
D206	8-719-914-44	s	DIODE DAP202K (DUAL)
D207	8-719-078-04	s	DIODE EC31QS03L-TE12L
D301	8-719-073-01	s	DIODE MA111-(K8).S0
D302	8-719-073-01	s	DIODE MA111-(K8).S0
D303	8-719-055-30	s	DIODE D1FS4A-TA
D304	8-719-073-01	s	DIODE MA111-(K8).S0
D305	8-719-055-30	s	DIODE D1FS4A-TA
D306	8-719-055-30	s	DIODE D1FS4A-TA
D307	8-719-055-30	s	DIODE D1FS4A-TA
D308	8-719-055-30	s	DIODE D1FS4A-TA
D309	8-719-055-30	s	DIODE D1FS4A-TA
D310	8-719-055-30	s	DIODE D1FS4A-TA
D311	8-719-914-43	s	DIODE DAN202K
D312	8-719-914-43	s	DIODE DAN202K
D313	8-719-073-01	s	DIODE MA111-(K8).S0
D314	8-719-055-30	s	DIODE D1FS4A-TA
D315	8-719-914-43	s	DIODE DAN202K
D316	8-719-055-30	s	DIODE D1FS4A-TA
D317	8-719-073-01	s	DIODE MA111-(K8).S0
D318	8-719-054-58	s	DIODE D1F20-TL
IC101	8-759-231-53	s	IC TA7805S
IC102	8-759-670-30	s	IC MCZ3001D
IC103	8-759-100-93	s	IC UPC393G2
IC104	8-759-324-03	s	IC HA17431UA(TL)
IC201	8-759-485-63	s	IC MAX1626ESA-TE2
IC204	8-759-100-93	s	IC UPC393G2
IC301	8-759-592-79	s	IC BA00AST
IC302	8-759-643-48	s	IC BA00ASFP-E2
IC303	8-759-388-31	s	IC PQ20VZ1U
IC304	8-759-144-72	s	IC UPC358G2-E2
IC305	8-759-592-79	s	IC BA00AST
IC306	8-759-144-72	s	IC UPC358G2-E2
IC307	8-759-643-48	s	IC BA00ASFP-E2
L101	1-416-948-21	s	COIL, CHOKE (SMD)

(GB BOARD)

Ref. No. or Q'ty	Part No.	SP	Description
L102	1-416-948-21	s	COIL, CHOKE (SMD)
L103	1-416-948-21	s	COIL, CHOKE (SMD)
L104	1-409-529-41	s	COIL, CHOKE 10UH
L201	1-409-527-41	s	COIL, CHOKE 4.7UH
L202	1-416-949-21	s	COIL, CHOKE (SMD)
L203	1-409-527-41	s	COIL, CHOKE 4.7UH
PH101	⚠ 8-749-016-82	s	PHOTO COUPLER PC123GY2
PH102	⚠ 8-749-016-82	s	PHOTO COUPLER PC123GY2
Q101	8-729-049-51	s	TRANSISTOR 2SK2876-01MR-F119
Q102	8-729-049-51	s	TRANSISTOR 2SK2876-01MR-F119
Q103	8-729-230-49	s	TRANSISTOR 2SC2712-YG
Q104	8-729-216-22	s	TRANSISTOR 2SA1162-G
Q105	8-729-048-69	s	TRANSISTOR 2SJ530S-TL
Q106	8-729-047-85	s	TRANSISTOR SI4416DY-T1
Q107	8-729-928-81	s	TRANSISTOR DTC144EE
Q108	8-729-048-69	s	TRANSISTOR 2SJ530S-TL
Q109	8-729-048-69	s	TRANSISTOR 2SJ530S-TL
Q110	8-729-928-27	s	TRANSISTOR DTA144EE
Q205	8-729-047-32	s	TRANSISTOR SI4425DY-T1
Q207	1-801-806-11	s	TRANSISTOR DTC144EKA
Q208	8-729-928-27	s	TRANSISTOR DTA144EE
Q301	1-801-806-11	s	TRANSISTOR DTC144EKA
Q302	1-801-806-11	s	TRANSISTOR DTC144EKA
Q303	8-729-048-69	s	TRANSISTOR 2SJ530S-TL
R101	1-216-841-11	s	RESISTOR, CHIP 47K 1/10W 1608
R102	1-216-841-11	s	RESISTOR, CHIP 47K 1/10W 1608
R103	1-216-837-11	s	RESISTOR,CHIP 22K 1/16W 1608
R104	1-216-841-11	s	RESISTOR, CHIP 47K 1/10W 1608
R105	1-202-933-61	s	RESISTOR, FUSE 0.1 1/2W
R106	1-216-841-11	s	RESISTOR, CHIP 47K 1/10W 1608
R107	1-220-338-11	s	RESISTOR,CHIP 330K 1/2W (4532)
R108	1-220-338-11	s	RESISTOR,CHIP 330K 1/2W (4532)
R109	1-220-338-11	s	RESISTOR,CHIP 330K 1/2W (4532)
R110	1-216-837-11	s	RESISTOR,CHIP 22K 1/16W 1608
R111	1-218-877-11	s	RESISTOR,CHIP 18K 1/10W (1608)
R112	1-249-417-11	s	RESISTOR,CARBON 1K 1/4W(SMALL)
R113	1-218-877-11	s	RESISTOR,CHIP 18K 1/10W (1608)
R114	1-218-837-11	s	RESISTOR,CHIP 390 1/10W (1608)
R115	1-216-797-11	s	RESISTOR,CHIP 10 1/10W 1608
R116	1-218-878-11	s	RESISTOR,CHIP 20K 1/10W (1608)
R117	1-216-833-11	s	RESISTOR,CHIP 10K 1/10W (1608)
R118	1-216-841-11	s	RESISTOR, CHIP 47K 1/10W 1608
R119	1-216-827-11	s	RESISTOR, CHIP 3.3K 1/10W 1608
R120	1-216-797-11	s	RESISTOR,CHIP 10 1/10W 1608
R121	1-249-389-11	s	RES,CARBON 4.7 1/4W
R122	1-216-833-11	s	RESISTOR,CHIP 10K 1/10W (1608)
R123	1-216-833-11	s	RESISTOR,CHIP 10K 1/10W (1608)
R124	1-216-833-11	s	RESISTOR,CHIP 10K 1/10W (1608)
R125	1-216-821-11	s	RESISTOR,CHIP 1.0K 1/10W(1608)
R126	1-216-809-11	s	RESISTOR,CHIP 100 1/10W 1608
R127	1-216-815-11	s	RESISTOR,CHIP 330 1/10W 1608
R128	1-245-259-21	s	RESISTOR, METAL FILM CHIP 0.22
R129	1-245-259-21	s	RESISTOR, METAL FILM CHIP 0.22
R130	1-216-821-11	s	RESISTOR,CHIP 1.0K 1/10W(1608)
R131	1-216-827-11	s	RESISTOR, CHIP 3.3K 1/10W 1608
R132	1-218-863-11	s	RESISTOR,CHIP 4.7K 1/10W(1608)
R133	1-216-825-11	s	RESISTOR,CHIP 2.2K 1/10W 1608

(GB BOARD)

Ref. No. or Q'ty	Part No.	SP	Description
R134	1-216-821-11	s	RESISTOR,CHIP 1.0K 1/10W(1608)
R135	1-218-855-11	s	RESISTOR,CHIP 2.2K 1/10W(1608)
R136	1-216-833-11	s	RESISTOR,CHIP 10K 1/10W (1608)
R137	1-216-827-11	s	RESISTOR, CHIP 3.3K 1/10W 1608
R138	1-216-833-11	s	RESISTOR,CHIP 10K 1/10W (1608)
R139	1-216-833-11	s	RESISTOR,CHIP 10K 1/10W (1608)
R140	1-218-878-11	s	RESISTOR,CHIP 20K 1/10W (1608)
R141	1-216-833-11	s	RESISTOR,CHIP 10K 1/10W (1608)
R142	1-218-845-11	s	RESISTOR,CHIP 820 1/10W (1608)
R143	1-216-833-11	s	RESISTOR,CHIP 10K 1/10W (1608)
R144	1-216-833-11	s	RESISTOR,CHIP 10K 1/10W (1608)
R145	1-216-833-11	s	RESISTOR,CHIP 10K 1/10W (1608)
R146	1-216-845-11	s	RESISTOR,CHIP 100K 1/10W(1608)
R147	1-218-863-11	s	RESISTOR,CHIP 4.7K 1/10W(1608)
R148	1-216-833-11	s	RESISTOR,CHIP 10K 1/10W (1608)
R149	1-216-821-11	s	RESISTOR,CHIP 1.0K 1/10W(1608)
R150	1-216-821-11	s	RESISTOR,CHIP 1.0K 1/10W(1608)
R151	1-216-833-11	s	RESISTOR,CHIP 10K 1/10W (1608)
R232	1-216-833-11	s	RESISTOR,CHIP 10K 1/10W (1608)
R233	1-216-833-11	s	RESISTOR,CHIP 10K 1/10W (1608)
R235	1-216-833-11	s	RESISTOR,CHIP 10K 1/10W (1608)
R236	1-216-833-11	s	RESISTOR,CHIP 10K 1/10W (1608)
R237	1-216-821-11	s	RESISTOR,CHIP 1.0K 1/10W(1608)
R238	1-216-841-11	s	RESISTOR, CHIP 47K 1/10W 1608
R239	1-216-839-11	s	RESISTOR,CHIP 33K 1/10W 1608
R240	1-216-821-11	s	RESISTOR,CHIP 1.0K 1/10W(1608)
R241	1-216-837-11	s	RESISTOR,CHIP 22K 1/16W 1608
R242	1-216-821-11	s	RESISTOR,CHIP 1.0K 1/10W(1608)
R244	1-216-833-11	s	RESISTOR,CHIP 10K 1/10W (1608)
R245	1-219-611-21	s	RESISTOR, CHIP 0.047 1W
R301	1-216-833-11	s	RESISTOR,CHIP 10K 1/10W (1608)
R302	1-216-839-11	s	RESISTOR,CHIP 33K 1/10W 1608
R303	1-218-883-11	s	RESISTOR,CHIP 33K 1/10W (1608)
R304	1-218-853-11	s	RESISTOR,CHIP 1.8K 1/10W(1608)
R305	1-218-863-11	s	RESISTOR,CHIP 4.7K 1/10W(1608)
R306	1-218-871-11	s	RESISTOR,CHIP 10K 1/10W (1608)
R307	1-216-833-11	s	RESISTOR,CHIP 10K 1/10W (1608)
R308	1-216-839-11	s	RESISTOR,CHIP 33K 1/10W 1608
R309	1-218-881-11	s	RESISTOR, CHIP 27K 1/10W(1608)
R310	1-218-853-11	s	RESISTOR,CHIP 1.8K 1/10W(1608)
R311	1-218-863-11	s	RESISTOR,CHIP 4.7K 1/10W(1608)
R312	1-218-873-11	s	RESISTOR,CHIP 12K 1/10W (1608)
R313	1-216-809-11	s	RESISTOR,CHIP 100 1/10W 1608
R314	1-216-833-11	s	RESISTOR,CHIP 10K 1/10W (1608)
R315	1-216-851-11	s	RESISTOR,CHIP 330K 1/16W 1608
R317	1-216-851-11	s	RESISTOR,CHIP 330K 1/16W 1608
R318	1-216-833-11	s	RESISTOR,CHIP 10K 1/10W (1608)
R319	1-216-829-11	s	RESISTOR,CHIP 4.7K 1/10W(1608)
R320	1-218-883-11	s	RESISTOR,CHIP 33K 1/10W (1608)
R321	1-218-863-11	s	RESISTOR,CHIP 4.7K 1/10W(1608)
R322	1-215-864-00	s	RESISTOR,METAL FILM 150 1W
R323	1-215-864-00	s	RESISTOR,METAL FILM 150 1W
R324	1-216-833-11	s	RESISTOR,CHIP 10K 1/10W (1608)
R325	1-216-829-11	s	RESISTOR,CHIP 4.7K 1/10W(1608)
R326	1-216-837-11	s	RESISTOR,CHIP 22K 1/16W 1608
R327	1-216-837-11	s	RESISTOR,CHIP 22K 1/16W 1608
R328	1-216-837-11	s	RESISTOR,CHIP 22K 1/16W 1608
R329	1-216-837-11	s	RESISTOR,CHIP 22K 1/16W 1608
R330	1-216-833-11	s	RESISTOR,CHIP 10K 1/10W (1608)

(GB BOARD)

Ref. No. or Q'ty	Part No.	SP	Description
R331	1-216-839-11	s	RESISTOR,CHIP 33K 1/10W 1608
R332	1-218-885-11	s	RESISTOR,CHIP 39K 1/10W (1608)
R333	1-218-847-11	s	RESISTOR, CHIP 1K 1/10W (1608)
R334	1-218-863-11	s	RESISTOR,CHIP 4.7K 1/10W(1608)
R335	1-218-871-11	s	RESISTOR,CHIP 10K 1/10W (1608)
R336	1-216-851-11	s	RESISTOR,CHIP 330K 1/16W 1608
R337	1-216-837-11	s	RESISTOR,CHIP 22K 1/16W 1608
R339	1-216-833-11	s	RESISTOR,CHIP 10K 1/10W (1608)
R340	1-216-839-11	s	RESISTOR,CHIP 33K 1/10W 1608
R341	1-218-885-11	s	RESISTOR,CHIP 39K 1/10W (1608)
R342	1-218-851-11	s	RESISTOR,CHIP 1.5K 1/10W(1608)
R343	1-218-863-11	s	RESISTOR,CHIP 4.7K 1/10W(1608)
R344	1-218-877-11	s	RESISTOR,CHIP 18K 1/10W (1608)
R345	1-216-864-11	s	CONDUCTOR, CHIP (1608)
T101	⚠ 1-437-301-21	s	TRANSFORMER, CONVERTER (PIT)

NR BOARD

Ref. No. or Q'ty	Part No.	SP	Description
1pc	⚠ A-1401-534-A	s	MOUNTED CIRCUIT BOARD, NR
C1052	1-115-156-11	s	CAPACITOR,CERAMIC 1MF/10V(1608
CN1052	1-770-620-21	s	PIN, CONNECTOR 3P
IC1052	8-749-012-17	s	IC RS-140-T
R1053	1-218-937-11	s	RESISTOR, CHIP 47
R1054	1-218-941-81	s	C-RES,V 100-1/16W J

Q BOARD

Ref. No. or Q'ty	Part No.	SP	Description
1pc	⚠ A-1300-753-B	s	MOUNTED CIRCUIT BOARD, Q
C100	1-162-970-11	s	CAPACITOR CERAMIC 0.01MF/25V B
C101	1-162-970-11	s	CAPACITOR CERAMIC 0.01MF/25V B
C102	1-162-970-11	s	CAPACITOR CERAMIC 0.01MF/25V B
C103	1-110-666-11	s	CAPACITOR,ELECT 22MF/6.3V(BP)
C104	1-110-666-11	s	CAPACITOR,ELECT 22MF/6.3V(BP)
C106	1-110-666-11	s	CAPACITOR,ELECT 22MF/6.3V(BP)
C108	1-107-826-11	s	CAPACITOR,CHIP CERAMIC 0.1MF
C120	1-113-701-21	s	CAPACITOR,ELECT 22MF/16V (NP)
C121	1-113-701-21	s	CAPACITOR,ELECT 22MF/16V (NP)
C122	1-113-701-21	s	CAPACITOR,ELECT 22MF/16V (NP)
C123	1-113-701-21	s	CAPACITOR,ELECT 22MF/16V (NP)
C124	1-115-566-11	s	CAPACITOR,CERAMIC 4.7MF B/6.3V
C125	1-115-566-11	s	CAPACITOR,CERAMIC 4.7MF B/6.3V
C126	1-115-566-11	s	CAPACITOR,CERAMIC 4.7MF B/6.3V
C127	1-115-566-11	s	CAPACITOR,CERAMIC 4.7MF B/6.3V
C128	1-115-156-11	s	CAPACITOR,CERAMIC 1MF/10V(1608
C129	1-115-156-11	s	CAPACITOR,CERAMIC 1MF/10V(1608
C150	1-165-875-11	s	CAPACITOR, CHIP CERAMIC 10MF B
C151	1-165-875-11	s	CAPACITOR, CHIP CERAMIC 10MF B
C152	1-165-875-11	s	CAPACITOR, CHIP CERAMIC 10MF B
C153	1-165-875-11	s	CAPACITOR, CHIP CERAMIC 10MF B
C154	1-165-875-11	s	CAPACITOR, CHIP CERAMIC 10MF B
C155	1-165-875-11	s	CAPACITOR, CHIP CERAMIC 10MF B
C200	1-162-970-11	s	CAPACITOR CERAMIC 0.01MF/25V B
C201	1-162-970-11	s	CAPACITOR CERAMIC 0.01MF/25V B
C202	1-162-970-11	s	CAPACITOR CERAMIC 0.01MF/25V B
C203	1-110-666-11	s	CAPACITOR,ELECT 22MF/6.3V(BP)
C204	1-110-666-11	s	CAPACITOR,ELECT 22MF/6.3V(BP)
C206	1-110-666-11	s	CAPACITOR,ELECT 22MF/6.3V(BP)
C208	1-107-826-11	s	CAPACITOR,CHIP CERAMIC 0.1MF
C210	1-162-970-11	s	CAPACITOR CERAMIC 0.01MF/25V B
C211	1-162-970-11	s	CAPACITOR CERAMIC 0.01MF/25V B
C212	1-162-970-11	s	CAPACITOR CERAMIC 0.01MF/25V B
C213	1-110-666-11	s	CAPACITOR,ELECT 22MF/6.3V(BP)
C214	1-110-666-11	s	CAPACITOR,ELECT 22MF/6.3V(BP)
C215	1-110-666-11	s	CAPACITOR,ELECT 22MF/6.3V(BP)
C315	1-128-004-11	s	CAPACITOR ELECT 10MF/16V(CHIP)
C316	1-128-453-21	s	CAPACITOR,ELECT 47MF
C317	1-128-399-11	s	CAPACITOR ELECT 330MF/16V(CHIP
C318	1-115-156-11	s	CAPACITOR,CERAMIC 1MF/10V(1608
C319	1-115-156-11	s	CAPACITOR,CERAMIC 1MF/10V(1608
C320	1-162-905-11	s	CAPACITOR,CERAMIC 1PF/50V (CK)
C321	1-128-453-21	s	CAPACITOR,ELECT 47MF
C322	1-128-399-11	s	CAPACITOR ELECT 330MF/16V(CHIP
C323	1-115-156-11	s	CAPACITOR,CERAMIC 1MF/10V(1608
C324	1-115-156-11	s	CAPACITOR,CERAMIC 1MF/10V(1608
C325	1-162-905-11	s	CAPACITOR,CERAMIC 1PF/50V (CK)
C326	1-128-453-21	s	CAPACITOR,ELECT 47MF
C327	1-128-399-11	s	CAPACITOR ELECT 330MF/16V(CHIP
C328	1-115-156-11	s	CAPACITOR,CERAMIC 1MF/10V(1608
C329	1-115-156-11	s	CAPACITOR,CERAMIC 1MF/10V(1608
C330	1-162-905-11	s	CAPACITOR,CERAMIC 1PF/50V (CK)
C331	1-128-004-11	s	CAPACITOR ELECT 10MF/16V(CHIP)
C332	1-128-004-11	s	CAPACITOR ELECT 10MF/16V(CHIP)
C333	1-126-205-11	s	CAPACITOR,ELECT 47M/6.3
C334	1-107-826-11	s	CAPACITOR,CHIP CERAMIC 0.1MF
C402	1-126-209-11	s	CAPACITOR,ELECT 100MF/4V

(Q BOARD)

Ref. No. or Q'ty	Part No.	SP	Description
C403	1-126-209-11	s	CAPACITOR,ELECT 100MF/4V
C404	1-107-826-11	s	CAPACITOR,CHIP CERAMIC 0.1MF
C405	1-107-826-11	s	CAPACITOR,CHIP CERAMIC 0.1MF
C406	1-164-505-11	s	CAPACITOR,CHIP CERAMIC 2.2MF
C407	1-107-826-11	s	CAPACITOR,CHIP CERAMIC 0.1MF
C408	1-164-505-11	s	CAPACITOR,CHIP CERAMIC 2.2MF
C409	1-126-209-11	s	CAPACITOR,ELECT 100MF/4V
C410	1-162-970-11	s	CAPACITOR CERAMIC 0.01MF/25V B
C411	1-107-826-11	s	CAPACITOR,CHIP CERAMIC 0.1MF
C412	1-107-826-11	s	CAPACITOR,CHIP CERAMIC 0.1MF
C413	1-107-826-11	s	CAPACITOR,CHIP CERAMIC 0.1MF
C414	1-107-826-11	s	CAPACITOR,CHIP CERAMIC 0.1MF
C415	1-107-826-11	s	CAPACITOR,CHIP CERAMIC 0.1MF
C416	1-107-826-11	s	CAPACITOR,CHIP CERAMIC 0.1MF
C417	1-107-826-11	s	CAPACITOR,CHIP CERAMIC 0.1MF
C418	1-107-826-11	s	CAPACITOR,CHIP CERAMIC 0.1MF
C419	1-164-505-11	s	CAPACITOR,CHIP CERAMIC 2.2MF
C420	1-126-209-11	s	CAPACITOR,ELECT 100MF/4V
C421	1-115-156-11	s	CAPACITOR,CERAMIC 1MF/10V(1608
C422	1-162-970-11	s	CAPACITOR CERAMIC 0.01MF/25V B
C423	1-107-826-11	s	CAPACITOR,CHIP CERAMIC 0.1MF
C424	1-107-826-11	s	CAPACITOR,CHIP CERAMIC 0.1MF
C425	1-164-505-11	s	CAPACITOR,CHIP CERAMIC 2.2MF
C426	1-107-826-11	s	CAPACITOR,CHIP CERAMIC 0.1MF
C428	1-107-826-11	s	CAPACITOR,CHIP CERAMIC 0.1MF
C437	1-127-715-11	s	CAPACITOR,CERAMIC 0.22MF B1608
C438	1-127-715-11	s	CAPACITOR,CERAMIC 0.22MF B1608
C439	1-127-715-11	s	CAPACITOR,CERAMIC 0.22MF B1608
C440	1-127-715-11	s	CAPACITOR,CERAMIC 0.22MF B1608
C500	1-164-315-11	s	CAPACITOR,CERAMIC 470PF/50V CH
C503	1-125-889-11	s	CAPACITOR, C.CERAMIC 2.2MF
C504	1-125-889-11	s	CAPACITOR, C.CERAMIC 2.2MF
C506	1-128-004-11	s	CAPACITOR ELECT 10MF/16V(CHIP)
C508	1-162-964-11	s	CAPACITOR,CERAMIC 1000PF/50V B
C509	1-162-964-11	s	CAPACITOR,CERAMIC 1000PF/50V B
C510	1-162-964-11	s	CAPACITOR,CERAMIC 1000PF/50V B
C511	1-107-826-11	s	CAPACITOR,CHIP CERAMIC 0.1MF
C512	1-162-964-11	s	CAPACITOR,CERAMIC 1000PF/50V B
C513	1-162-964-11	s	CAPACITOR,CERAMIC 1000PF/50V B
C514	1-162-964-11	s	CAPACITOR,CERAMIC 1000PF/50V B
C515	1-107-826-11	s	CAPACITOR,CHIP CERAMIC 0.1MF
C516	1-107-826-11	s	CAPACITOR,CHIP CERAMIC 0.1MF
C517	1-107-826-11	s	CAPACITOR,CHIP CERAMIC 0.1MF
C518	1-107-826-11	s	CAPACITOR,CHIP CERAMIC 0.1MF
C519	1-107-826-11	s	CAPACITOR,CHIP CERAMIC 0.1MF
C530	1-115-156-11	s	CAPACITOR,CERAMIC 1MF/10V(1608
C601	1-107-826-11	s	CAPACITOR,CHIP CERAMIC 0.1MF
C602	1-107-826-11	s	CAPACITOR,CHIP CERAMIC 0.1MF
C603	1-107-826-11	s	CAPACITOR,CHIP CERAMIC 0.1MF
C604	1-107-826-11	s	CAPACITOR,CHIP CERAMIC 0.1MF
C605	1-107-826-11	s	CAPACITOR,CHIP CERAMIC 0.1MF
C606	1-107-826-11	s	CAPACITOR,CHIP CERAMIC 0.1MF
C607	1-107-826-11	s	CAPACITOR,CHIP CERAMIC 0.1MF
C608	1-107-826-11	s	CAPACITOR,CHIP CERAMIC 0.1MF
C609	1-164-156-11	s	CAPACITOR,CERAMIC 0.1MF/25V F
C610	1-126-395-11	s	CAPACITOR,ELECT 22MF/16V(CHIP)
C611	1-109-982-11	s	CAPACITOR,CHIP CERAMIC 1MF/10V
C612	1-164-156-11	s	CAPACITOR,CERAMIC 0.1MF/25V F
C613	1-164-156-11	s	CAPACITOR,CERAMIC 0.1MF/25V F

(Q BOARD)

Ref. No. or Q'ty	Part No.	SP	Description
C614	1-126-395-11	s	CAPACITOR,ELECT 22MF/16V(CHIP)
C615	1-164-156-11	s	CAPACITOR,CERAMIC 0.1MF/25V F
C616	1-164-156-11	s	CAPACITOR,CERAMIC 0.1MF/25V F
C617	1-164-156-11	s	CAPACITOR,CERAMIC 0.1MF/25V F
C618	1-109-982-11	s	CAPACITOR,CHIP CERAMIC 1MF/10V
C619	1-164-156-11	s	CAPACITOR,CERAMIC 0.1MF/25V F
C625	1-164-156-11	s	CAPACITOR,CERAMIC 0.1MF/25V F
C626	1-126-395-11	s	CAPACITOR,ELECT 22MF/16V(CHIP)
C627	1-126-395-11	s	CAPACITOR,ELECT 22MF/16V(CHIP)
C628	1-126-603-11	s	CAPACITOR,ELECT 4.7MF/35V
C629	1-126-603-11	s	CAPACITOR,ELECT 4.7MF/35V
C630	1-128-004-11	s	CAPACITOR ELECT 10MF/16V(CHIP)
C701	1-162-970-11	s	CAPACITOR CERAMIC 0.01MF/25V B
C702	1-115-156-11	s	CAPACITOR,CERAMIC 1MF/10V(1608
C703	1-115-156-11	s	CAPACITOR,CERAMIC 1MF/10V(1608
C704	1-115-156-11	s	CAPACITOR,CERAMIC 1MF/10V(1608
C711	1-126-205-11	s	CAPACITOR,ELECT 47M/6.3
C800	1-128-995-11	s	CAPACITOR ELECT 100MF / 10 V
C801	1-128-934-11	s	CAPACITOR CHIP CERAMIC 0.33MF
C802	1-107-826-11	s	CAPACITOR,CHIP CERAMIC 0.1MF
C803	1-162-970-11	s	CAPACITOR CERAMIC 0.01MF/25V B
C804	1-128-995-11	s	CAPACITOR ELECT 100MF / 10 V
C805	1-107-826-11	s	CAPACITOR,CHIP CERAMIC 0.1MF
C806	1-107-826-11	s	CAPACITOR,CHIP CERAMIC 0.1MF
C807	1-162-970-11	s	CAPACITOR CERAMIC 0.01MF/25V B
C808	1-107-826-11	s	CAPACITOR,CHIP CERAMIC 0.1MF
C809	1-107-826-11	s	CAPACITOR,CHIP CERAMIC 0.1MF
C810	1-107-826-11	s	CAPACITOR,CHIP CERAMIC 0.1MF
C811	1-104-570-11	s	CAPACITOR,CERAMIC 1000PF/2KVDC
C812	1-107-826-11	s	CAPACITOR,CHIP CERAMIC 0.1MF
C813	1-107-826-11	s	CAPACITOR,CHIP CERAMIC 0.1MF
C900	1-107-826-11	s	CAPACITOR,CHIP CERAMIC 0.1MF
C901	1-107-826-11	s	CAPACITOR,CHIP CERAMIC 0.1MF
C902	1-107-826-11	s	CAPACITOR,CHIP CERAMIC 0.1MF
C903	1-107-826-11	s	CAPACITOR,CHIP CERAMIC 0.1MF
C904	1-162-927-11	s	CAPACITOR,CERAMIC 100PF/50V CH
C905	1-162-910-11	s	CAPACITOR,CERAMIC 5PF/50V 1608
C906	1-107-826-11	s	CAPACITOR,CHIP CERAMIC 0.1MF
C907	1-107-826-11	s	CAPACITOR,CHIP CERAMIC 0.1MF
C908	1-107-826-11	s	CAPACITOR,CHIP CERAMIC 0.1MF
C910	1-107-826-11	s	CAPACITOR,CHIP CERAMIC 0.1MF
C911	1-107-826-11	s	CAPACITOR,CHIP CERAMIC 0.1MF
C912	1-107-826-11	s	CAPACITOR,CHIP CERAMIC 0.1MF
CN100	1-694-811-11	s	TERMINAL BOARD ASSY, INPUT/OUT (INPUT-A)
CN200	1-694-811-11	s	TERMINAL BOARD ASSY, INPUT/OUT (INPUT-B)
CN301	1-694-811-11	s	TERMINAL BOARD ASSY, INPUT/OUT (MONITOR OUT)
CN401	1-817-104-11	s	CONNECTOR, DVI (INPUT-C)
CN402	1-770-449-21	o	CONNECTOR, BOARD TO BOARD 70P
CN502	1-537-797-12	s	TERMINAL BOARD ASSY, I/O (RS-232C)
CN701	1-770-449-21	o	CONNECTOR, BOARD TO BOARD 70P
CN702	1-770-449-21	o	CONNECTOR, BOARD TO BOARD 70P
CN801	1-815-157-11	o	JACK, MODULAR
D100	8-719-073-11	s	DIODE BZA456A
D102	8-719-059-53	s	DIODE MA3J14700LSO
D103	8-719-059-53	s	DIODE MA3J14700LSO

(Q BOARD)

Ref. No. or Q'ty	Part No.	SP	Description
D104	8-719-059-53	s	DIODE MA3J14700LSO
D105	8-719-073-01	s	DIODE MA111-(K8).S0
D106	8-719-073-01	s	DIODE MA111-(K8).S0
D120	8-719-059-53	s	DIODE MA3J14700LSO
D121	8-719-059-53	s	DIODE MA3J14700LSO
D122	8-719-059-53	s	DIODE MA3J14700LSO
D123	8-719-059-53	s	DIODE MA3J14700LSO
D125	8-719-158-37	s	DIODE RD9.1SB2
D126	8-719-158-37	s	DIODE RD9.1SB2
D200	8-719-073-11	s	DIODE BZA456A
D202	8-719-059-53	s	DIODE MA3J14700LSO
D203	8-719-059-53	s	DIODE MA3J14700LSO
D204	8-719-059-53	s	DIODE MA3J14700LSO
D205	8-719-059-53	s	DIODE MA3J14700LSO
D206	8-719-059-53	s	DIODE MA3J14700LSO
D207	8-719-059-53	s	DIODE MA3J14700LSO
D208	8-719-073-01	s	DIODE MA111-(K8).S0
D209	8-719-073-01	s	DIODE MA111-(K8).S0
D212	8-719-036-80	s	DIODE RD3.9SB
D215	8-719-036-80	s	DIODE RD3.9SB
D216	8-719-036-80	s	DIODE RD3.9SB
D303	8-719-059-53	s	DIODE MA3J14700LSO
D304	8-719-059-53	s	DIODE MA3J14700LSO
D305	8-719-059-53	s	DIODE MA3J14700LSO
D306	8-719-059-53	s	DIODE MA3J14700LSO
D307	8-719-059-53	s	DIODE MA3J14700LSO
D401	8-719-024-77	s	DIODE HN1D03FU-TE85L
D402	8-719-024-77	s	DIODE HN1D03FU-TE85L
D403	8-719-024-77	s	DIODE HN1D03FU-TE85L
D404	8-719-073-01	s	DIODE MA111-(K8).S0
D405	8-719-073-01	s	DIODE MA111-(K8).S0
D406	8-719-036-94	s	DIODE RD5.6SB-T1
D407	8-719-024-77	s	DIODE HN1D03FU-TE85L
D408	8-719-024-77	s	DIODE HN1D03FU-TE85L
D500	8-719-158-37	s	DIODE RD9.1SB2
D501	8-719-941-09	s	DIODE DAP202U
D502	8-719-941-86	s	DIODE DAN202U
D503	8-719-037-53	s	DIODE RD27SB-T1
D504	8-719-037-53	s	DIODE RD27SB-T1
D505	8-719-059-53	s	DIODE MA3J14700LSO
D506	8-719-037-53	s	DIODE RD27SB-T1
D507	8-719-059-53	s	DIODE MA3J14700LSO
D508	8-719-037-53	s	DIODE RD27SB-T1
D509	8-719-037-53	s	DIODE RD27SB-T1
D510	8-719-059-53	s	DIODE MA3J14700LSO
D511	8-719-037-53	s	DIODE RD27SB-T1
D531	8-719-036-80	s	DIODE RD3.9SB
D532	8-719-036-80	s	DIODE RD3.9SB
D540	8-719-024-77	s	DIODE HN1D03FU-TE85L
D601	8-719-158-37	s	DIODE RD9.1SB2
D602	8-719-158-37	s	DIODE RD9.1SB2
D603	8-719-158-37	s	DIODE RD9.1SB2
D604	8-719-158-37	s	DIODE RD9.1SB2
D605	8-719-158-37	s	DIODE RD9.1SB2
D606	8-719-158-37	s	DIODE RD9.1SB2
D607	8-719-158-37	s	DIODE RD9.1SB2
D608	8-719-158-37	s	DIODE RD9.1SB2
D609	8-719-158-37	s	DIODE RD9.1SB2
D610	8-719-158-37	s	DIODE RD9.1SB2

(Q BOARD)

Ref. No. or Q'ty	Part No.	SP	Description
D611	8-719-036-76	s	DIODE RD3.3SB2-T1
D612	8-719-941-86	s	DIODE DAN202U
D613	8-719-941-86	s	DIODE DAN202U
D614	8-719-941-86	s	DIODE DAN202U
FB100	1-414-921-11	s	INDUCTOR, FERRITE BEAD
FB101	1-414-921-11	s	INDUCTOR, FERRITE BEAD
FB200	1-414-921-11	s	INDUCTOR, FERRITE BEAD
FB201	1-414-921-11	s	INDUCTOR, FERRITE BEAD
FB202	1-414-921-11	s	INDUCTOR, FERRITE BEAD
FB401	1-414-921-11	s	INDUCTOR, FERRITE BEAD
FB402	1-414-921-11	s	INDUCTOR, FERRITE BEAD
FB405	1-414-921-11	s	INDUCTOR, FERRITE BEAD
FB520	1-469-185-11	s	INDUCTOR, FERRITE BEAD
FB521	1-469-185-11	s	INDUCTOR, FERRITE BEAD
FB522	1-414-921-11	s	INDUCTOR, FERRITE BEAD
FB523	1-414-921-11	s	INDUCTOR, FERRITE BEAD
IC100	8-759-661-55	s	IC ST24FC21M6TR
IC101	8-759-011-64	s	IC MC74HC4052F
IC102	8-759-422-82	s	IC HA4314BCB-E2
IC103	8-759-422-82	s	IC HA4314BCB-E2
IC104	8-759-422-82	s	IC HA4314BCB-E2
IC200	8-759-661-55	s	IC ST24FC21M6TR
IC301	8-759-542-11	s	IC MAX4223ESA-TG06
IC302	8-759-542-11	s	IC MAX4223ESA-TG06
IC303	8-759-542-11	s	IC MAX4223ESA-TG06
IC304	8-759-090-19	s	IC SN75453BPS
IC401	8-759-672-79	s	IC M24C02-WMN6T(A)
IC402	6-703-143-01	s	IC SII161B
IC406	8-759-593-23	s	IC S-80928ANMP-DDR-T2
IC500	8-759-285-61	s	IC PC74HC123D-T
IC502	8-759-252-59	s	IC MAX202CSE
IC601	8-759-352-94	s	IC TDA7309D013TR
IC602	8-759-983-69	s	IC LM358PS
IC603	8-759-525-25	s	IC BU4052BCF-E2
IC701	8-759-011-64	s	IC MC74HC4052F
IC702	8-759-671-94	s	IC MC74HC4053AFEL
IC703	8-759-671-94	s	IC MC74HC4053AFEL
IC710	6-600-108-01	s	IC RPM7140
IC800	8-759-460-72	s	IC BA033FP
IC801	6-703-790-01	s	IC 78Q2120-64CGT/LF
IC900	8-759-663-06	s	IC S-93C46AFT-TB
IC901	6-701-841-01	s	IC PST3628UL
IC902	6-802-267-01	s	IC S1S60000
J200	1-778-665-11	s	CONNECTOR, BNC (RECEPTACLE) (INPUT-D)
J203	1-563-935-11	s	JACK (DIA 3.5)(BLK)(AUDIO OUT)
J204	1-563-935-11	s	JACK (DIA 3.5)(BLK) (INPUT D AUDIO)
J205	1-563-935-11	s	JACK (DIA 3.5)(BLK) (INPUT B/C AUDIO)
J206	1-563-935-11	s	JACK (DIA 3.5)(BLK) (INPUT A AUDIO)
J209	1-770-361-11	s	TERMINAL BLOCK, S
J500	1-563-935-11	s	JACK (DIA 3.5)(BLK) (CONTROL S IN)
J514	1-816-227-11	s	CONNECTOR, USB (B)
L300	1-414-771-91	s	INDUCTOR 10.0UH
L301	1-414-771-91	s	INDUCTOR 10.0UH

(Q BOARD)

Ref. No. or Q'ty	Part No.	SP	Description
L302	1-414-771-91	s	INDUCTOR 10.0UH
L401	1-414-771-91	s	INDUCTOR 10.0UH
L500	1-412-363-11	s	FERRITE, EMI (SMD)
L501	1-412-363-11	s	FERRITE, EMI (SMD)
L502	1-412-363-11	s	FERRITE, EMI (SMD)
L503	1-414-771-91	s	INDUCTOR 10.0UH
L601	1-412-028-11	s	INDUCTOR,CHIP 4.7UH (3225)
Q402	8-729-029-14	s	TRANSISTOR DTC144EUA-T106
Q404	6-550-014-01	s	TRANSISTOR SSM6N15FU(TE85R)
Q500	8-729-026-49	s	TRANSISTOR 2SA1037AK-T146-R
Q501	8-729-026-49	s	TRANSISTOR 2SA1037AK-T146-R
Q502	8-729-029-14	s	TRANSISTOR DTC144EUA-T106
Q503	8-729-029-14	s	TRANSISTOR DTC144EUA-T106
Q504	8-729-029-14	s	TRANSISTOR DTC144EUA-T106
Q601	8-729-905-35	s	TRANSISTOR 2SC4081-R
Q602	8-729-905-35	s	TRANSISTOR 2SC4081-R
Q603	8-729-026-53	s	TRANSISTOR 2SA1576A-T106-QR
Q604	8-729-029-14	s	TRANSISTOR DTC144EUA-T106
Q605	8-729-029-14	s	TRANSISTOR DTC144EUA-T106
R100	1-216-864-11	s	CONDUCTOR, CHIP (1608)
R101	1-216-864-11	s	CONDUCTOR, CHIP (1608)
R102	1-216-864-11	s	CONDUCTOR, CHIP (1608)
R103	1-216-864-11	s	CONDUCTOR, CHIP (1608)
R104	1-216-805-11	s	RESISTOR,CHIP 47 1/10W 1608
R105	1-216-805-11	s	RESISTOR,CHIP 47 1/10W 1608
R106	1-216-813-11	s	RESISTOR, CHIP 220 1/10W 1608
R107	1-218-827-11	s	RESISTOR,CHIP 150 1/10W (1608)
R108	1-218-827-11	s	RESISTOR,CHIP 150 1/10W (1608)
R109	1-218-827-11	s	RESISTOR,CHIP 150 1/10W (1608)
R110	1-218-827-11	s	RESISTOR,CHIP 150 1/10W (1608)
R111	1-218-827-11	s	RESISTOR,CHIP 150 1/10W (1608)
R112	1-218-827-11	s	RESISTOR,CHIP 150 1/10W (1608)
R113	1-216-835-11	s	RESISTOR,CHIP 15K 1/10W
R114	1-216-835-11	s	RESISTOR,CHIP 15K 1/10W
R116	1-216-844-11	s	RESISTOR,CHIP 82K 1/16W 1608
R117	1-216-844-11	s	RESISTOR,CHIP 82K 1/16W 1608
R118	1-216-844-11	s	RESISTOR,CHIP 82K 1/16W 1608
R120	1-216-844-11	s	RESISTOR,CHIP 82K 1/16W 1608
R121	1-216-844-11	s	RESISTOR,CHIP 82K 1/16W 1608
R122	1-216-844-11	s	RESISTOR,CHIP 82K 1/16W 1608
R123	1-216-844-11	s	RESISTOR,CHIP 82K 1/16W 1608
R124	1-216-844-11	s	RESISTOR,CHIP 82K 1/16W 1608
R125	1-216-844-11	s	RESISTOR,CHIP 82K 1/16W 1608
R126	1-216-844-11	s	RESISTOR,CHIP 82K 1/16W 1608
R127	1-216-844-11	s	RESISTOR,CHIP 82K 1/16W 1608
R128	1-216-809-11	s	RESISTOR,CHIP 100 1/10W 1608
R129	1-216-809-11	s	RESISTOR,CHIP 100 1/10W 1608
R130	1-216-809-11	s	RESISTOR,CHIP 100 1/10W 1608
R131	1-216-809-11	s	RESISTOR,CHIP 100 1/10W 1608
R132	1-216-809-11	s	RESISTOR,CHIP 100 1/10W 1608
R133	1-216-809-11	s	RESISTOR,CHIP 100 1/10W 1608
R134	1-216-809-11	s	RESISTOR,CHIP 100 1/10W 1608
R135	1-216-809-11	s	RESISTOR,CHIP 100 1/10W 1608
R136	1-216-845-11	s	RESISTOR,CHIP 100K 1/10W(1608)
R140	1-216-809-11	s	RESISTOR,CHIP 100 1/10W 1608
R141	1-216-809-11	s	RESISTOR,CHIP 100 1/10W 1608
R150	1-216-809-11	s	RESISTOR,CHIP 100 1/10W 1608
R151	1-216-809-11	s	RESISTOR,CHIP 100 1/10W 1608

(Q BOARD)

Ref. No. or Q'ty	Part No.	SP	Description
R152	1-216-809-11	s	RESISTOR,CHIP 100 1/10W 1608
R153	1-216-809-11	s	RESISTOR,CHIP 100 1/10W 1608
R154	1-216-809-11	s	RESISTOR,CHIP 100 1/10W 1608
R155	1-216-809-11	s	RESISTOR,CHIP 100 1/10W 1608
R156	1-216-809-11	s	RESISTOR,CHIP 100 1/10W 1608
R157	1-216-809-11	s	RESISTOR,CHIP 100 1/10W 1608
R158	1-216-809-11	s	RESISTOR,CHIP 100 1/10W 1608
R159	1-216-845-11	s	RESISTOR,CHIP 100K 1/10W(1608)
R160	1-216-805-11	s	RESISTOR,CHIP 47 1/10W 1608
R161	1-216-805-11	s	RESISTOR,CHIP 47 1/10W 1608
R162	1-216-805-11	s	RESISTOR,CHIP 47 1/10W 1608
R163	1-216-845-11	s	RESISTOR,CHIP 100K 1/10W(1608)
R164	1-216-864-11	s	CONDUCTOR, CHIP (1608)
R166	1-216-864-11	s	CONDUCTOR, CHIP (1608)
R168	1-216-864-11	s	CONDUCTOR, CHIP (1608)
R200	1-216-864-11	s	CONDUCTOR, CHIP (1608)
R201	1-216-864-11	s	CONDUCTOR, CHIP (1608)
R202	1-216-864-11	s	CONDUCTOR, CHIP (1608)
R203	1-216-864-11	s	CONDUCTOR, CHIP (1608)
R204	1-216-805-11	s	RESISTOR,CHIP 47 1/10W 1608
R205	1-216-805-11	s	RESISTOR,CHIP 47 1/10W 1608
R206	1-216-813-11	s	RESISTOR, CHIP 220 1/10W 1608
R207	1-218-827-11	s	RESISTOR,CHIP 150 1/10W (1608)
R208	1-218-827-11	s	RESISTOR,CHIP 150 1/10W (1608)
R209	1-218-827-11	s	RESISTOR,CHIP 150 1/10W (1608)
R210	1-218-827-11	s	RESISTOR,CHIP 150 1/10W (1608)
R211	1-218-827-11	s	RESISTOR,CHIP 150 1/10W (1608)
R212	1-218-827-11	s	RESISTOR,CHIP 150 1/10W (1608)
R213	1-216-835-11	s	RESISTOR,CHIP 15K 1/10W
R214	1-216-835-11	s	RESISTOR,CHIP 15K 1/10W
R216	1-216-844-11	s	RESISTOR,CHIP 82K 1/16W 1608
R217	1-216-844-11	s	RESISTOR,CHIP 82K 1/16W 1608
R218	1-216-844-11	s	RESISTOR,CHIP 82K 1/16W 1608
R220	1-218-827-11	s	RESISTOR,CHIP 150 1/10W (1608)
R221	1-218-827-11	s	RESISTOR,CHIP 150 1/10W (1608)
R222	1-218-827-11	s	RESISTOR,CHIP 150 1/10W (1608)
R223	1-218-827-11	s	RESISTOR,CHIP 150 1/10W (1608)
R224	1-218-827-11	s	RESISTOR,CHIP 150 1/10W (1608)
R225	1-218-827-11	s	RESISTOR,CHIP 150 1/10W (1608)
R226	1-216-844-11	s	RESISTOR,CHIP 82K 1/16W 1608
R227	1-216-844-11	s	RESISTOR,CHIP 82K 1/16W 1608
R228	1-216-844-11	s	RESISTOR,CHIP 82K 1/16W 1608
R229	1-216-845-11	s	RESISTOR,CHIP 100K 1/10W(1608)
R313	1-216-797-11	s	RESISTOR,CHIP 10 1/10W 1608
R314	1-216-815-11	s	RESISTOR,CHIP 330 1/10W 1608
R315	1-216-815-11	s	RESISTOR,CHIP 330 1/10W 1608
R316	1-216-815-11	s	RESISTOR,CHIP 330 1/10W 1608
R317	1-216-815-11	s	RESISTOR,CHIP 330 1/10W 1608
R321	1-216-805-11	s	RESISTOR,CHIP 47 1/10W 1608
R326	1-216-803-11	s	RESISTOR,CHIP 33 1/16W (1608)
R329	1-216-805-11	s	RESISTOR,CHIP 47 1/10W 1608
R335	1-216-803-11	s	RESISTOR,CHIP 33 1/16W (1608)
R355	1-218-831-11	s	RESISTOR, CHIP 220 1/10W(1608)
R356	1-216-797-11	s	RESISTOR,CHIP 10 1/10W 1608
R357	1-218-827-11	s	RESISTOR,CHIP 150 1/10W (1608)
R358	1-216-841-11	s	RESISTOR, CHIP 47K 1/10W 1608
R359	1-216-841-11	s	RESISTOR, CHIP 47K 1/10W 1608
R360	1-218-827-11	s	RESISTOR,CHIP 150 1/10W (1608)
R361	1-216-797-11	s	RESISTOR,CHIP 10 1/10W 1608

(Q BOARD)

Ref. No. or Q'ty	Part No.	SP	Description
R362	1-218-831-11	s	RESISTOR, CHIP 220 1/10W(1608)
R363	1-218-831-11	s	RESISTOR, CHIP 220 1/10W(1608)
R364	1-216-841-11	s	RESISTOR, CHIP 47K 1/10W 1608
R365	1-216-797-11	s	RESISTOR,CHIP 10 1/10W 1608
R366	1-218-827-11	s	RESISTOR,CHIP 150 1/10W (1608)
R367	1-216-841-11	s	RESISTOR, CHIP 47K 1/10W 1608
R368	1-218-827-11	s	RESISTOR,CHIP 150 1/10W (1608)
R369	1-216-797-11	s	RESISTOR,CHIP 10 1/10W 1608
R370	1-218-831-11	s	RESISTOR, CHIP 220 1/10W(1608)
R371	1-218-831-11	s	RESISTOR, CHIP 220 1/10W(1608)
R372	1-216-841-11	s	RESISTOR, CHIP 47K 1/10W 1608
R373	1-216-797-11	s	RESISTOR,CHIP 10 1/10W 1608
R374	1-218-827-11	s	RESISTOR,CHIP 150 1/10W (1608)
R375	1-216-841-11	s	RESISTOR, CHIP 47K 1/10W 1608
R376	1-216-797-11	s	RESISTOR,CHIP 10 1/10W 1608
R377	1-218-827-11	s	RESISTOR,CHIP 150 1/10W (1608)
R378	1-216-821-11	s	RESISTOR,CHIP 1.0K 1/10W(1608)
R379	1-218-831-11	s	RESISTOR, CHIP 220 1/10W(1608)
R380	1-216-864-11	s	CONDUCTOR, CHIP (1608)
R381	1-216-864-11	s	CONDUCTOR, CHIP (1608)
R401	1-216-805-11	s	RESISTOR,CHIP 47 1/10W 1608
R402	1-216-797-11	s	RESISTOR,CHIP 10 1/10W 1608
R403	1-216-805-11	s	RESISTOR,CHIP 47 1/10W 1608
R404	1-216-797-11	s	RESISTOR,CHIP 10 1/10W 1608
R405	1-216-801-11	s	RESISTOR,CHIP 22 1/10W (1608)
R406	1-216-797-11	s	RESISTOR,CHIP 10 1/10W 1608
R407	1-216-797-11	s	RESISTOR,CHIP 10 1/10W 1608
R408	1-216-797-11	s	RESISTOR,CHIP 10 1/10W 1608
R409	1-216-797-11	s	RESISTOR,CHIP 10 1/10W 1608
R410	1-216-797-11	s	RESISTOR,CHIP 10 1/10W 1608
R411	1-216-797-11	s	RESISTOR,CHIP 10 1/10W 1608
R412	1-218-837-11	s	RESISTOR,CHIP 390 1/10W (1608)
R413	1-216-833-11	s	RESISTOR,CHIP 10K 1/10W (1608)
R414	1-216-864-11	s	CONDUCTOR, CHIP (1608)
R415	1-216-817-11	s	RESISTOR,CHIP 470 1/10W 1608
R416	1-216-864-11	s	CONDUCTOR, CHIP (1608)
R417	1-216-864-11	s	CONDUCTOR, CHIP (1608)
R420	1-216-864-11	s	CONDUCTOR, CHIP (1608)
R421	1-216-864-11	s	CONDUCTOR, CHIP (1608)
R422	1-216-833-11	s	RESISTOR,CHIP 10K 1/10W (1608)
R424	1-216-809-11	s	RESISTOR,CHIP 100 1/10W 1608
R425	1-216-833-11	s	RESISTOR,CHIP 10K 1/10W (1608)
R426	1-216-809-11	s	RESISTOR,CHIP 100 1/10W 1608
R427	1-216-864-11	s	CONDUCTOR, CHIP (1608)
R429	1-216-805-11	s	RESISTOR,CHIP 47 1/10W 1608
R434	1-216-833-11	s	RESISTOR,CHIP 10K 1/10W (1608)
R435	1-216-864-11	s	CONDUCTOR, CHIP (1608)
R436	1-216-864-11	s	CONDUCTOR, CHIP (1608)
R437	1-216-864-11	s	CONDUCTOR, CHIP (1608)
R443	1-216-864-11	s	CONDUCTOR, CHIP (1608)
R449	1-216-864-11	s	CONDUCTOR, CHIP (1608)
R453	1-216-864-11	s	CONDUCTOR, CHIP (1608)
R455	1-216-833-11	s	RESISTOR,CHIP 10K 1/10W (1608)
R501	1-216-793-11	s	RESISTOR,CHIP 4.7 1/16W 1608
R504	1-216-853-11	s	RESISTOR,CHIP 470K 1/16W(1608)
R505	1-216-825-11	s	RESISTOR,CHIP 2.2K 1/10W 1608
R507	1-216-841-11	s	RESISTOR, CHIP 47K 1/10W 1608
R508	1-216-837-11	s	RESISTOR,CHIP 22K 1/16W 1608
R509	1-216-148-00	s	RESISTOR,CHIP 8.2 1/8W(3216)

(Q BOARD)

Ref. No. or Q'ty	Part No.	SP	Description
R511	1-216-845-11	s	RESISTOR,CHIP 100K 1/10W(1608)
R514	1-216-821-11	s	RESISTOR,CHIP 1.0K 1/10W(1608)
R516	1-216-829-11	s	RESISTOR,CHIP 4.7K 1/10W(1608)
R517	1-216-809-11	s	RESISTOR,CHIP 100 1/10W 1608
R518	1-216-809-11	s	RESISTOR,CHIP 100 1/10W 1608
R519	1-216-821-11	s	RESISTOR,CHIP 1.0K 1/10W(1608)
R520	1-216-809-11	s	RESISTOR,CHIP 100 1/10W 1608
R521	1-216-864-11	s	CONDUCTOR, CHIP (1608)
R522	1-216-864-11	s	CONDUCTOR, CHIP (1608)
R523	1-216-864-11	s	CONDUCTOR, CHIP (1608)
R524	1-216-864-11	s	CONDUCTOR, CHIP (1608)
R525	1-216-821-11	s	RESISTOR,CHIP 1.0K 1/10W(1608)
R526	1-216-833-11	s	RESISTOR,CHIP 10K 1/10W (1608)
R527	1-216-809-11	s	RESISTOR,CHIP 100 1/10W 1608
R528	1-216-809-11	s	RESISTOR,CHIP 100 1/10W 1608
R529	1-216-809-11	s	RESISTOR,CHIP 100 1/10W 1608
R539	1-216-809-11	s	RESISTOR,CHIP 100 1/10W 1608
R540	1-216-838-11	s	RESISTOR CHIP 27K 1/10W(1608)
R541	1-216-834-11	s	RESISTOR,CHIP 12K 1/16W 1608
R542	1-218-867-11	s	RESISTOR,CHIP 6.8K 1/10W(1608)
R543	1-216-828-11	s	RESISTOR, CHIP 3.9K 1/10W 1608
R544	1-216-826-11	s	RESISTOR,CHIP 2.7K 1/10W(1608)
R545	1-216-825-11	s	RESISTOR,CHIP 2.2K 1/10W 1608
R546	1-216-823-11	s	RESISTOR, CHIP 1.5K 1/10W
R547	1-216-824-11	s	RESISTOR, CHIP 1.8K 1/10W 1608
R548	1-216-826-11	s	RESISTOR,CHIP 2.7K 1/10W(1608)
R549	1-216-825-11	s	RESISTOR,CHIP 2.2K 1/10W 1608
R550	1-216-823-11	s	RESISTOR, CHIP 1.5K 1/10W
R551	1-216-824-11	s	RESISTOR, CHIP 1.8K 1/10W 1608
R601	1-216-843-11	s	RESISTOR,CHIP 68K 1/10W (1608)
R602	1-216-843-11	s	RESISTOR,CHIP 68K 1/10W (1608)
R603	1-216-843-11	s	RESISTOR,CHIP 68K 1/10W (1608)
R604	1-216-843-11	s	RESISTOR,CHIP 68K 1/10W (1608)
R605	1-216-843-11	s	RESISTOR,CHIP 68K 1/10W (1608)
R606	1-216-843-11	s	RESISTOR,CHIP 68K 1/10W (1608)
R607	1-216-843-11	s	RESISTOR,CHIP 68K 1/10W (1608)
R608	1-216-843-11	s	RESISTOR,CHIP 68K 1/10W (1608)
R609	1-216-853-11	s	RESISTOR,CHIP 470K 1/16W(1608)
R610	1-216-853-11	s	RESISTOR,CHIP 470K 1/16W(1608)
R611	1-216-853-11	s	RESISTOR,CHIP 470K 1/16W(1608)
R612	1-216-853-11	s	RESISTOR,CHIP 470K 1/16W(1608)
R613	1-216-853-11	s	RESISTOR,CHIP 470K 1/16W(1608)
R614	1-216-853-11	s	RESISTOR,CHIP 470K 1/16W(1608)
R615	1-216-853-11	s	RESISTOR,CHIP 470K 1/16W(1608)
R616	1-216-853-11	s	RESISTOR,CHIP 470K 1/16W(1608)
R617	1-216-809-11	s	RESISTOR,CHIP 100 1/10W 1608
R618	1-216-809-11	s	RESISTOR,CHIP 100 1/10W 1608
R619	1-216-833-11	s	RESISTOR,CHIP 10K 1/10W (1608)
R620	1-216-833-11	s	RESISTOR,CHIP 10K 1/10W (1608)
R621	1-216-809-11	s	RESISTOR,CHIP 100 1/10W 1608
R622	1-216-809-11	s	RESISTOR,CHIP 100 1/10W 1608
R623	1-216-829-11	s	RESISTOR,CHIP 4.7K 1/10W(1608)
R624	1-216-829-11	s	RESISTOR,CHIP 4.7K 1/10W(1608)
R625	1-216-826-11	s	RESISTOR,CHIP 2.7K 1/10W(1608)
R626	1-216-826-11	s	RESISTOR,CHIP 2.7K 1/10W(1608)
R627	1-216-821-11	s	RESISTOR,CHIP 1.0K 1/10W(1608)
R628	1-216-821-11	s	RESISTOR,CHIP 1.0K 1/10W(1608)
R629	1-216-821-11	s	RESISTOR,CHIP 1.0K 1/10W(1608)
R630	1-216-821-11	s	RESISTOR,CHIP 1.0K 1/10W(1608)

(Q BOARD)

Ref. No. or Q'ty	Part No.	SP	Description
R631	1-216-853-11	s	RESISTOR,CHIP 470K 1/16W(1608)
R632	1-216-853-11	s	RESISTOR,CHIP 470K 1/16W(1608)
R633	1-216-821-11	s	RESISTOR,CHIP 1.0K 1/10W(1608)
R634	1-216-821-11	s	RESISTOR,CHIP 1.0K 1/10W(1608)
R635	1-216-821-11	s	RESISTOR,CHIP 1.0K 1/10W(1608)
R636	1-216-809-11	s	RESISTOR,CHIP 100 1/10W 1608
R637	1-216-809-11	s	RESISTOR,CHIP 100 1/10W 1608
R638	1-216-845-11	s	RESISTOR,CHIP 100K 1/10W(1608)
R639	1-216-845-11	s	RESISTOR,CHIP 100K 1/10W(1608)
R640	1-216-845-11	s	RESISTOR,CHIP 100K 1/10W(1608)
R641	1-216-845-11	s	RESISTOR,CHIP 100K 1/10W(1608)
R701	1-218-863-11	s	RESISTOR,CHIP 4.7K 1/10W(1608)
R702	1-216-864-11	s	CONDUCTOR, CHIP (1608)
R703	1-216-864-11	s	CONDUCTOR, CHIP (1608)
R704	1-216-864-11	s	CONDUCTOR, CHIP (1608)
R705	1-216-864-11	s	CONDUCTOR, CHIP (1608)
R706	1-216-864-11	s	CONDUCTOR, CHIP (1608)
R707	1-216-833-11	s	RESISTOR,CHIP 10K 1/10W (1608)
R708	1-216-833-11	s	RESISTOR,CHIP 10K 1/10W (1608)
R709	1-216-864-11	s	CONDUCTOR, CHIP (1608)
R710	1-216-805-11	s	RESISTOR,CHIP 47 1/10W 1608
R711	1-216-809-11	s	RESISTOR,CHIP 100 1/10W 1608
R712	1-216-864-11	s	CONDUCTOR, CHIP (1608)
R713	1-216-864-11	s	CONDUCTOR, CHIP (1608)
R714	1-216-864-11	s	CONDUCTOR, CHIP (1608)
R715	1-216-864-11	s	CONDUCTOR, CHIP (1608)
R716	1-216-864-11	s	CONDUCTOR, CHIP (1608)
R717	1-216-864-11	s	CONDUCTOR, CHIP (1608)
R718	1-216-864-11	s	CONDUCTOR, CHIP (1608)
R800	1-216-803-11	s	RESISTOR,CHIP 33 1/16W (1608)
R801	1-216-864-11	s	CONDUCTOR, CHIP (1608)
R802	1-216-809-11	s	RESISTOR,CHIP 100 1/10W 1608
R803	1-216-809-11	s	RESISTOR,CHIP 100 1/10W 1608
R804	1-216-809-11	s	RESISTOR,CHIP 100 1/10W 1608
R805	1-216-809-11	s	RESISTOR,CHIP 100 1/10W 1608
R806	1-216-809-11	s	RESISTOR,CHIP 100 1/10W 1608
R807	1-216-809-11	s	RESISTOR,CHIP 100 1/10W 1608
R808	1-216-864-11	s	CONDUCTOR, CHIP (1608)
R813	1-208-751-11	s	RESISTOR,CHIP 51 1/10W (2012)
R814	1-208-751-11	s	RESISTOR,CHIP 51 1/10W (2012)
R815	1-208-751-11	s	RESISTOR,CHIP 51 1/10W (2012)
R816	1-208-751-11	s	RESISTOR,CHIP 51 1/10W (2012)
R824	1-218-285-11	s	RESISTOR,CHIP 75 1/16W (1608)
R825	1-218-285-11	s	RESISTOR,CHIP 75 1/16W (1608)
R826	1-218-285-11	s	RESISTOR,CHIP 75 1/16W (1608)
R827	1-218-285-11	s	RESISTOR,CHIP 75 1/16W (1608)
R828	1-218-285-11	s	RESISTOR,CHIP 75 1/16W (1608)
R829	1-218-285-11	s	RESISTOR,CHIP 75 1/16W (1608)
R830	1-218-851-11	s	RESISTOR,CHIP 1.5K 1/10W(1608)
R831	1-218-869-11	s	RESISTOR,CHIP 8.2K 1/10W(1608)
R901	1-216-833-11	s	RESISTOR,CHIP 10K 1/10W (1608)
R903	1-216-803-11	s	RESISTOR,CHIP 33 1/16W (1608)
R905	1-216-829-11	s	RESISTOR,CHIP 4.7K 1/10W(1608)
R906	1-216-833-11	s	RESISTOR,CHIP 10K 1/10W (1608)
R909	1-216-833-11	s	RESISTOR,CHIP 10K 1/10W (1608)
R911	1-216-864-11	s	CONDUCTOR, CHIP (1608)
R913	1-216-833-11	s	RESISTOR,CHIP 10K 1/10W (1608)
R914	1-216-809-11	s	RESISTOR,CHIP 100 1/10W 1608
R919	1-216-833-11	s	RESISTOR,CHIP 10K 1/10W (1608)

(Q BOARD)

Ref. No. or Q'ty	Part No.	SP	Description
R920	1-216-809-11	s	RESISTOR,CHIP 100 1/10W 1608
R921	1-216-809-11	s	RESISTOR,CHIP 100 1/10W 1608
R922	1-216-833-11	s	RESISTOR,CHIP 10K 1/10W (1608)
R923	1-216-833-11	s	RESISTOR,CHIP 10K 1/10W (1608)
RB401	1-233-575-11	s	RES, CHIP NETWORK 22
RB402	1-233-575-11	s	RES, CHIP NETWORK 22
RB403	1-233-575-11	s	RES, CHIP NETWORK 22
RB404	1-233-575-11	s	RES, CHIP NETWORK 22
RB405	1-233-575-11	s	RES, CHIP NETWORK 22
RB406	1-233-575-11	s	RES, CHIP NETWORK 22
RB407	1-233-575-11	s	RES, CHIP NETWORK 22
RB408	1-233-575-11	s	RES, CHIP NETWORK 22
RB409	1-233-575-11	s	RES, CHIP NETWORK 22
RB410	1-233-575-11	s	RES, CHIP NETWORK 22
RB411	1-233-575-11	s	RES, CHIP NETWORK 22
RB412	1-233-575-11	s	RES, CHIP NETWORK 22
S540	1-570-909-11	s	SWITCH, TACTILE (REFLOW TYPE) (LEFT)
S541	1-570-909-11	s	SWITCH, TACTILE (REFLOW TYPE) (RIGHT)
S542	1-570-909-11	s	SWITCH, TACTILE (REFLOW TYPE) (DOWN)
S543	1-570-909-11	s	SWITCH, TACTILE (REFLOW TYPE) (UP)
S544	1-570-909-11	s	SWITCH, TACTILE (REFLOW TYPE) (ENTER)
S545	1-570-909-11	s	SWITCH, TACTILE (REFLOW TYPE) (MENU)
S546	1-572-595-11	s	SWITCH,TACTILE (REFLOW TYPE) (INPUT)
S547	1-572-595-11	s	SWITCH,TACTILE (REFLOW TYPE) (POWER)
S548	1-570-909-11	s	SWITCH, TACTILE (REFLOW TYPE) (APA)
S549	1-570-909-11	s	SWITCH, TACTILE (REFLOW TYPE) (VOL-)
S550	1-570-909-11	s	SWITCH, TACTILE (REFLOW TYPE) (VOL+)
S551	1-570-909-11	s	SWITCH, TACTILE (REFLOW TYPE) (RESET)
T800	1-433-893-11	s	TRANSFORMER, PULSE
TH701	1-803-382-11	s	THERMISTOR (10K)
TP103	1-535-757-11	s	CHIP, CHECKER (CONNECTOR)
TP104	1-535-757-11	s	CHIP, CHECKER (CONNECTOR)
TP105	1-535-757-11	s	CHIP, CHECKER (CONNECTOR)
TP110	1-535-757-11	s	CHIP, CHECKER (CONNECTOR)
TP111	1-535-757-11	s	CHIP, CHECKER (CONNECTOR)
TP800	1-535-757-11	s	CHIP, CHECKER (CONNECTOR)
X900	1-781-345-11	s	OSCILLATOR, CRYSTAL(25MHz)

U BOARD

Ref. No. or Q'ty	Part No.	SP	Description
1pc	⚠ A-1401-529-A	s	MOUNTED CIRCUIT BOARD, U
CN1	1-770-619-11	o	PIN, CONNECTOR 2P
S1	⚠ 1-570-504-12	s	SWITCH, MICRO

V BOARD

Ref. No. or Q'ty	Part No.	SP	Description
1pc	⚠ A-1401-530-B	s	MOUNTED CIRCUIT BOARD, V
CN3	1-770-620-21	s	PIN, CONNECTOR 3P
S2	1-570-504-12	s	SWITCH, MICRO

SUPPLIED ACCESSORIES

Ref. No. or Q'ty	Part No.	SP	Description
1pc	⚠	s	See 1-5 Warning on Power Connection (page1-12)
1pc	⚠ 1-476-743-22	s	REMOTE COMMANDER (RM-PJM16)
1pc	9-885-010-98	s	COVER, BATTERY (FOR REMOTE COMMANDER RM-PJM16)
1pc	1-790-081-31	s	CABLE, USB
1pc	1-791-992-31	s	CABLE ASSY(15PDSUBCONNECTORX2)
1pc	4-090-532-02	s	OPERATING INSTRUCTIONS (JAPANESE, SIMPLIFIED CHINESE)
1pc	4-090-532-12	s	OPERATING INSTRUCTIONS (ENGLISH, FRENCH, SPANISH)
1pc	4-090-532-22	s	OPERATING INSTRUCTIONS (GERMAN, ITALIAN)
1pc	4-090-533-03	s	INSTRUCTION MANUAL FOR DEALERS (JAPANESE, ENGLISH, FRENCH, SPANISH, GERMAN, ITALIAN, SIMPLIFIED CHINESE)

Section 5
Block Diagrams

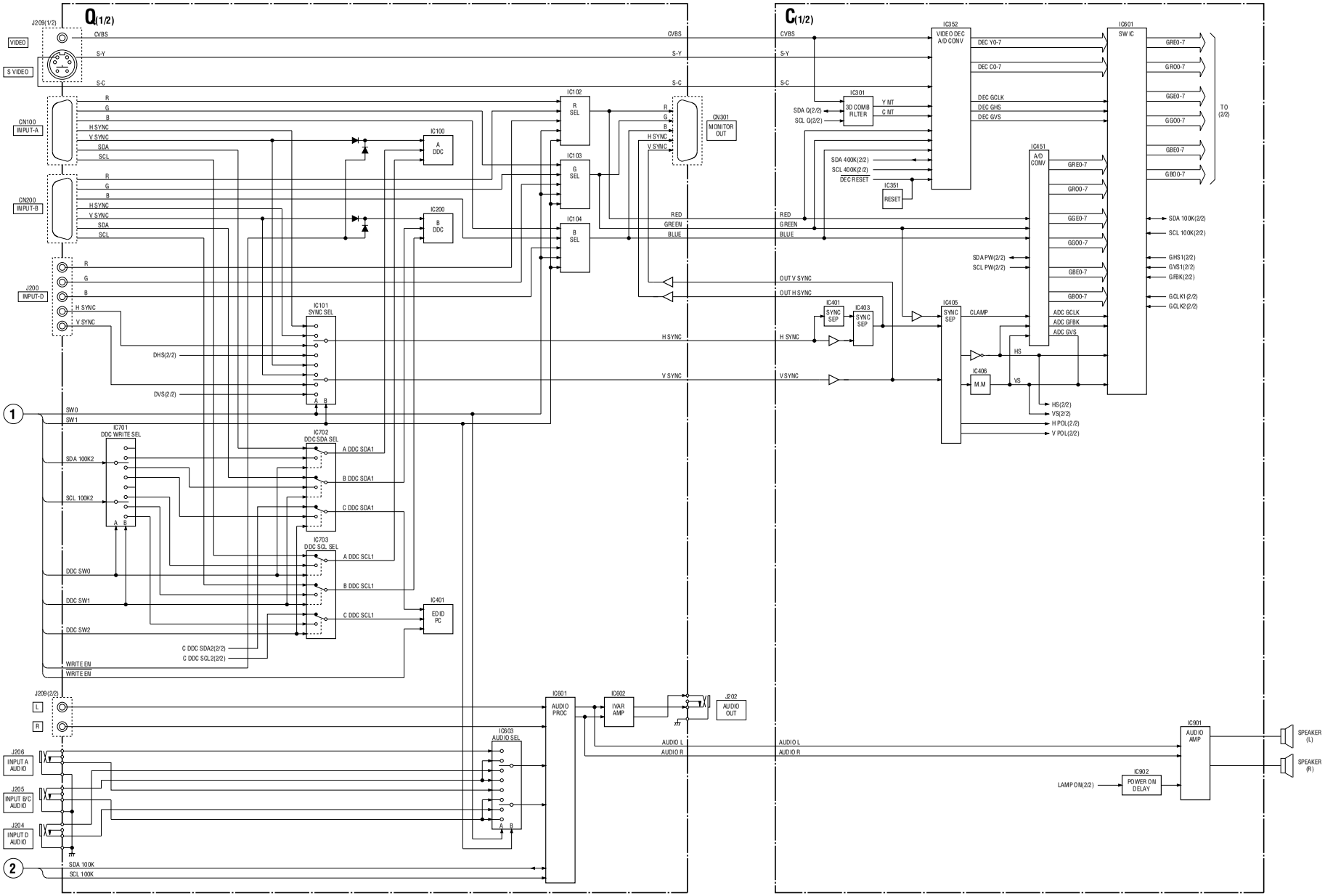

Overall (2/2) Overall (2/2)

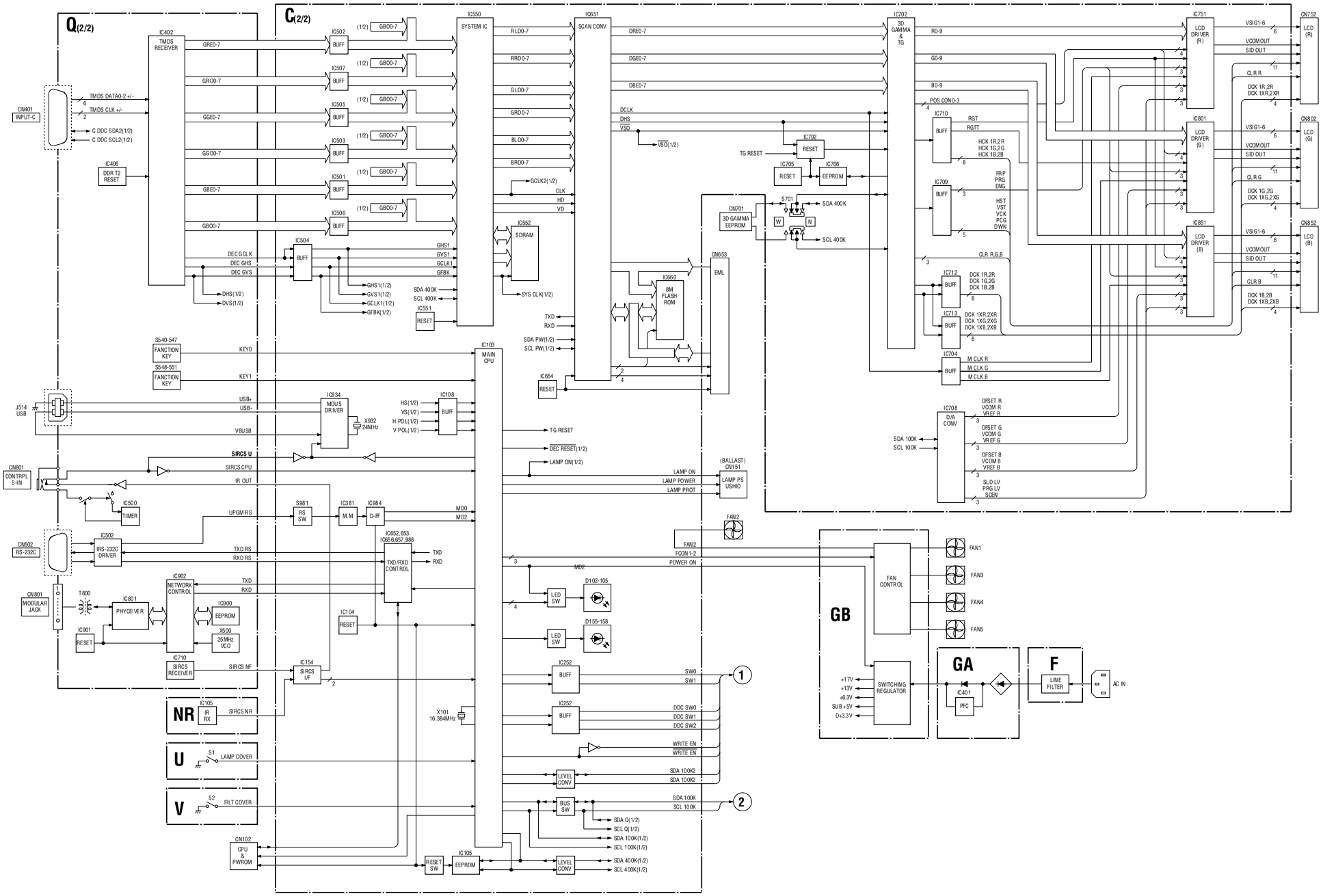

 C (1/5), Q (1/4)

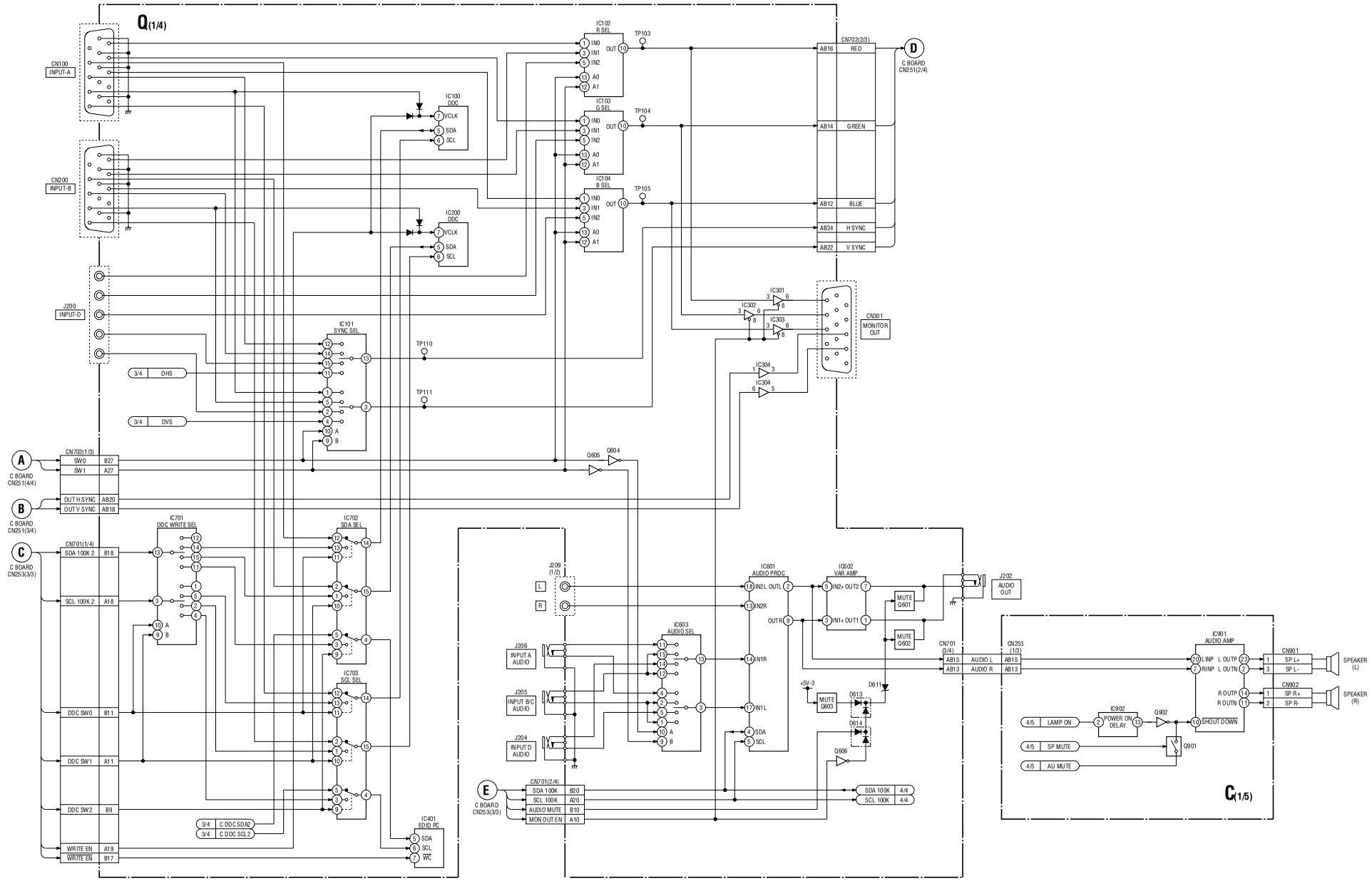
Q(1/4)
CN100
INPUT-A
CN200
INPUT-B
J200
INPUT-D
IC100
DDC
IC200
DDC
IC102
R SEL
IC103
G SEL
IC104
B SEL
TP103
TP104
TP105
CN702(2/3)
AB16 RED
AB14 GREEN
AB12 BLUE
AB24 H SYNC
AB22 V SYNC
D
C BOARD
CN251(2/4)
IC301
IC302
IC303
IC304
CN901
MONITOR OUT
IC101
SYNC SEL
TP110
TP111
3/4 DHS
3/4 DVS
Q605
Q604
A
C BOARD
CN251(4/4)
B
C BOARD
CN251(3/4)
C
C BOARD
CN253(3/3)
CN702(1/3)
SW0 B27
SW1 A27
OUT H SYNC AB20
OUT V SYNC AB18
CN701(1/4)
SDA 100K 2 B18
SCL 100K 2 A18
DDC SW0 B11
DDC SW1 A11
DDC SW2 B9
WRITE EN A19
WRITE EN B17
IC701
DDC WRITE SEL
IC702
SDA SEL
IC703
SCL SEL
3/4 C DDC SDA2
3/4 C DDC SCL2
IC401
EDID PC
J209
(1/2)
L
R
J206
INPUT A AUDIO
J205
INPUT B/C AUDIO
J204
INPUT D AUDIO
IC603
AUDIO SEL
IC601
AUDIO PROC
IN2L OUTL
IN2R
OUTR
IN1R
IN1L
SDA
SCL
IC602
VAR AMP
IN2+ OUT2
IN1+ OUT1
MUTE Q601
MUTE Q602
MUTE Q603
+5V-3
D613
D614
D611
Q606
J202
AUDIO OUT
CN701
(3/4)
AB15 AUDIO L
AB13 AUDIO R
CN253
(1/3)
AB15
AB13
IC901
AUDIO AMP
L INP
RINP
L OUTP
L OUTN
R OUTP
R OUTN
SHOUT DOWN
CN901
SP L+
SP L-
SPEAKER (L)
CN902
SP R+
SP R-
SPEAKER (R)
IC902
POWER ON DELAY
Q902
Q901
4/5 LAMP ON
4/5 SP MUTE
4/5 AU MUTE
E
C BOARD
CN253(3/3)
CN701(2/4)
SDA 100K B20
SCL 100K A20
AUDIO MUTE B10
MON OUT EN A10
SDA 100K 4/4
SCL 100K 4/4
C(1/5)

 5-3

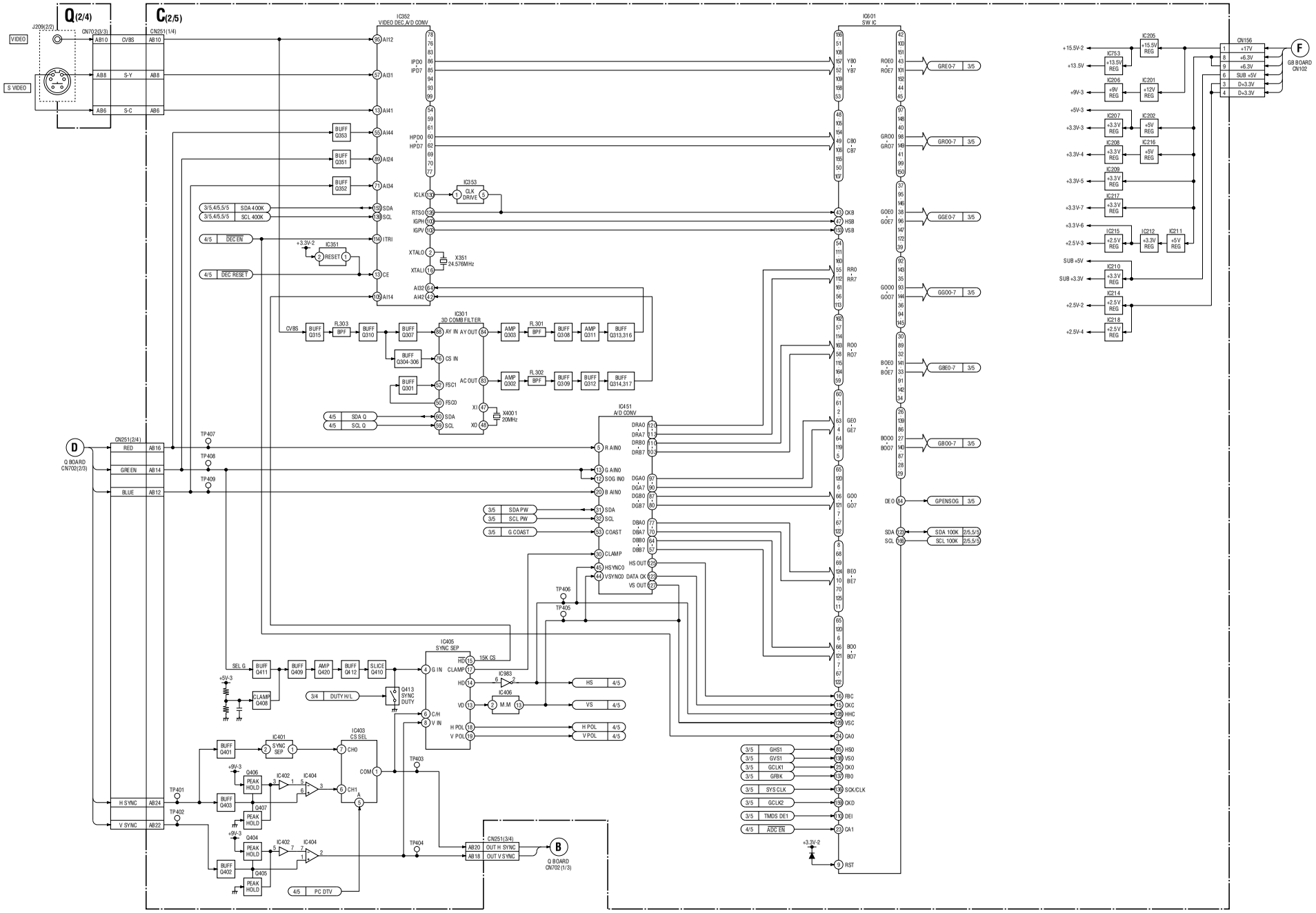
Q(2/4)
C(2/5)
VIDEO
S VIDEO
CN702(2/3)
CN251(1/4)
CVBS
S-Y
S-C
IC352
VIDEO DEC A/D CONV
IC501
SW IC
IC301
3D COMB FILTER
IC451
A/D CONV
IC405
SYNC SEP
IC403
CS SEL
IC401
SYNC SEP
IC353
CLK DRIVE
X351
24.576MHz
X4001
20MHz
IC351
RESET
CN251(2/4)
RED
GREEN
BLUE
H SYNC
V SYNC
D
Q BOARD
CN702(2/3)
CN251(3/4)
OUT H SYNC
OUT V SYNC
B
Q BOARD
CN702(1/3)
CN156
GB BOARD
CN102
F
SDA 400K
SCL 400K
DEC EN
DEC RESET
SDA Q
SCL Q
SDA PW
SCL PW
G COAST
DUTY H/L
PC DTV
SDA 100K
SCL 100K
GPENSOG
ADC EN
TMDS DE1
SYS CLK
GCLK1
GCLK2
GFBK
GHS1
GVS1
+17V
+6.3V
+6.3V
SUB +5V
D+3.3V
D-3.3V

5-4

C (3/5), Q (3/4)

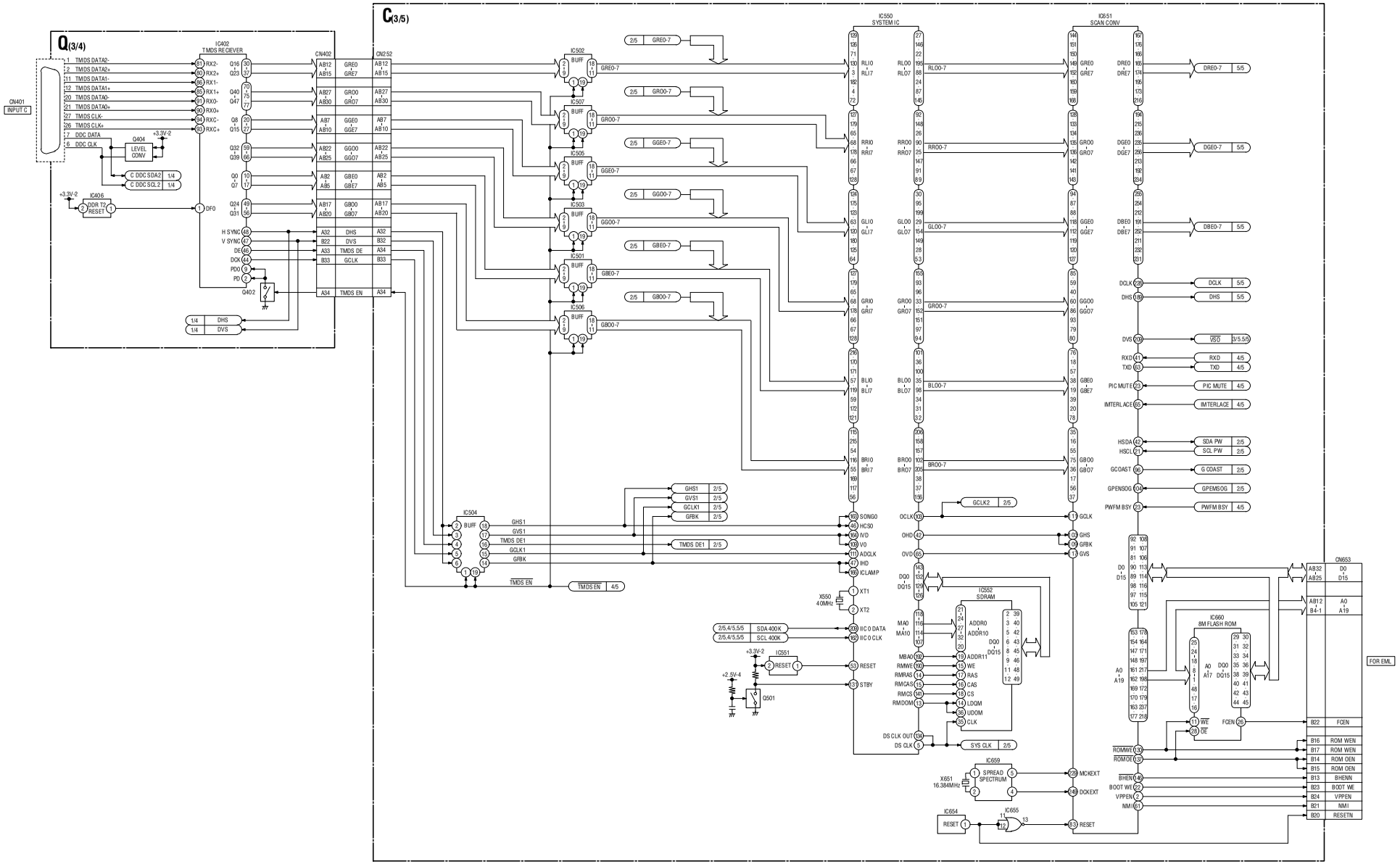
Q(3/4)
C(3/5)
CN401
INPUT C
IC402
TMDS RECIEVER
CN402
CN2:52
IC550
SYSTEM IC
IC551
SCAN CONV
IC552
SDRAM
IC660
8M FLASH ROM
CN653
FOR EML
IC504
IC502
IC507
IC505
IC503
IC501
IC506
IC659
IC654
IC655
IC406
Q404
Q402
Q501
X550
4.0MHz
X651
16.384MHz
TMDS DATA2-
TMDS DATA2+
TMDS DATA1-
TMDS DATA1+
TMDS DATA0-
TMDS DATA0+
TMDS CLK-
TMDS CLK+
DDC DATA
DDC CLK
LEVEL CONV
C DDC SDA2
C DDC SCL2
DDR T2 RESET
H SYNC
V SYNC
DE
DCK
PDO
PD
DHS
DVS
TMDS DE
GCLK
TMDS EN
SDA 400K
SCL 400K
SPREAD SPECTRUM
RESET
SYS CLK
MCKEXT
DCKEXT
DGEO-7
DBEO-7
DCLK
VSO
RXD
TXD
PIC MUTE
IMTERLACE
SDA PW
SCL PW
G COAST
GPENSOG
PWFM BSY
ROM WEN
ROM OEN
BHENN
BOOT WE
VPPEN
NMI
RESETN
FCEN

C (4/5), Q (4/4), U, V, NR

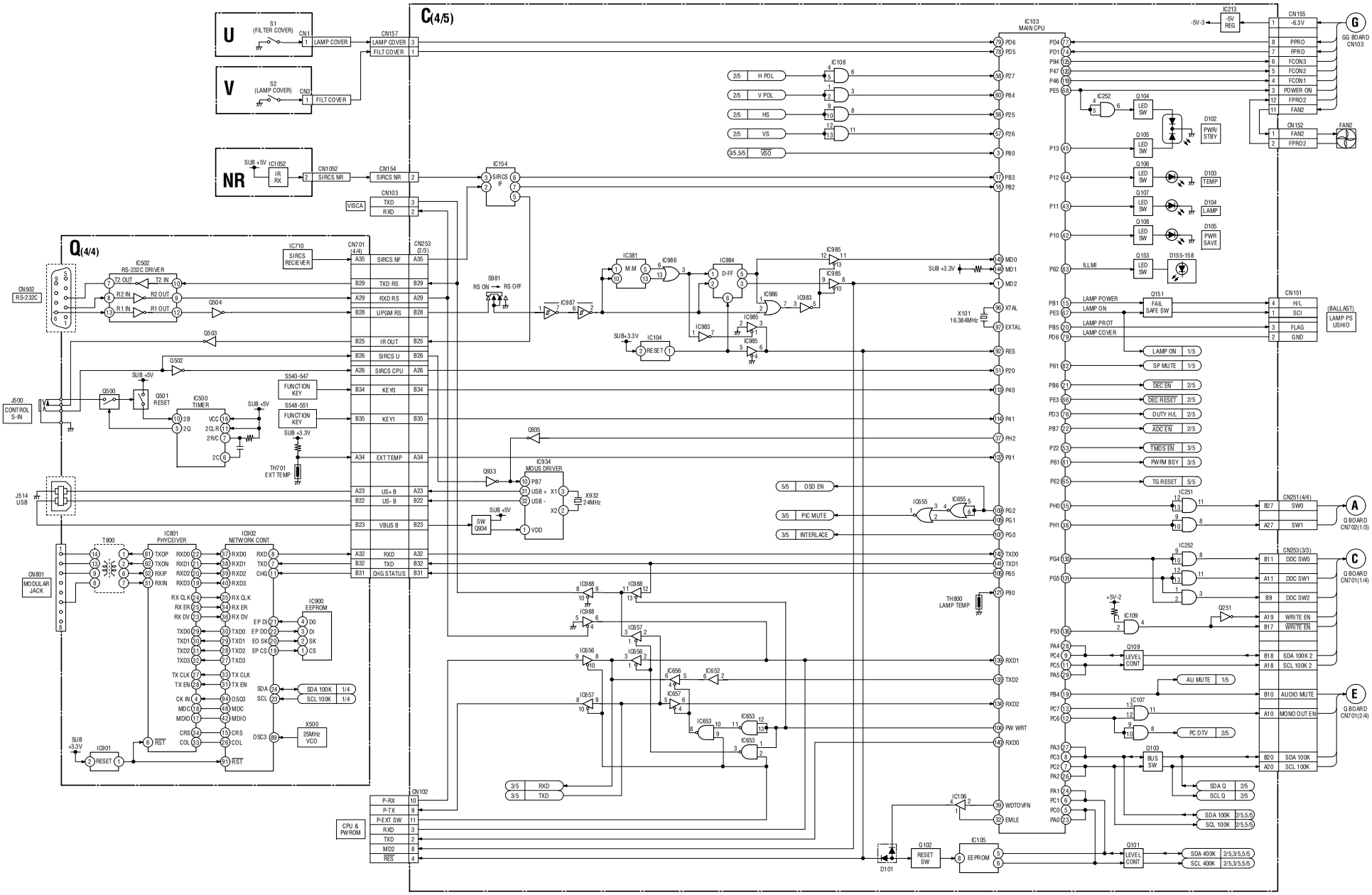

5-6

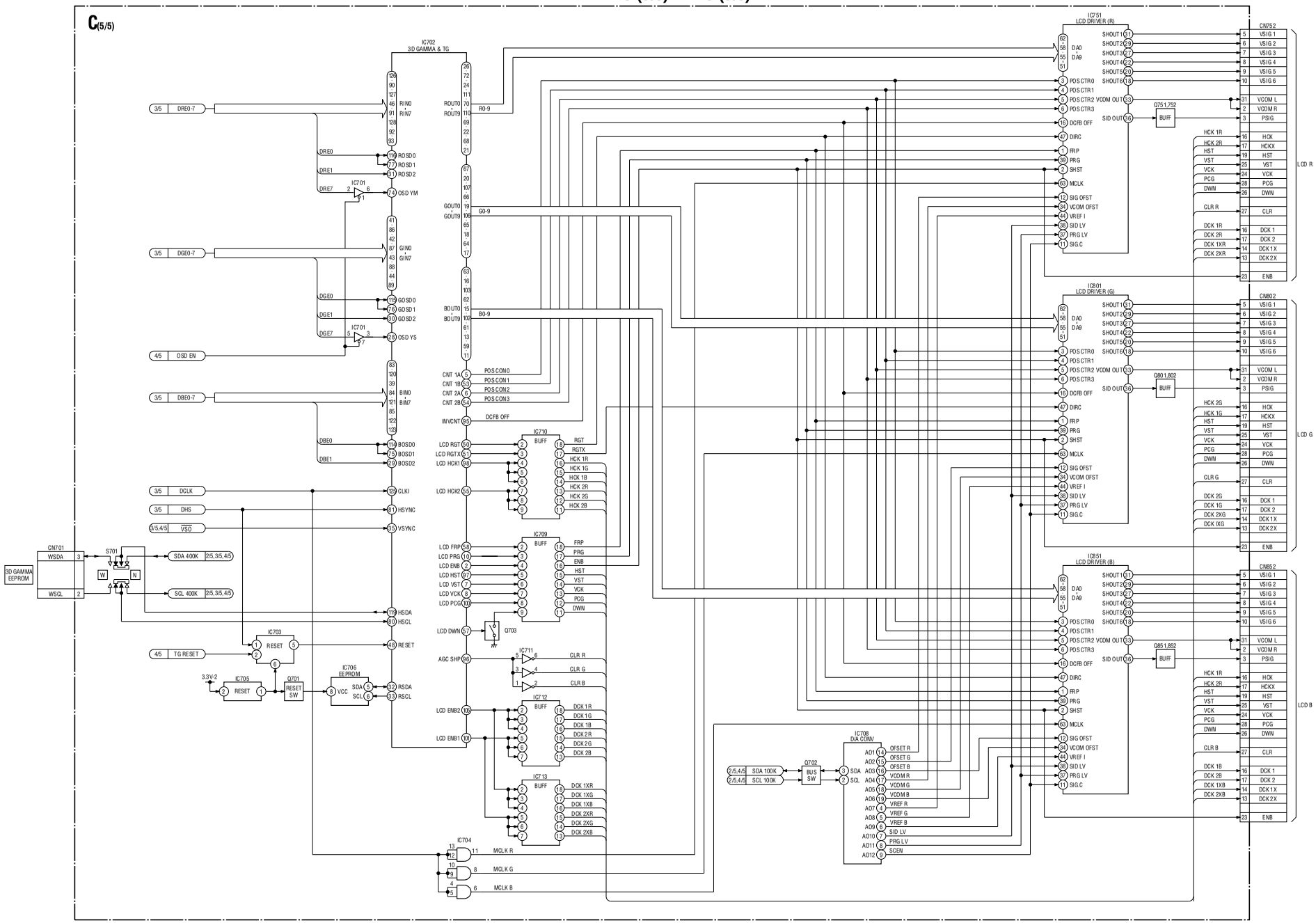
C(5/5)
IC702
3D GAMMA & TG
IC751
LCD DRIVER (R)
IC801
LCD DRIVER (G)
IC851
LCD DRIVER (B)
CN752
CN802
CN852
LCD R
LCD G
LCD B
CN701
3D GAMMA EEPROM
S701
IC703
IC705
IC706
EEPROM
Q701
RESET SW
IC704
IC710
IC709
IC711
IC712
IC713
Q703
IC708
D/A CONV
Q702
BUS SW
Q751,752
Q801,802
Q851,852
BUFF
IC701
SDA 400K
SCL 400K
SDA 100K
SCL 100K
3.3V-2
DRE0-7
DGE0-7
DBE0-7
OSD EN
DCLK
DHS
VSO
TG RESET
MCLK R
MCLK G
MCLK B

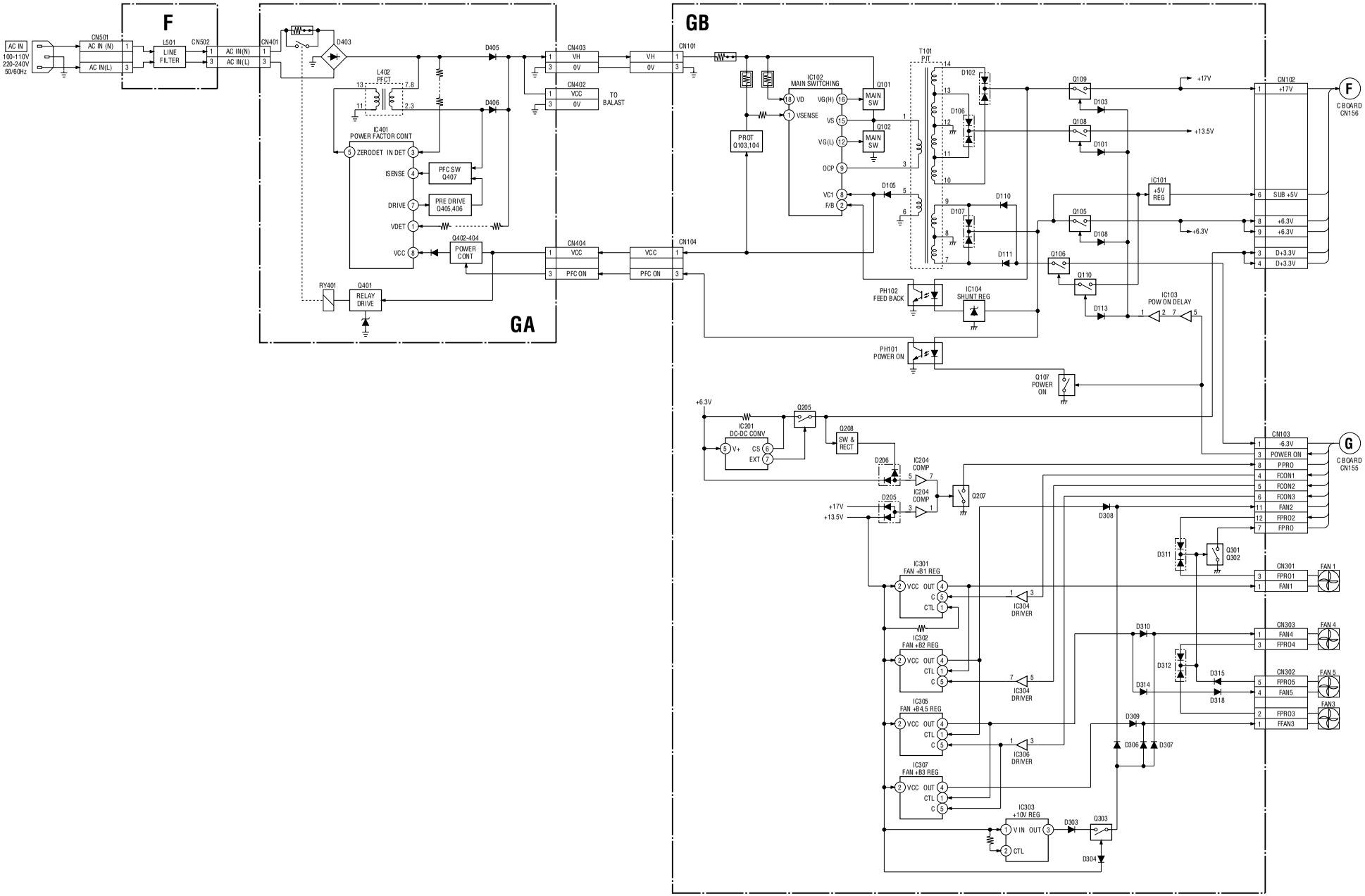
F
GA
GB
AC IN
100-110V
220-240V
50/60Hz
CN501
AC IN (N)
AC IN(L)
L501
LINE FILTER
CN502
AC IN(N)
AC IN(L)
CN401
D403
D405
D406
L402
PFCT
IC401
POWER FACTOR CONT
ZERODET
IN DET
ISENSE
DRIVE
VDET
VCC
PFC SW Q407
PRE DRIVE Q405,406
Q402-404
POWER CONT
RY401
Q401
RELAY DRIVE
CN403
VH
0V
CN402
VCC
0V
TO BALAST
CN404
VCC
PFC ON
CN101
CN104
IC102
MAIN SWITCHING
VD
VSENSE
VG(H)
VS
VG(L)
OCP
VC1
F/B
Q101
Q102
MAIN SW
PROT Q103,104
D105
T101
PIT
D102
D106
D107
D110
D111
Q109
Q108
Q105
Q106
Q110
D103
D101
D108
D113
+17V
+13.5V
+6.3V
IC101
+5V REG
PH102
FEED BACK
IC104
SHUNT REG
IC103
POW ON DELAY
PH101
POWER ON
Q107
POWER ON
CN102
+17V
SUB +5V
+6.3V
D+3.3V
F
C BOARD
CN156
IC201
DC-DC CONV
V+
CS
EXT
Q205
Q208
SW & RECT
D206
D205
IC204
COMP
Q207
D308
CN103
-6.3V
POWER ON
PPRO
FCON1
FCON2
FCON3
FAN2
FPRO2
FPRO
G
C BOARD
CN155
D311
Q301
Q302
IC301
FAN +B1 REG
VCC
OUT
C
CTL
IC304
DRIVER
CN301
FPRO1
FAN1
FAN 1
IC302
FAN +B2 REG
D310
D312
D314
D315
D318
CN303
FAN4
FPRO4
FAN 4
CN302
FPRO5
FAN5
FAN 5
IC305
FAN +B4,5 REG
IC306
DRIVER
D309
D306
D307
FPRO3
FFAN3
FAN3
IC307
FAN +B3 REG
IC303
+10V REG
VIN
OUT
CTL
D303
Q303
D304

Section 6
Diagrams

Note:

- Parts marked " * " differ according to the model/destination. Refer to the mount table for each function.
- The parts marked " # " on schematic diagrams are not mounted.
- All capacitors are in µF unless otherwise noted. pF: µµF 50WV or less are not indicated except for electrolytics.
- All electrolytics are in 50 V unless otherwise specified.
- : fusible resistor
- : nonflammable resistor
- Δ : internal component
- : panel designation and adjustment for repair
- Caution when replacing chip parts
  New parts must be attached after removal of the chip.
  Be careful not to heat the minus side of a tantalum capacitor, because it is easily damaged by the heat.

Reference information

RESISTOR	RN	: METAL FILM
	RC	: SOLID
	FPRD	: NONFLAMMABLE CARBON
	FUSE	: NONFLAMMABLE FUSIBLE
	RS	: NONFLAMMABLE METAL OXIDE
	RB	: NONFLAMMABLE CEMENT
	RW	: NONFLAMMABLE WIREWOUND
	※	: ADJUSTMENT RESISTOR
COIL	LF-8L	: MICRO INDUCTOR
CAPACITOR	TA	: TANTALUM
	PS	: STYROL
	PP	: POLYPROPYLENE
	PT	: MYLAR
	MPS	: METALIZED POLYESTER
	MPP	: METALIZED POLYPROPYLENE
	ALB	: BIPOLAR
	ALT	: HIGH TEMPERATURE
	ALR	: HIGH RIPPLE

[Measuring conditions, voltage and waveform]

- A voltage value is the reference value between the measurement point and the earth, when the NTSC color bar signal (100%) is received from the color bar generator. (digital multi-meter used: 10 M ohms/V DC)
- Unit of voltage is V (volt).
- : B+line
- : B– line
  (Voltage variations may occur due to normal production tolerances.)
- No mark : NTSC (3.58 MHz) color bar signal.
- ☆ : Measurement disabled.
- Circled numbers indicate the reference waveform.
- : Signal path.

The components identified marked ⚠ are critical for safety.
Replace only with the part number specified.

Les composants identifiés par la marque ⚠ sont critiques pour la sécurité.
Ne les remplacer que par une pièce portant le numéro spécifié.

6-1

6-1. Frame Schematic Diagrams

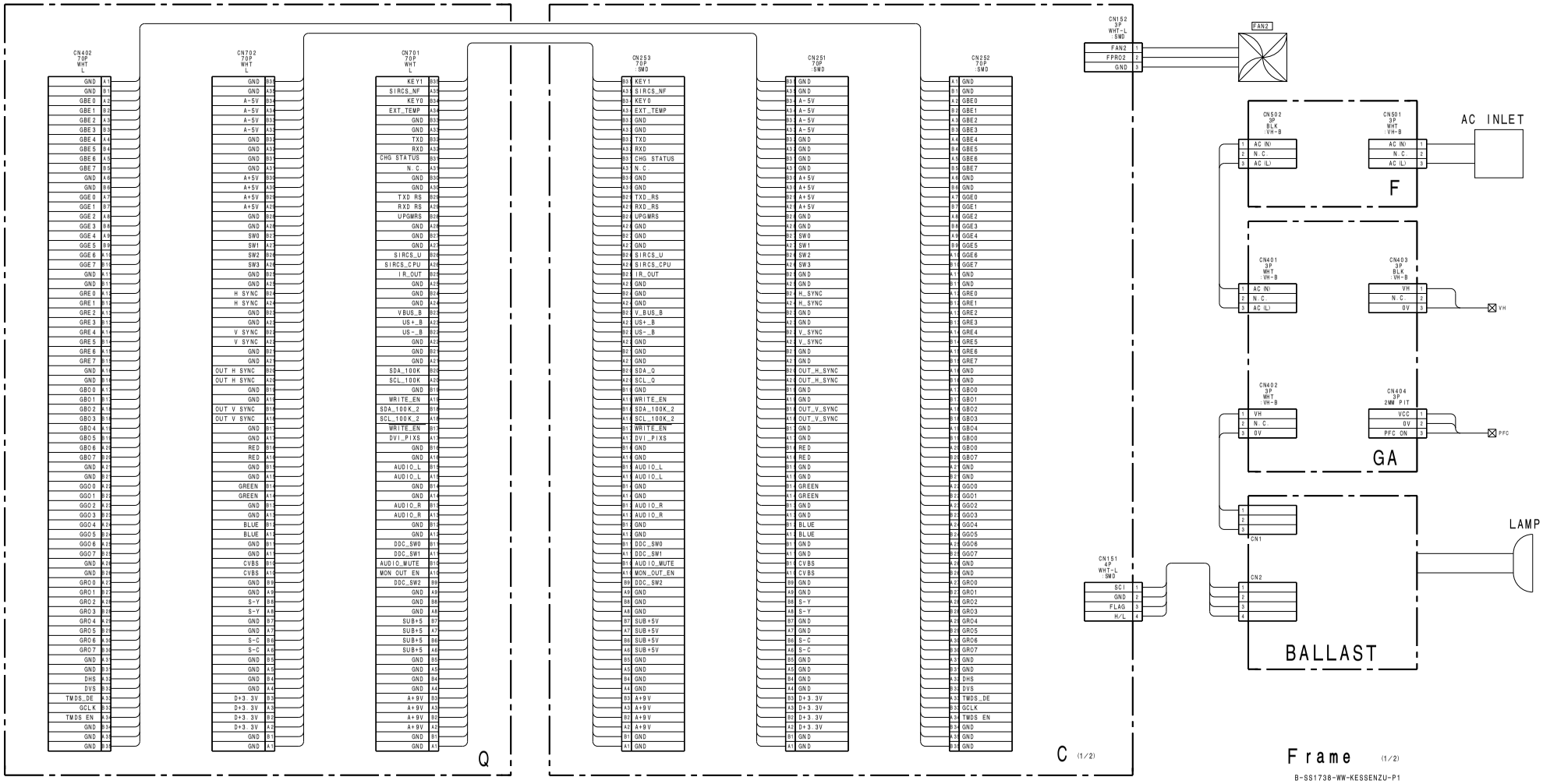

 Frame (2/2)

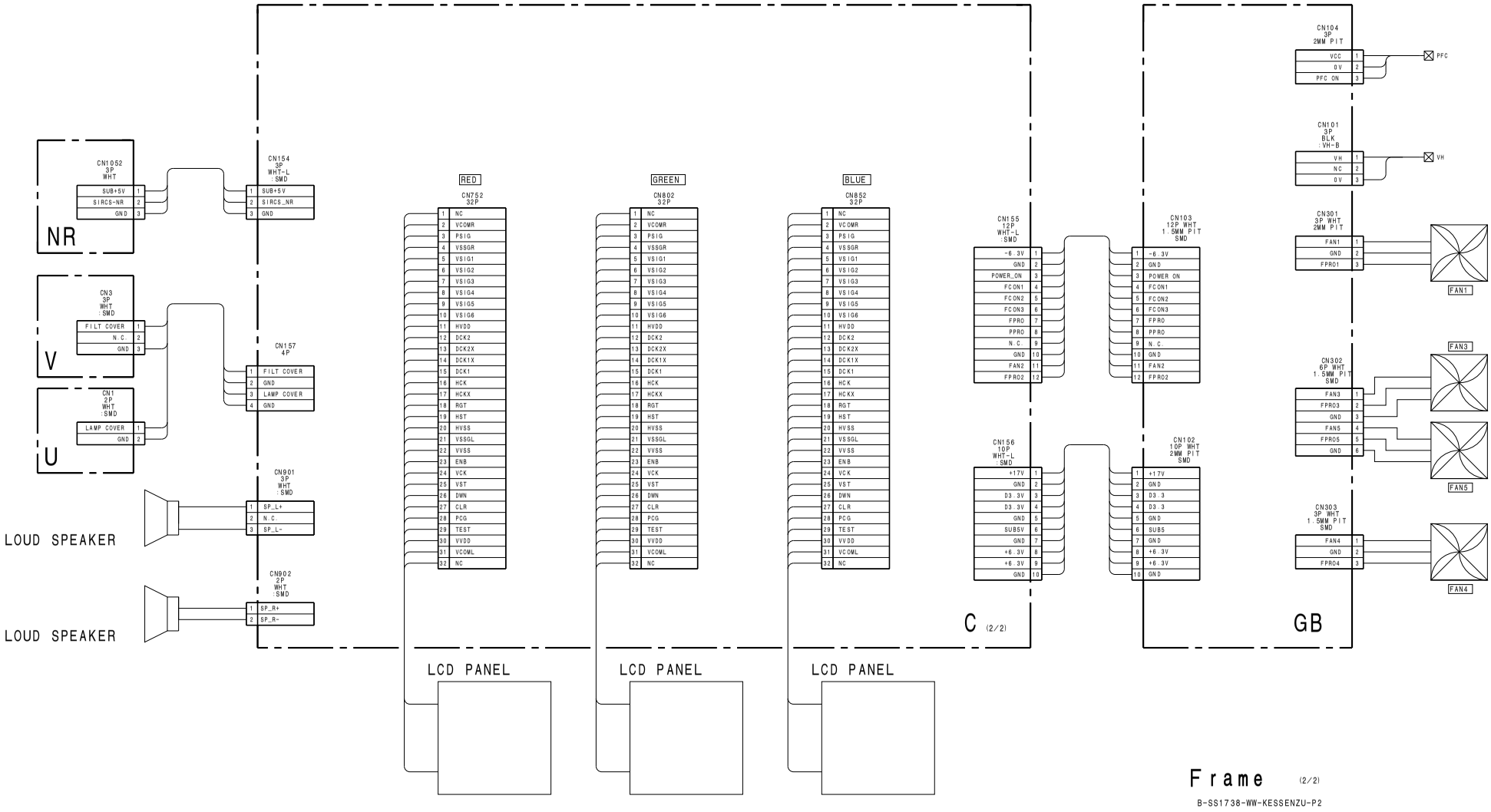
NR
CN1052 3P WHT
SUB+5V 1
SIRCS-NR 2
GND 3
CN154 3P WHT-L :SMD
1 SUB+5V
2 SIRCS_NR
3 GND
V
CN3 3P WHT :SMD
FILT COVER 1
N.C. 2
GND 3
CN157 4P
1 FILT COVER
2 GND
3 LAMP COVER
4 GND
U
CN1 2P WHT :SMD
LAMP COVER 1
GND 2
CN901 3P WHT :SMD
1 SP_L+
2 N.C.
3 SP_L-
LOUD SPEAKER
CN902 2P WHT :SMD
1 SP_R+
2 SP_R-
LOUD SPEAKER
RED
CN752 32P
1 NC
2 VCOMR
3 PSIG
4 VSSGR
5 VSIG1
6 VSIG2
7 VSIG3
8 VSIG4
9 VSIG5
10 VSIG6
11 HVDD
12 DCK2
13 DCK2X
14 DCK1X
15 DCK1
16 HCK
17 HCKX
18 RGT
19 HST
20 HVSS
21 VSSGL
22 VVSS
23 ENB
24 VCK
25 VST
26 DWN
27 CLR
28 PCG
29 TEST
30 VVDD
31 VCOML
32 NC
GREEN
CN802 32P
1 NC
2 VCOMR
3 PSIG
4 VSSGR
5 VSIG1
6 VSIG2
7 VSIG3
8 VSIG4
9 VSIG5
10 VSIG6
11 HVDD
12 DCK2
13 DCK2X
14 DCK1X
15 DCK1
16 HCK
17 HCKX
18 RGT
19 HST
20 HVSS
21 VSSGL
22 VVSS
23 ENB
24 VCK
25 VST
26 DWN
27 CLR
28 PCG
29 TEST
30 VVDD
31 VCOML
32 NC
BLUE
CN852 32P
1 NC
2 VCOMR
3 PSIG
4 VSSGR
5 VSIG1
6 VSIG2
7 VSIG3
8 VSIG4
9 VSIG5
10 VSIG6
11 HVDD
12 DCK2
13 DCK2X
14 DCK1X
15 DCK1
16 HCK
17 HCKX
18 RGT
19 HST
20 HVSS
21 VSSGL
22 VVSS
23 ENB
24 VCK
25 VST
26 DWN
27 CLR
28 PCG
29 TEST
30 VVDD
31 VCOML
32 NC
CN155 12P WHT-L :SMD
-6.3V 1
GND 2
POWER_ON 3
FCON1 4
FCON2 5
FCON3 6
FPRO 7
PPRO 8
N.C. 9
GND 10
FAN2 11
FPRO2 12
CN156 10P WHT-L :SMD
+17V 1
GND 2
D3.3V 3
D3.3V 4
GND 5
SUB5V 6
GND 7
+6.3V 8
+6.3V 9
GND 10
CN103 12P WHT 1.5MM PIT SMD
1 -6.3V
2 GND
3 POWER ON
4 FCON1
5 FCON2
6 FCON3
7 FPRO
8 PPRO
9 N.C
10 GND
11 FAN2
12 FPRO2
CN102 10P WHT 2MM PIT SMD
1 +17V
2 GND
3 D3.3
4 D3.3
5 GND
6 SUB5
7 GND
8 +6.3V
9 +6.3V
10 GND
C (2/2)
GB
CN104 3P 2MM PIT
VCC 1
0V 2
PFC ON 3
PFC
CN101 3P BLK :VH-B
VH 1
NC 2
0V 3
VH
CN301 3P WHT 2MM PIT
FAN1 1
GND 2
FPRO1 3
FAN1
CN302 6P WHT 1.5MM PIT SMD
FAN3 1
FPRO3 2
GND 3
FAN5 4
FPRO5 5
GND 6
FAN3
FAN5
CN303 3P WHT 1.5MM PIT SMD
FAN4 1
GND 2
FPRO4 3
FAN4
LCD PANEL
LCD PANEL
LCD PANEL
Frame (2/2)
B-SS1738-WW-KESSENZU-P2

 6-3

6-2. Schematic Diagrams and Printed Wiring Boards

Q BOARD

*:B SIDE

D100	E-2	IC100	* D-2
D102	E-3	IC101	* E-2
D103	E-3	IC102	* F-4
D104	E-3	IC103	* F-4
D105	D-1	IC104	* G-4
D106	D-1	IC200	* H-3
D120	J-4	IC301	* L-1
D121	G-1	IC302	* K-3
D122	H-2	IC303	* K-2
D123	E-2	IC304	* K-1
D125	* J-4	IC401	* M-4
D126	* G-1	IC402	L-4
D200	H-3	IC403	M-2
D202	J-3	IC404	* M-3
D203	H-3	IC405	* M-2
D204	H-3	IC406	M-3
D205	G-1	IC500	* G-3
D206	F-1	IC502	* E-3
D207	E-1	IC601	* G-2
D208	* G-2	IC602	* M-1
D209	* H-2	IC603	* J-2
D212	* H-4	IC701	* F-1
D215	* H-4	IC702	* F-1
D216	* J-3	IC703	* G-2
D303	L-1	IC710	A-1
D304	K-1	IC800	* C-4
D305	K-2	IC801	D-2
D306	K-1	IC900	B-2
D307	K-1	IC901	A-3
D401	J-3	IC902	B-3
D402	K-3		
D403	K-3	Q402	L-3
D404	* L-2	Q404	M-3
D405	M-3	Q430	* M-2
D406	M-3	Q500	G-3
D407	L-2	Q501	G-3
D408	J-3	Q502	G-2
D413	M-3	Q503	F-3
D500	G-3	Q504	F-3
D501	F-3	Q601	* L-1
D502	G-3	Q602	* M-1
D503	F-3	Q603	M-1
D504	F-3	Q604	* H-1
D505	F-3	Q605	* H-1
D506	F-3	Q606	* L-1
D507	F-3	Q901	B-2
D508	F-3	Q902	B-2
D509	E-3	Q903	B-2
D510	E-3	Q904	B-2
D511	E-3		
D530	G-2	TP103	E-4
D531	G-2	TP104	F-4
D532	G-2	TP105	G-4
D540	C-3	TP110	E-2
D601	* J-2	TP111	G-3
D602	* G-2	TP800	D-4
D603	* J-1		
D604	* K-3		
D605	* J-3		
D606	* G-2		
D607	J-2		
D608	* J-3		
D609	M-1		
D610	L-2		
D611	M-1		
D612	L-1		
D613	M-1		
D614	L-1		
D800	C-2		
D801	C-2		
D802	C-2		
D803	C-2		
D804	C-2		
D805	D-2		
D806	D-2		
D901	B-2		
D902	B-2		
D903	B-2		
D904	B-2		

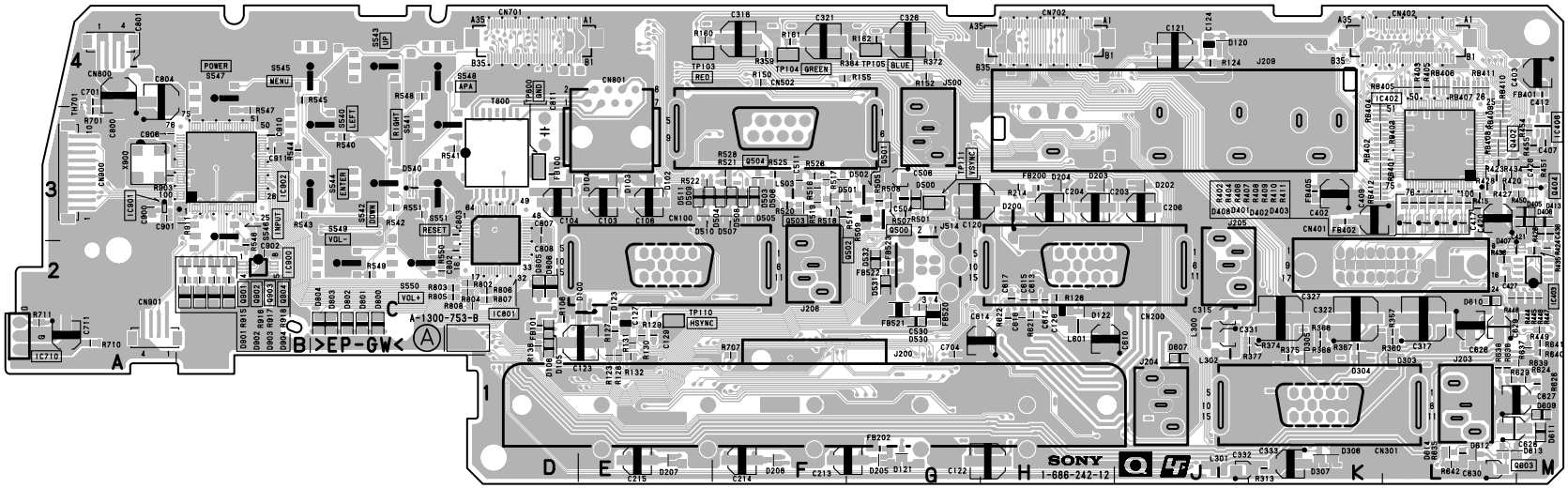

Q -A SIDE-
SUFFIX: -12

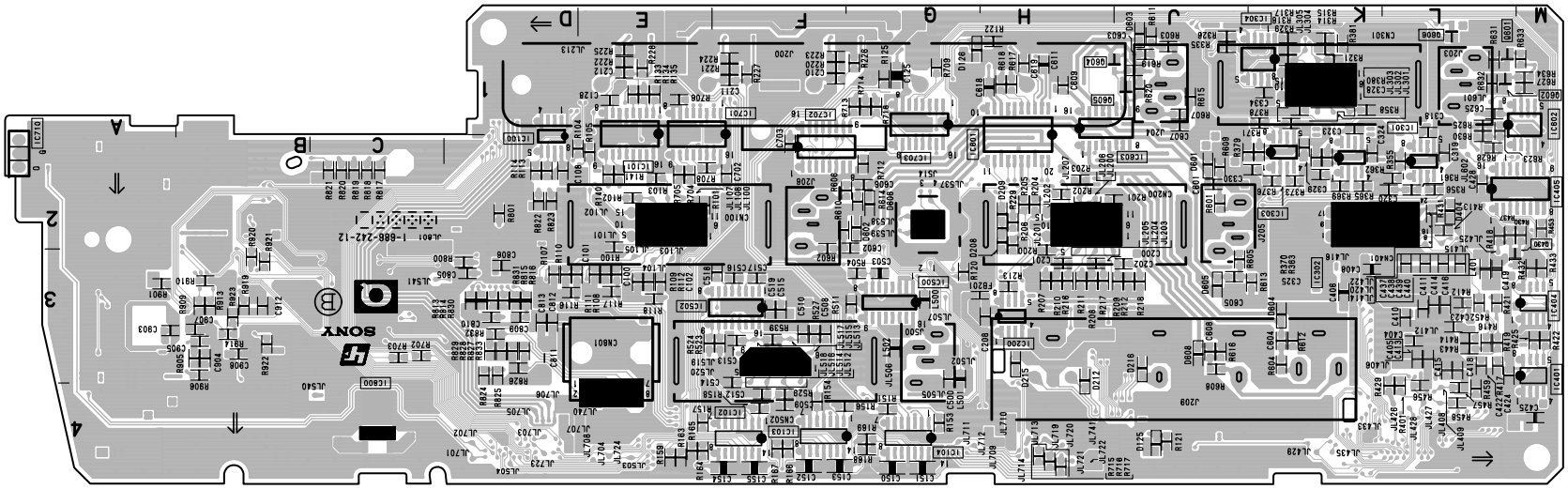

Q -B SIDE-
SUFFIX: -12

Q BOARD

*:B SIDE

D100	E-2	IC100	* D-2
D102	E-3	IC101	* E-2
D103	E-3	IC102	* F-4
D104	E-3	IC103	* F-4
D105	D-2	IC104	* G-4
D106	D-2	IC200	* H-3
D120	J-4	IC301	* K-1
D121	G-1	IC302	* K-3
D122	H-2	IC303	* K-2
D123	E-2	IC304	* K-1
D125	* J-4	IC401	* M-3
D126	* J-3	IC402	L-3
D200	H-3	IC403	M-2
D202	J-3	IC404	* M-3
D203	H-3	IC405	* M-2
D204	H-3	IC406	M-3
D205	G-1	IC500	* G-3
D206	F-1	IC502	* F-3
D207	E-1	IC601	* H-2
D208	* H-2	IC602	* M-1
D209	* H-2	IC603	* J-2
D212	* H-3	IC701	* F-2
D215	* H-3	IC702	* F-2
D216	* G-1	IC703	* G-2
D303	L-1	IC710	A-2
D304	K-1	IC800	* C-4
D305	K-2	IC801	D-2
D306	K-1	IC900	B-2
D307	K-1	IC901	A-3
D401	L-3	IC902	B-3
D402	L-3		
D403	L-3	Q402	M-3
D404	* L-2	Q404	M-3
D405	M-3	Q430	* M-2
D406	M-3	Q500	G-3
D407	L-2	Q501	G-3
D408	L-3	Q502	F-3
D413	M-3	Q503	F-3
D500	G-3	Q504	F-3
D501	F-3	Q601	* L-1
D502	G-3	Q602	* L-1
D503	F-3	Q603	M-1
D504	F-3	Q604	* H-1
D505	F-3	Q605	* J-1
D506	F-3	Q606	* L-1
D507	F-3	Q901	B-2
D508	F-3	Q902	B-2
D509	E-3	Q903	B-2
D510	E-3	Q904	B-2
D511	E-3		
D530	G-2	TP103	E-4
D531	G-2	TP104	F-4
D532	G-2	TP105	G-4
D540	C-3	TP110	E-2
D601	* J-2	TP111	G-3
D602	* G-2	TP800	D-4
D603	* J-1		
D604	* K-3		
D605	* J-3		
D606	* G-2		
D607	J-1		
D608	* J-3		
D609	M-1		
D610	L-2		
D611	M-1		
D612	L-1		
D613	M-1		
D614	L-1		
D800	C-2		
D801	C-2		
D802	C-2		
D803	C-2		
D804	C-2		
D805	D-2		
D806	D-2		
D901	B-2		
D902	B-2		
D903	B-2		
D904	B-2		

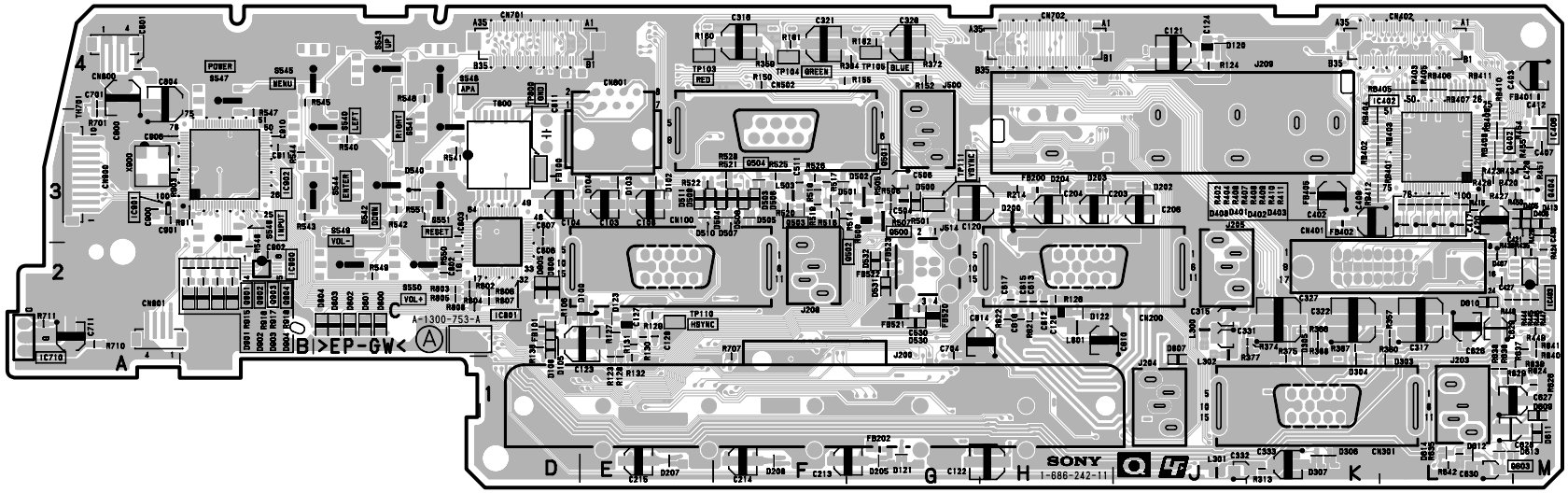

Q -A SIDE-
SUFFIX: -11

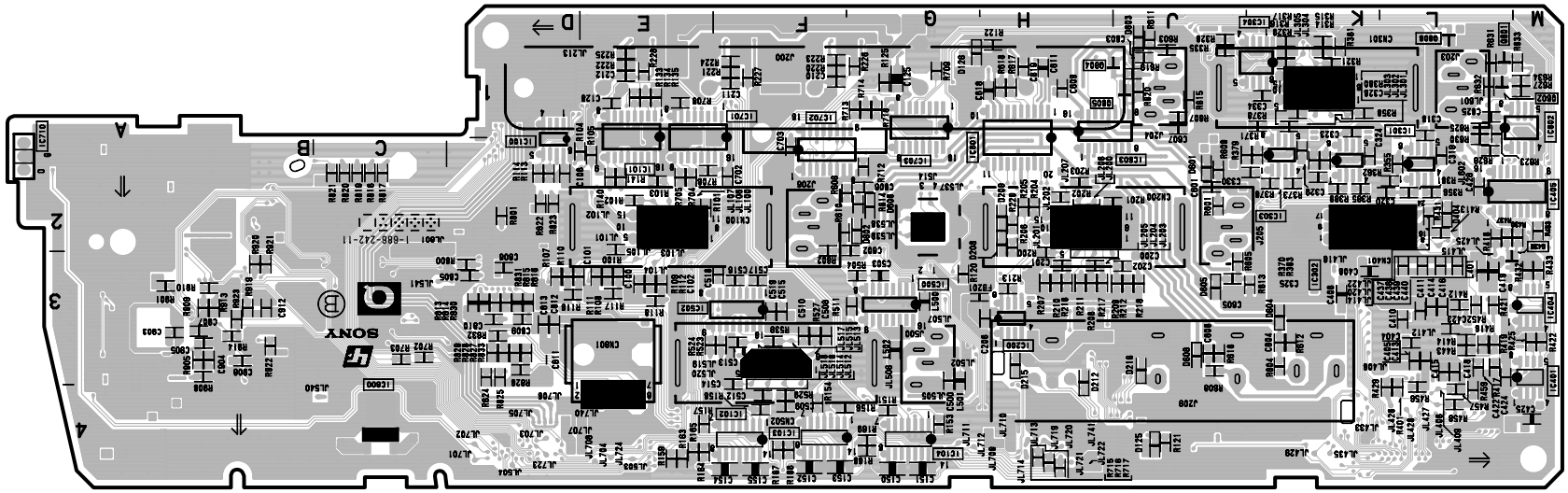

Q -B SIDE-
SUFFIX: -11

Q (1/9, 2/9) 24LC21AT/SN (IC100, IC200)

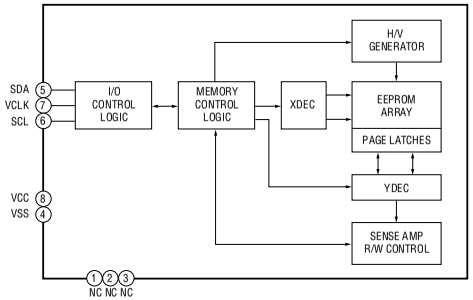

Q (6/9) BU4052BCF-E2 (IC603)

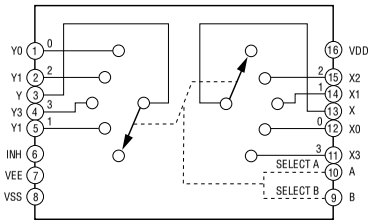

Q (1/9) HA4314BCB (IC102, IC103, IC104)

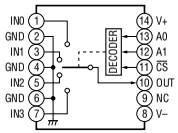

Q (6/9) LM358PS (IC602)

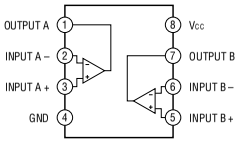

Q (5/9) MAX202CSE (IC502)

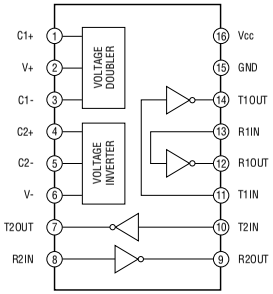

Q (5/9) PC74HC123D (IC500)

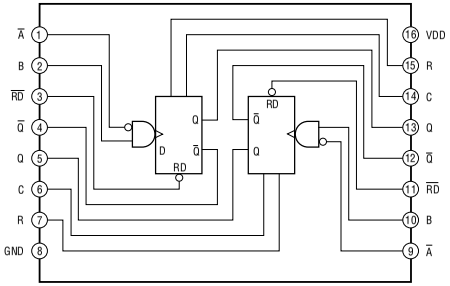

Q (3/9) SN75453BPS (IC304)

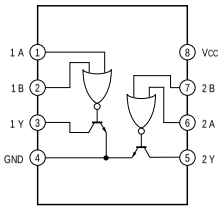

Q (1/9, 7/9) TC74HC4052AF (IC101, IC701)

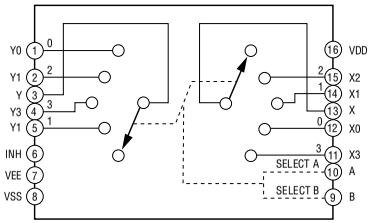

Q (7/9) TC74HC4053AF (IC702, IC703)

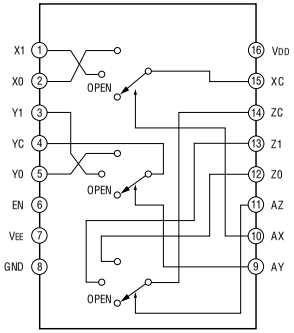

Q (6/9) TDA7309D013TR (IC601)

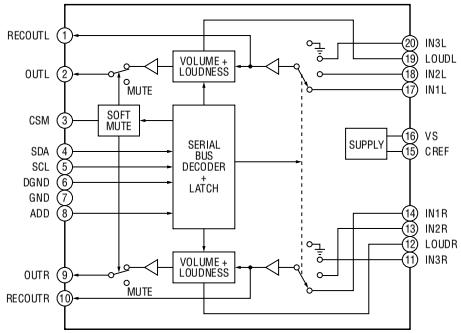

Q (1/9)

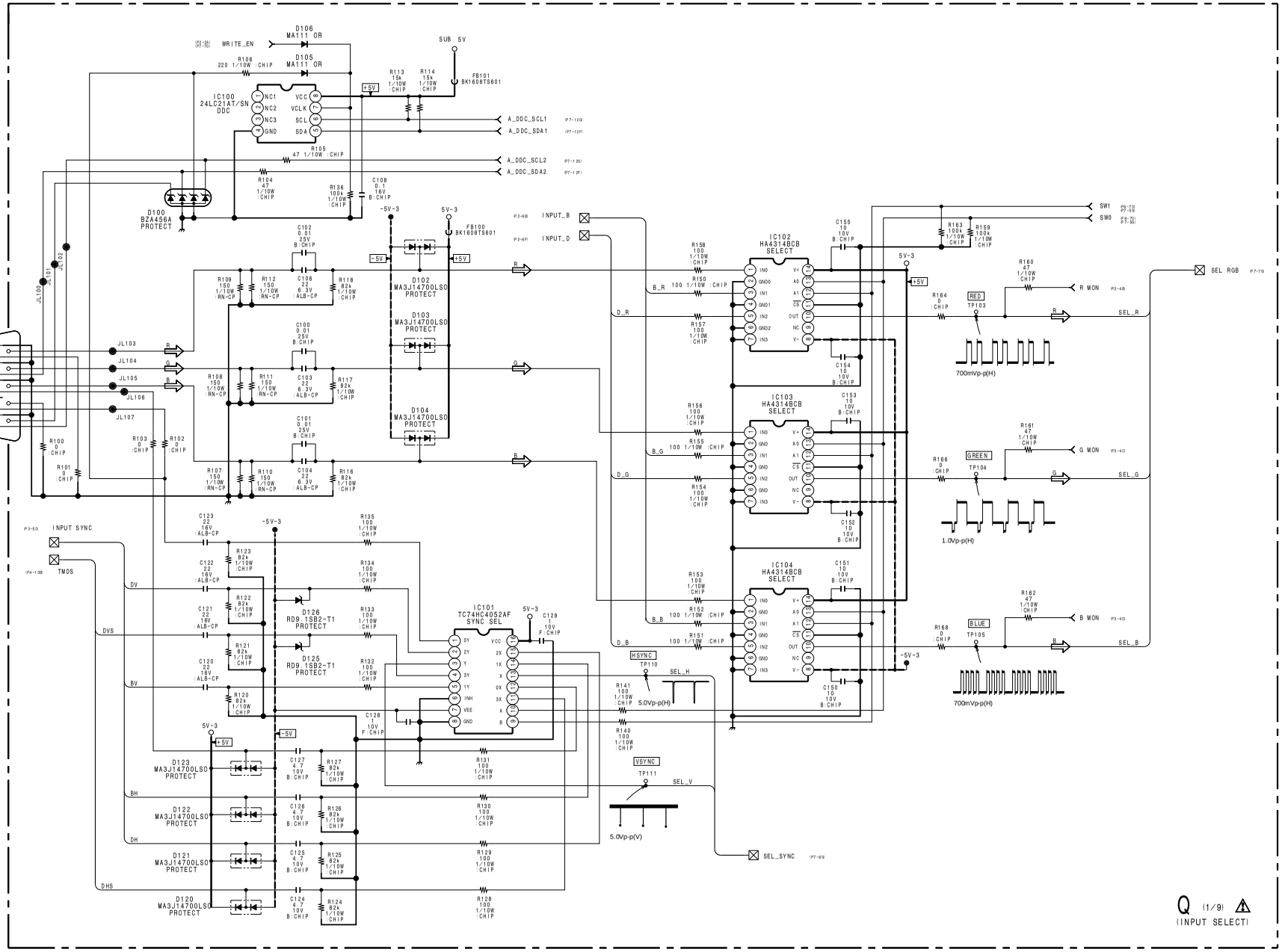

B-SS1738-WW-Q-P1

6-6

Q (2/9)

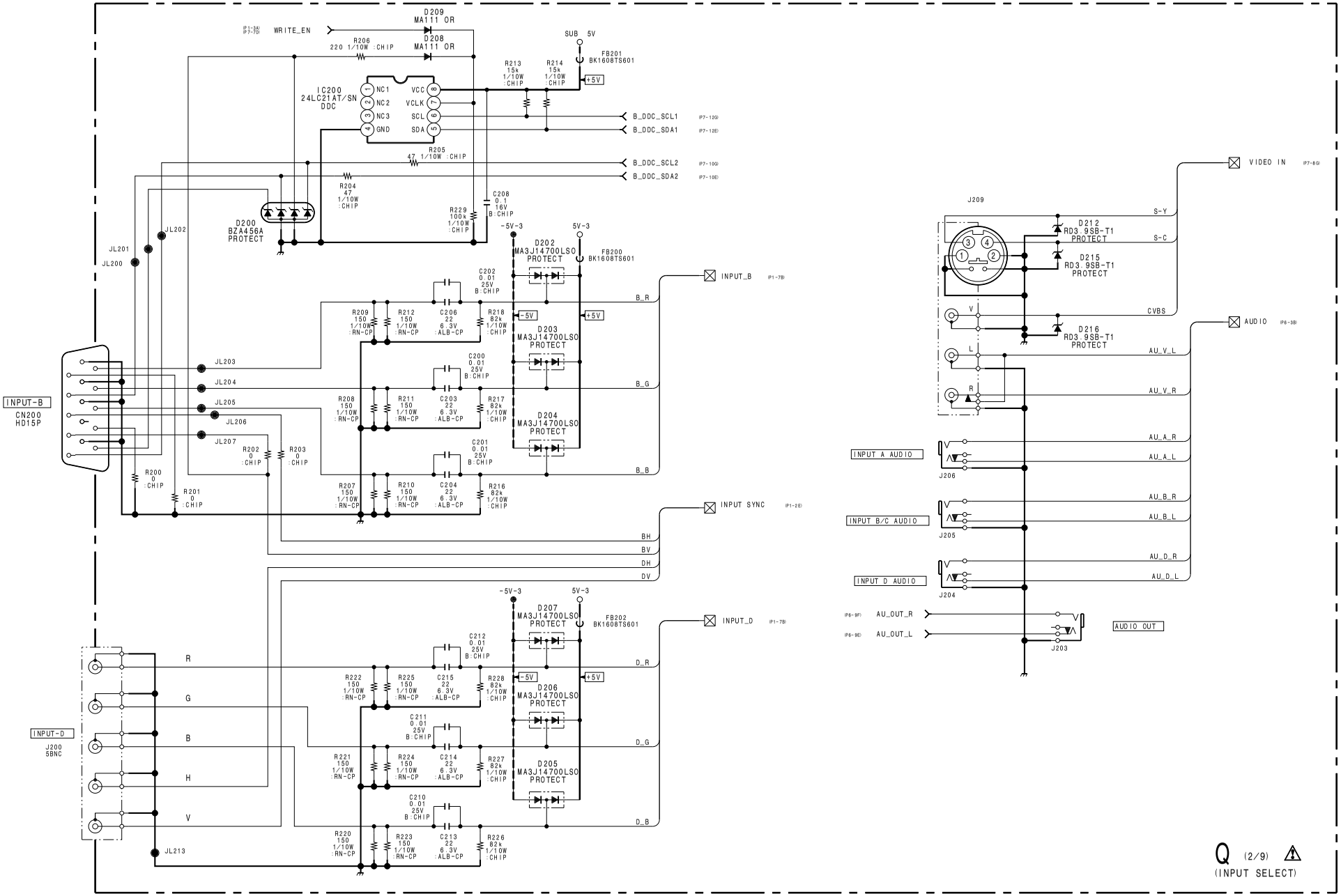

B-SS1738-WW-Q-P2

A B C D E F G H

Q (3/9)

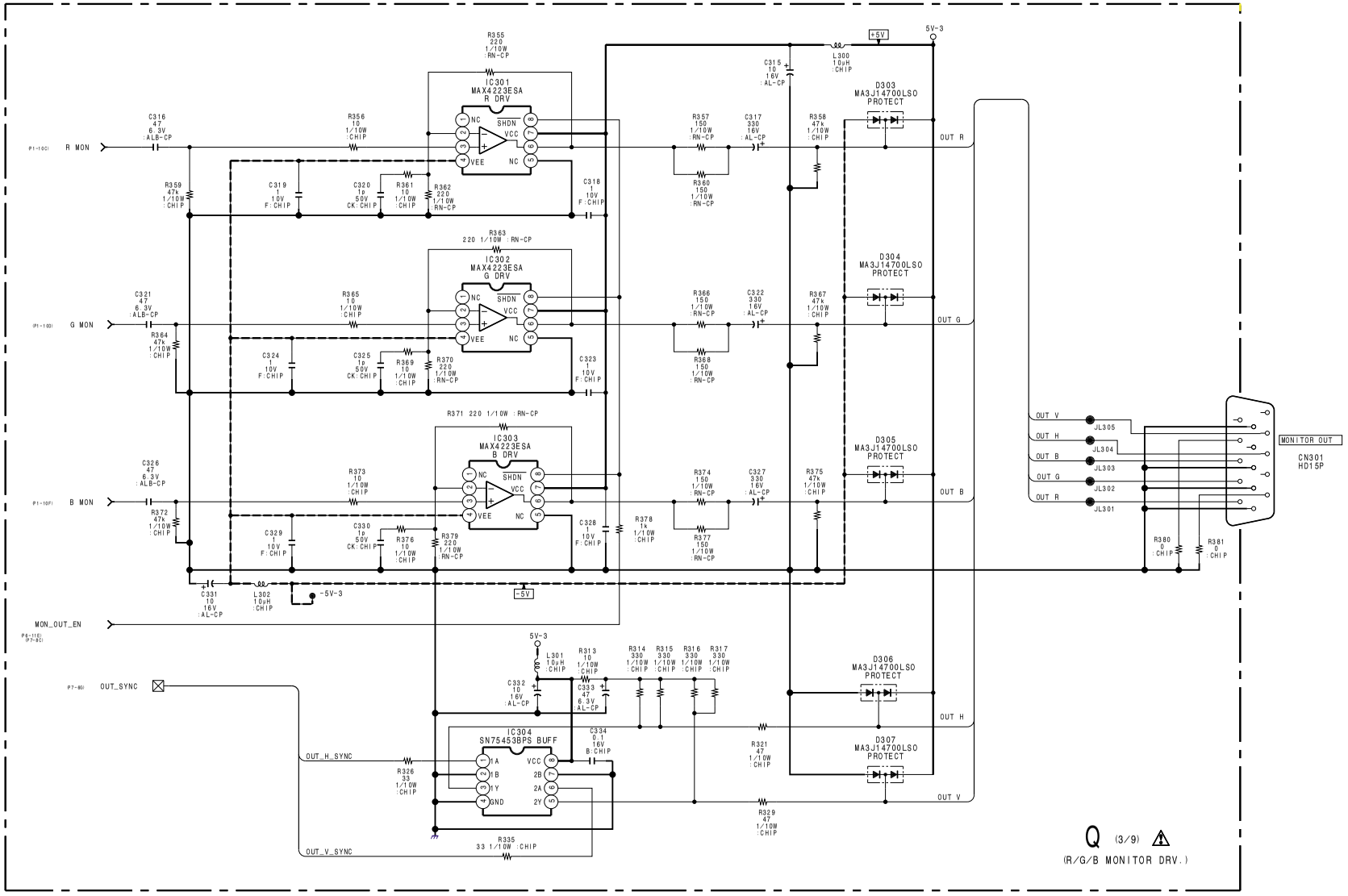

B-SS1738-WW-Q-P3

6-8

Q (4/9)

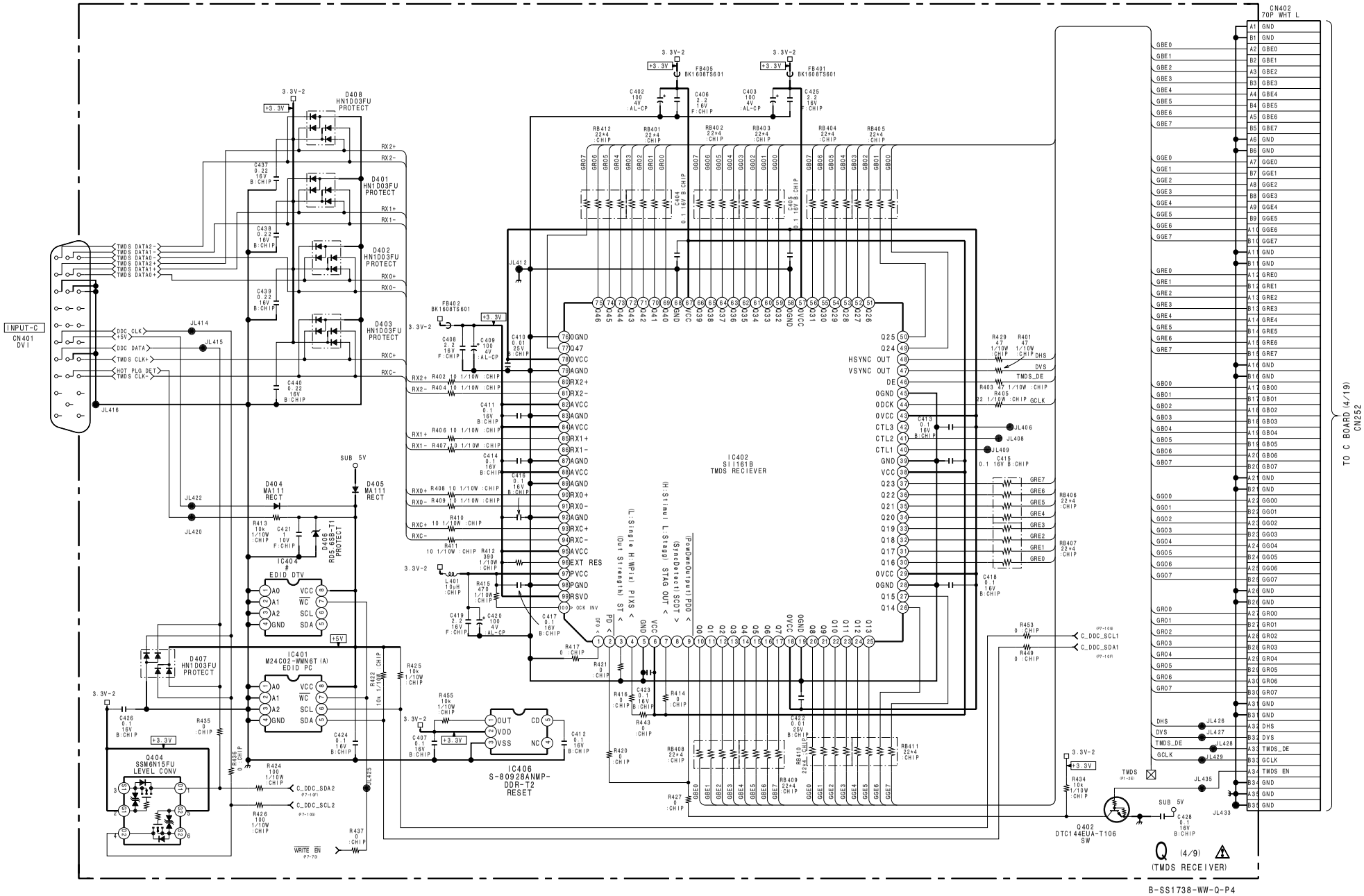
INPUT-C
CN401
DVI
IC402
SI1618
TMDS RECIEVER
IC404
EDID DTV
IC401
M24C02-WMN6T (A)
EDID PC
IC406
S-80928ANMP-
DDR-T2
RESET
Q404
SSM6N15FU
LEVEL CONV
Q402
DTC144EUA-T106
SW
CN402
70P WHT L
TO C BOARD (4/19)
CN252
Q (4/9)
(TMDS RECEIVER)
B-SS1738-WW-Q-P4

Q (5/9)

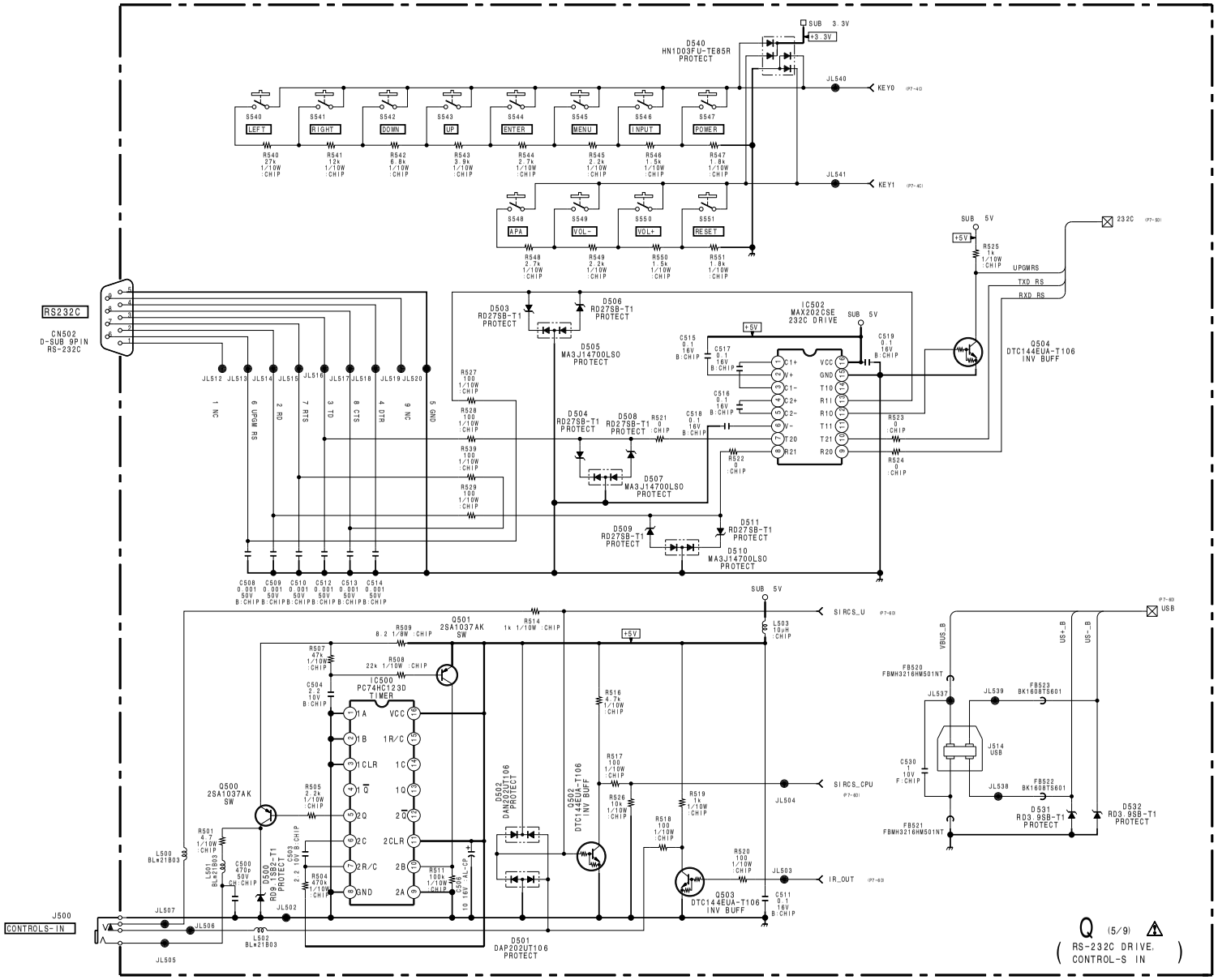
D540
HN1D03FU-TE85R
PROTECT
SUB 3.3V
+3.3V
JL540
KEY0
JL541
KEY1
S540 LEFT
S541 RIGHT
S542 DOWN
S543 UP
S544 ENTER
S545 MENU
S546 INPUT
S547 POWER
S548 APA.
S549 VOL-
S550 VOL+
S551 RESET
R540 27k 1/10W :CHIP
R541 12k 1/10W :CHIP
R542 6.8k 1/10W :CHIP
R543 3.9k 1/10W :CHIP
R544 2.7k 1/10W :CHIP
R545 2.2k 1/10W :CHIP
R546 1.5k 1/10W :CHIP
R547 1.8k 1/10W :CHIP
R548 2.7k 1/10W :CHIP
R549 2.2k 1/10W :CHIP
R550 1.5k 1/10W :CHIP
R551 1.8k 1/10W :CHIP
RS232C
CN502
D-SUB 9PIN
RS-232C
JL512 JL513 JL514 JL515 JL516 JL517 JL518 JL519 JL520
1 NC
6 UPGM RS
2 RD
7 RTS
3 TD
8 CTS
4 DTR
9 NC
5 GND
D503 RD27SB-T1 PROTECT
D506 RD27SB-T1 PROTECT
D505 MA3J14700LSO PROTECT
D504 RD27SB-T1 PROTECT
D508 RD27SB-T1 PROTECT
D507 MA3J14700LSO PROTECT
D509 RD27SB-T1 PROTECT
D511 RD27SB-T1 PROTECT
D510 MA3J14700LSO PROTECT
IC502
MAX202CSE
232C DRIVE
SUB 5V
+5V
C1+ V+ C1- C2+ C2- V- T20 R21
VCC GND T10 R11 R10 T11 T21 R20
C515 0.1 16V B:CHIP
C517 0.1 16V B:CHIP
C516 0.1 16V B:CHIP
C518 0.1 16V B:CHIP
C519 0.1 16V B:CHIP
R527 100 1/10W :CHIP
R528 100 1/10W :CHIP
R539 100 1/10W :CHIP
R529 100 1/10W :CHIP
R521 0 :CHIP
R522 0 :CHIP
R523 0 :CHIP
R524 0 :CHIP
R525 1k 1/10W :CHIP
232C
UPGMRS
TXD RS
RXD RS
Q504
DTC144EUA-T106
INV BUFF
C508 0.001 50V B:CHIP
C509 0.001 50V B:CHIP
C510 0.001 50V B:CHIP
C512 0.001 50V B:CHIP
C513 0.001 50V B:CHIP
C514 0.001 50V B:CHIP
SIRCS_U
L503 10uH :CHIP
R514 1k 1/10W :CHIP
R509 8.2 1/8W :CHIP
Q501
2SA1037AK
SW
R508 22k 1/10W :CHIP
R507 47k 1/10W :CHIP
C504 2.2 10V B:CHIP
IC500
PC74HC123D
TIMER
1A 1B 1CLR 1Q̄ 2Q 2C 2R/C GND
VCC 1R/C 1C 1Q 2Q̄ 2CLR 2B 2A
Q500
2SA1037AK
SW
R505 2.2k 1/10W :CHIP
R501 4.7 1/10W :CHIP
L500 BLM21B03
L501 BLM21B03
C500 470p 50V CH:CHIP
D500 RD9.1SB2-T1 PROTECT
C503 2.2 10V B:CHIP
R504 470k 1/10W :CHIP
R511 100k 1/10W :CHIP
C505 10 16V AL-CP
D502 DAP202UT106 PROTECT
D501 DAP202UT106 PROTECT
Q502 DTC144EUA-T106 INV BUFF
R516 4.7k 1/10W :CHIP
R517 100 1/10W :CHIP
R526 10k 1/10W :CHIP
R518 100 1/10W :CHIP
R519 1k 1/10W :CHIP
SIRCS_CPU
JL504
R520 100 1/10W :CHIP
Q503
DTC144EUA-T106
INV BUFF
JL503
IR_OUT
C511 0.1 16V B:CHIP
J500
CONTROLS-IN
JL507
JL506
JL505
JL502
L502 BLM21B03
USB
VBUS_B
US-_B
US-_B
FB520 FBMH3216HM501NT
FB521 FBMH3216HM501NT
JL537
JL539
FB523 BK1608TS601
J514 USB
C530 1 10V F:CHIP
JL538
FB522 BK1608TS601
D531 RD3.9SB-T1 PROTECT
D532 RD3.9SB-T1 PROTECT
Q (5/9)
RS-232C DRIVE, CONTROL-S IN
B-SS1738-WW-Q-P5

6-10

Q (6/9)

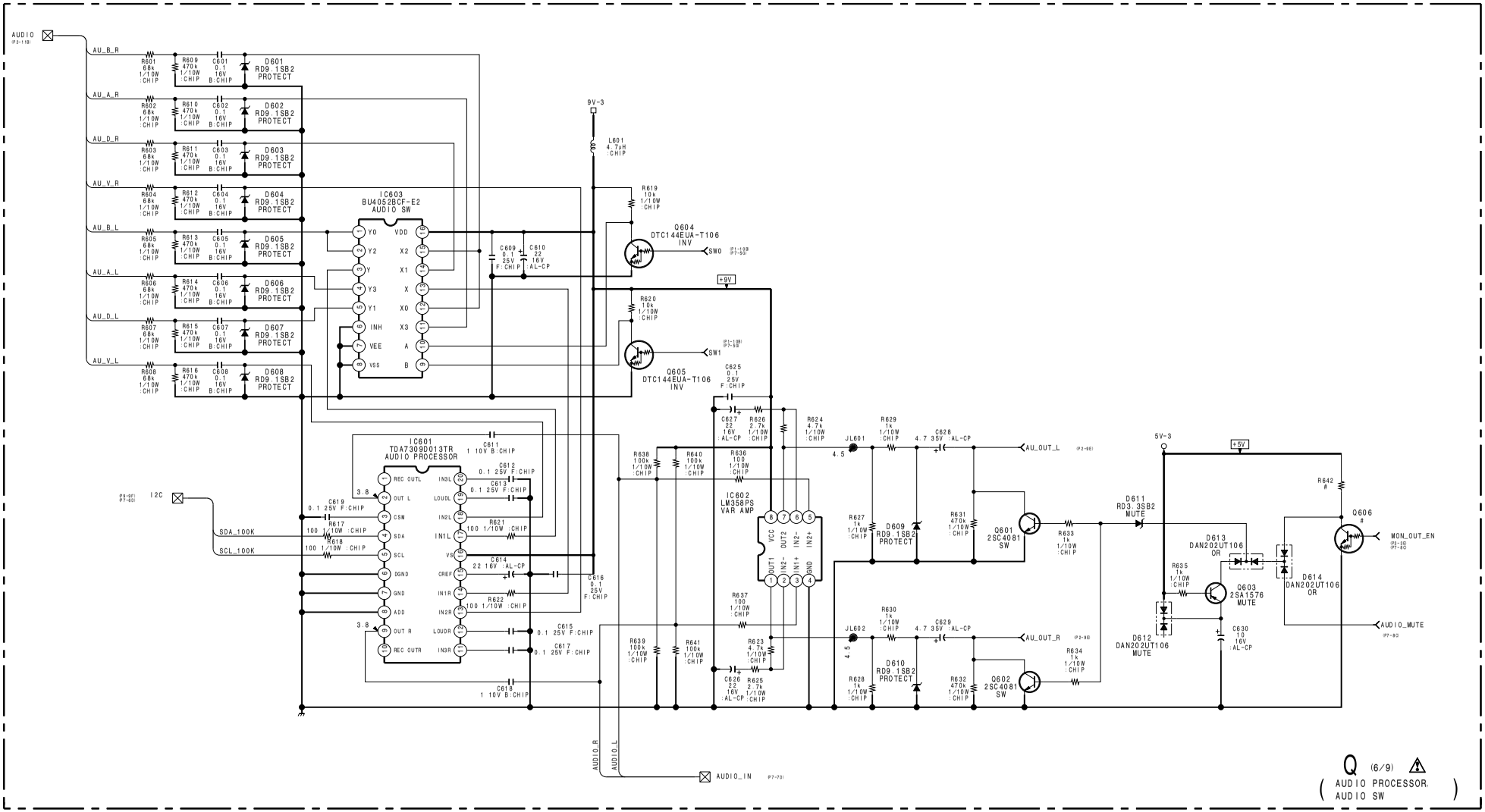

B-SS1738-WW-Q-P6

6-11

Q (7/9)

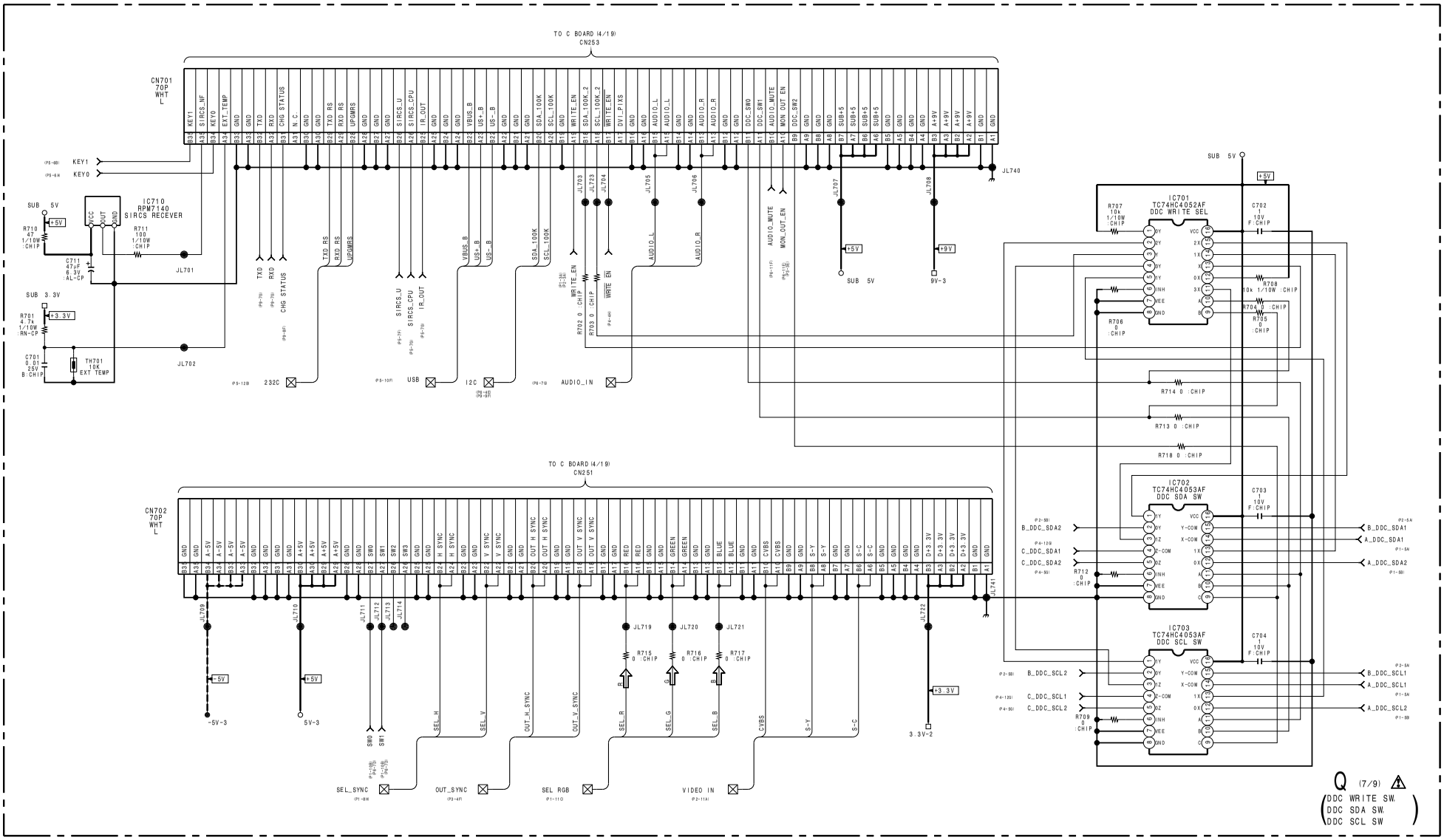

B-SS1738-WW-Q-P7

6-12

 Q (8/9)

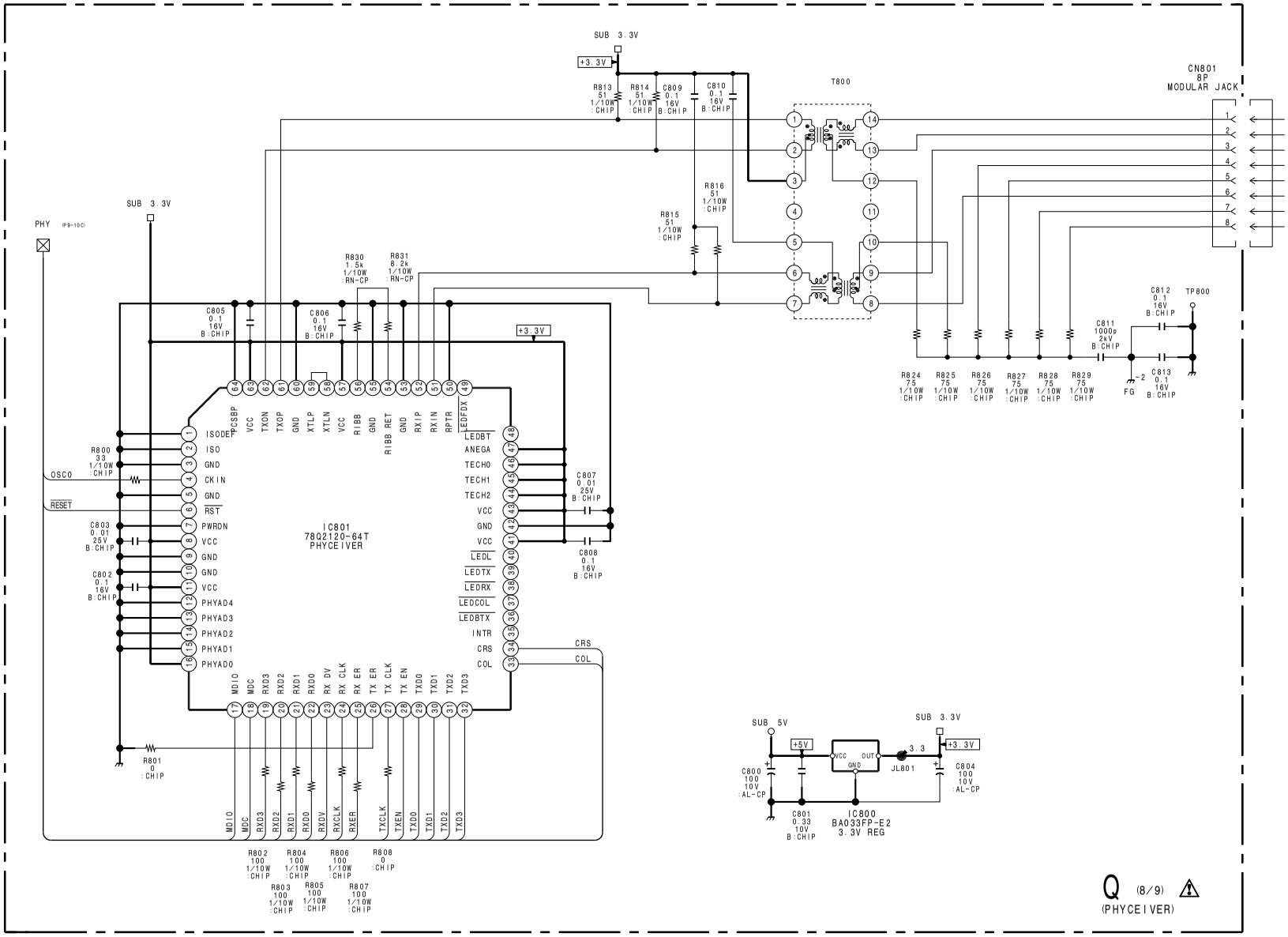

B-SS1738-WW-Q-P8

 6-13

A B C D E F G H

Q (9/9)

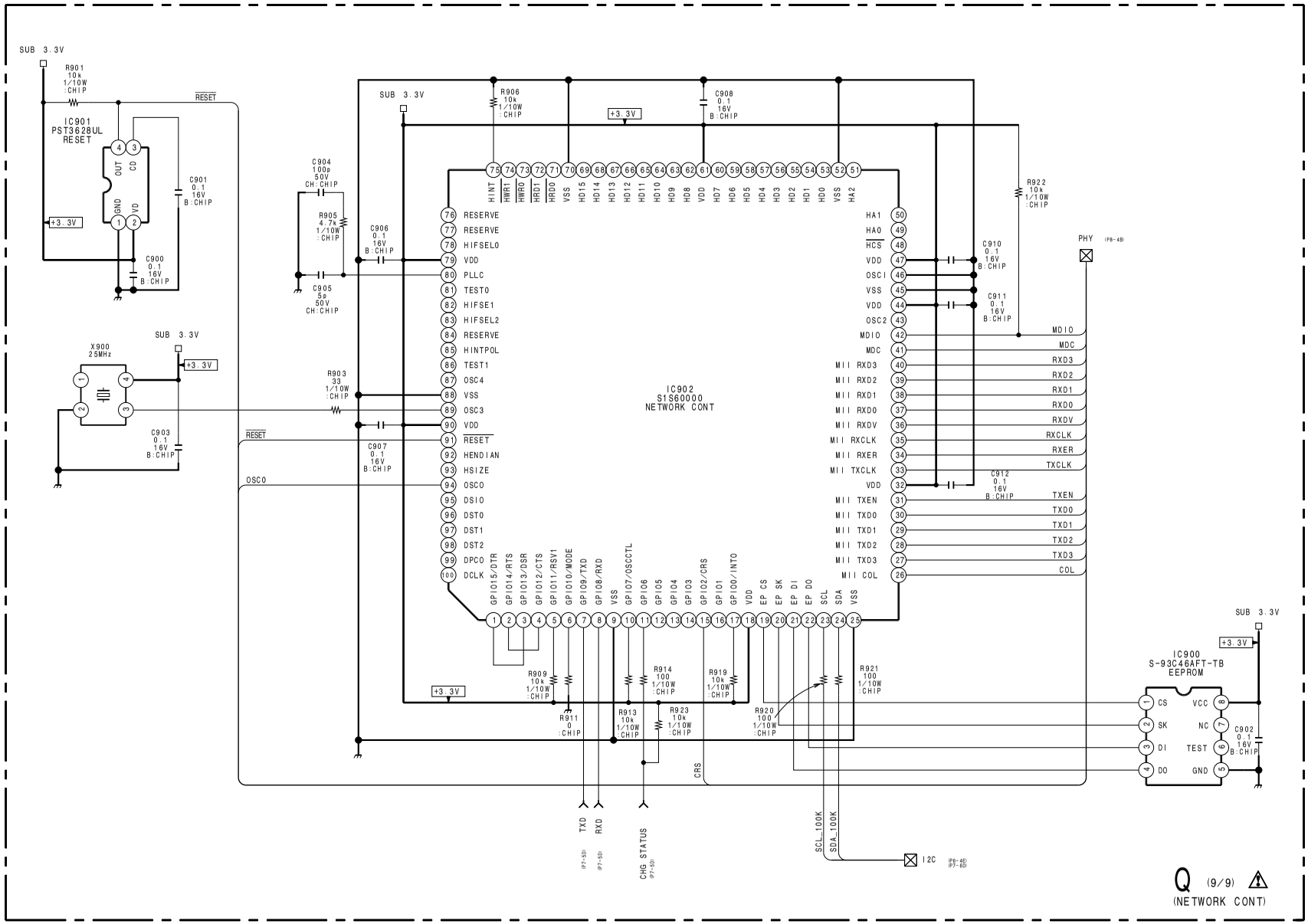

B-SS1738-WW-Q-P9

6-14

C (12/19) 74VHC00MTCX (IC653)

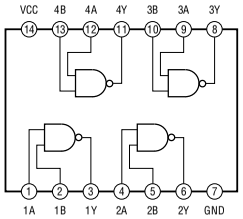

C (7/19, 17/19, 19//19) 74VHC221AMTCX (IC406, IC902, IC981)

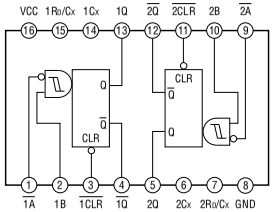

C (8/19) AD9888XS-170 (IC451)

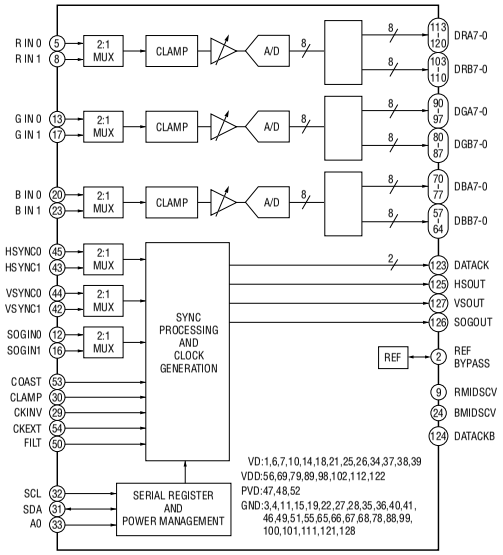

C (14/19, 15/19, 16/19) CXA7000R-T6 (IC751, IC801, IC851)

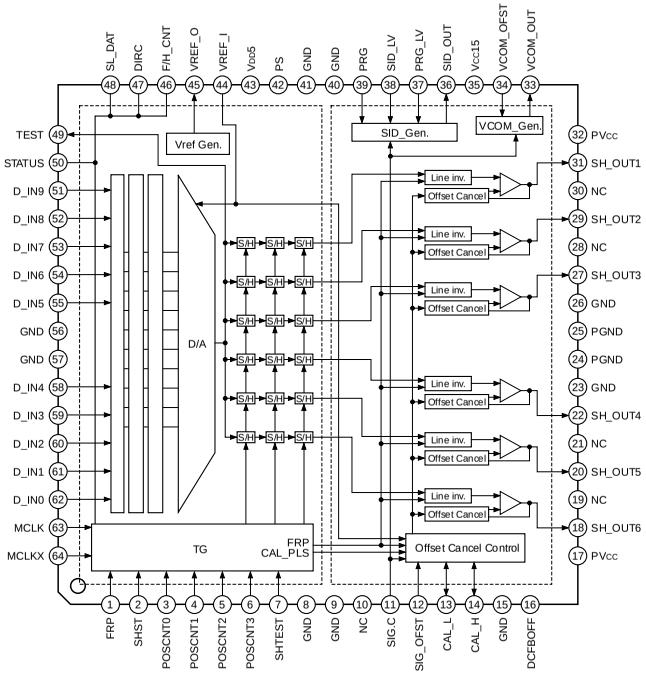

C (7/19) GS1881-CTA (IC401)

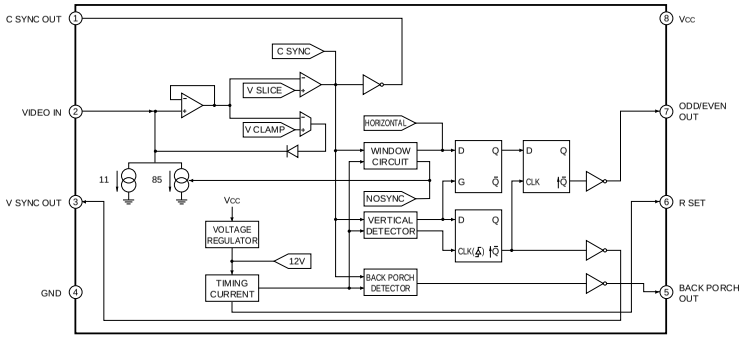

C (12/19) ICS332-SX1738 (IC659)

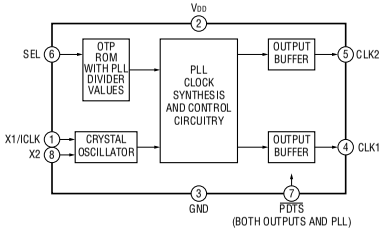

C (7/19) M52347FP-TE (IC405)

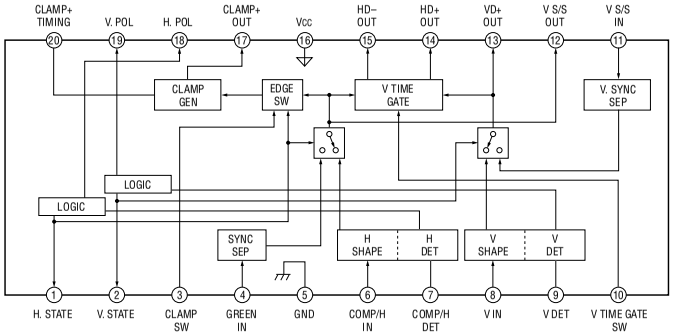

C (12/19, 19/19) SN74LV125APWR (IC656, IC657, IC985, IC988)

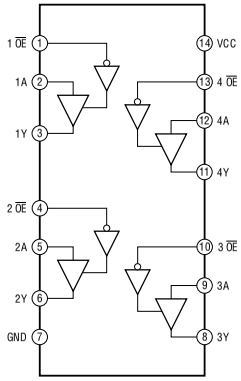

C (13/19) M62392FP (IC708)

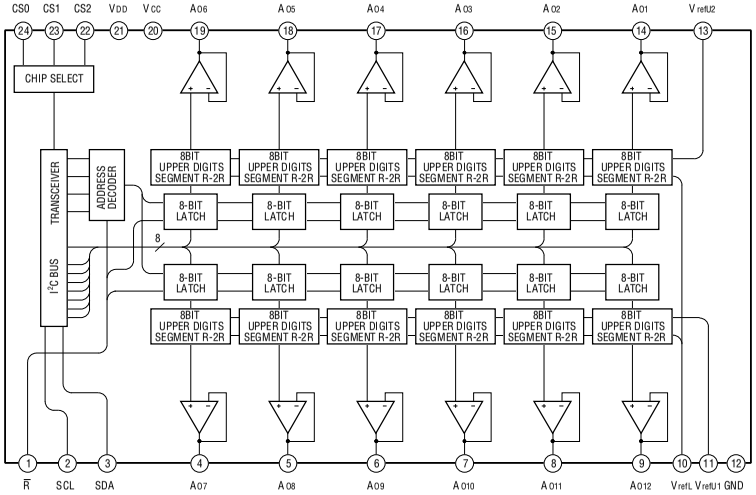

C (9/19) SN74LV541APWR
(IC501,, IC502, IC503, IC504, IC505, IC506,, IC507)
C (13/19) SN74HCT541PWR
(IC709, IC710, IC712)

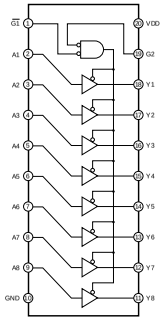

C (7/19) SN75157PS-ELL (IC404)

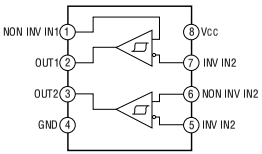

C (13/19) TC74VHCT04AFT(EL) (IC711)

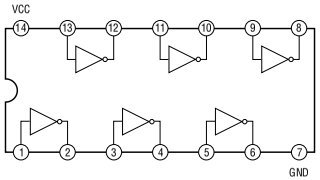

C (13/19) TC74VHCT540AFT(EL) (IC713)

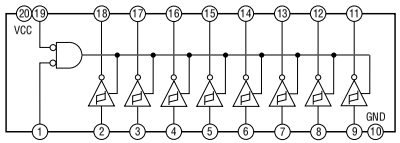

C (12/19) TC7W126FU(TE12R) (IC652)

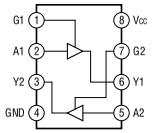

C (7/19) TC7W53FK(TE85R) (IC403)

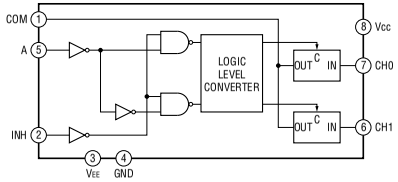

C (19/19) TC7WH04FK(TE85R) (IC983)

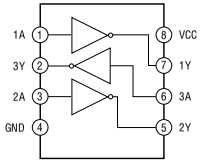

C (13/19) TC7WH125FK (IC701)

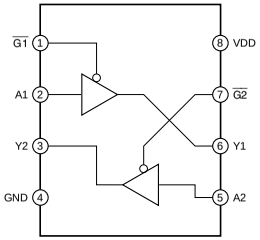

C (19/19) TC7WH14FK(TE85R) (IC987)

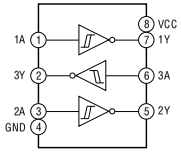

C (19/19) TC7WH32FK(TE85R) (IC986)

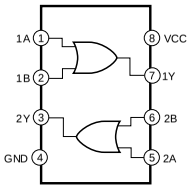

C (19/19) TC7WH74FK(TE85R) (IC984)
C (6/19) TC7WH74FU (IC353)

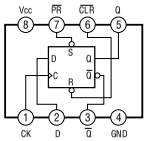

C (17/19) TPA2000D2PWPR (IC901)

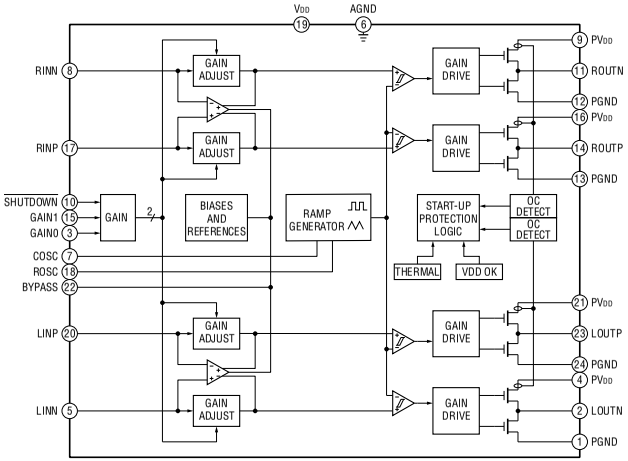

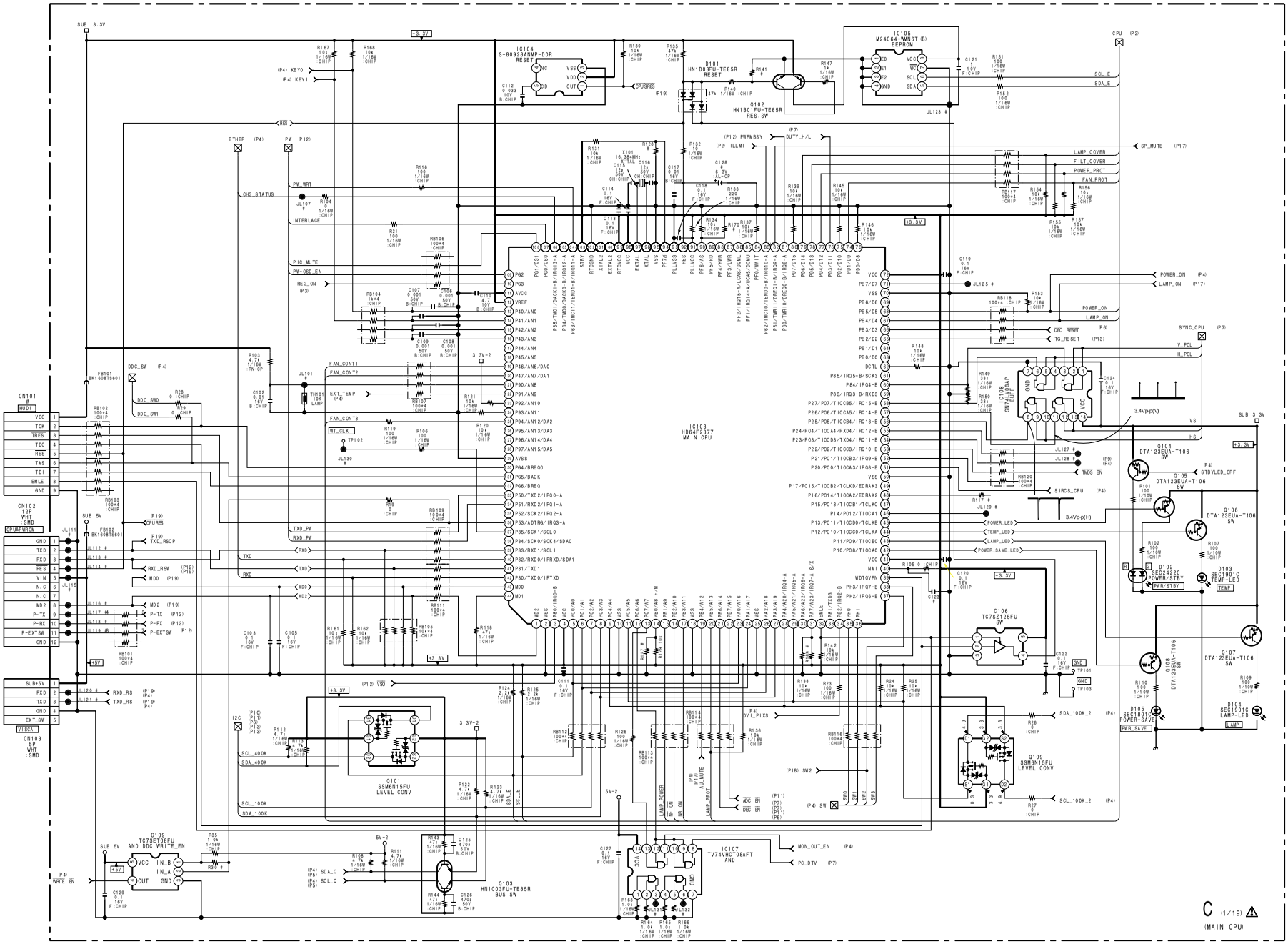
IC103
HD64F2377
MAIN CPU
IC104
S-8092BANMP-DDR
RESET
IC105
M24C64-WMN6T (B)
EEPROM
Q101
SSM6N15FU
LEVEL CONV
Q102
HN1B01FU-TE85R
RES SW
Q103
HN1C03FU-TE85R
BUS SW
Q104
DTA123EUA-T106
SW
Q105
DTA123EUA-T106
SW
Q106
DTA123EUA-T106
SW
Q107
DTA123EUA-T106
SW
Q108
DTA123EUA-T106
SW
Q109
SSM6N15FU
LEVEL CONV
IC106
TC7SZ125FU
SW
IC107
TV74VHCT08AFT
AND
IC108
SW BLOCK
IC109
TC7SET08FU
AND DDC WRITE_EN
CN101
HUD1
CN102
12P
WHT
SMD
CN103
5P
WHT
SMD
D101
HN1D03FU-TE85R
RESET
D102
SEC2422C
POWER/STBY
D103
SEC1901C
TEMP-LED
D104
SEC1901C
LAMP-LED
D105
SEC1801C
POWER-SAVE
C (1/19)
(MAIN CPU)

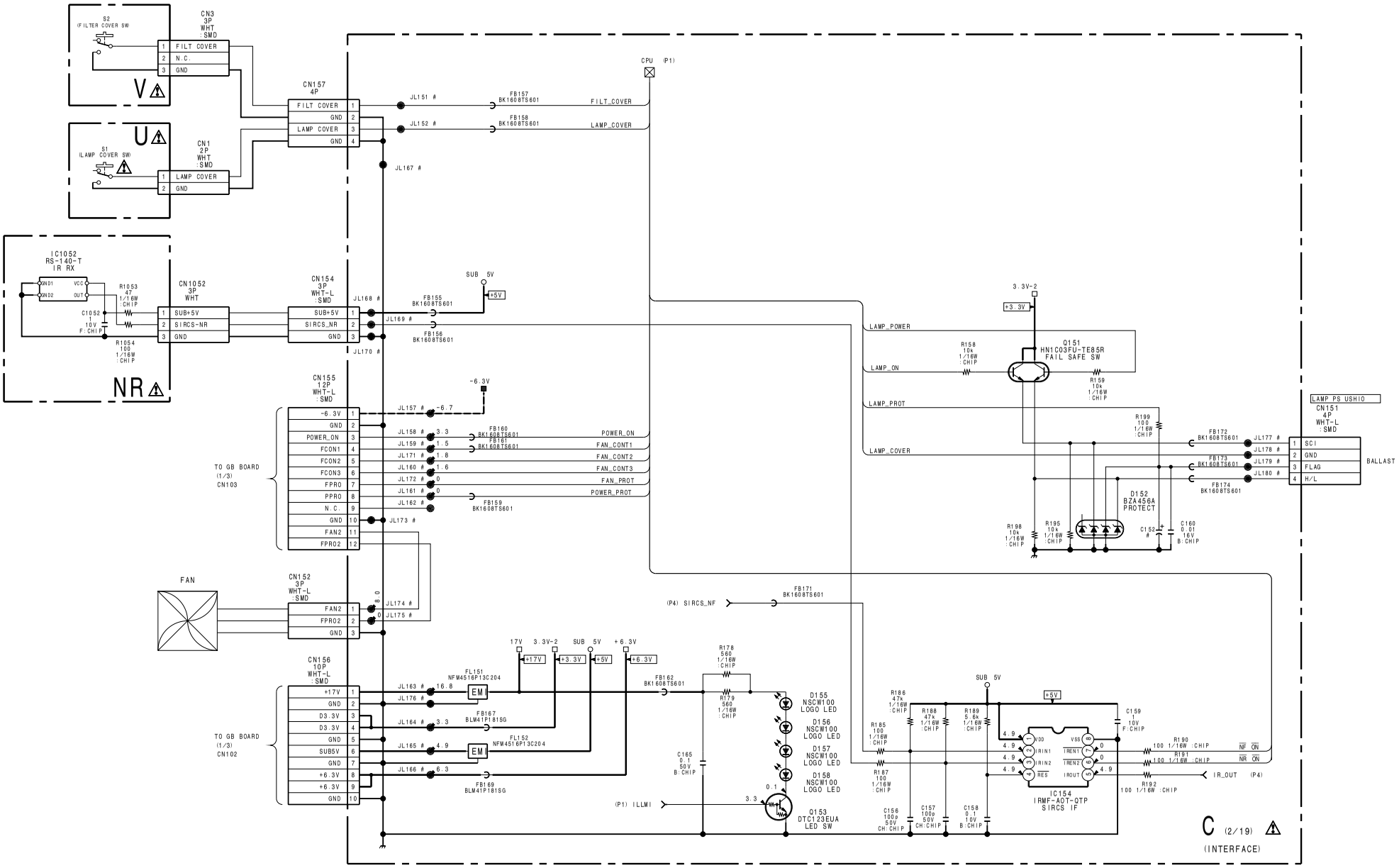
S2 (FILTER COVER SW)
CN3 3P WHT :SMD
FILT COVER
N.C.
GND
V
U
S1 (LAMP COVER SW)
CN1 2P WHT :SMD
LAMP COVER
CN157 4P
FILT COVER
LAMP COVER
GND
JL151 #
JL152 #
JL167 #
FB157 BK1608TS601
FB158 BK1608TS601
FILT_COVER
LAMP_COVER
CPU (P1)
IC1052 RS-140-T IR RX
GND1
GND2
VCC
OUT
R1053 47 1/16W :CHIP
C1052 1 10V F:CHIP
R1054 100 1/16W :CHIP
CN1052 3P WHT
SUB+5V
SIRCS-NR
CN154 3P WHT-L :SMD
SIRCS_NR
JL168 #
JL169 #
JL170 #
FB155 BK1608TS601
FB156 BK1608TS601
SUB 5V
+5V
NR
CN155 12P WHT-L :SMD
-6.3V
JL157 #
JL158 #
JL159 #
JL171 #
JL160 #
JL172 #
JL161 #
JL162 #
JL173 #
FB160 BK1608TS601
FB161 BK1608TS601
FB159 BK1608TS601
POWER_ON
FAN_CONT1
FAN_CONT2
FAN_CONT3
FAN_PROT
POWER_PROT
TO GB BOARD (1/3) CN103
FCON1
FCON2
FCON3
FPRO
PPRO
FAN2
FPRO2
FAN
CN152 3P WHT-L :SMD
JL174 #
JL175 #
CN156 10P WHT-L :SMD
+17V
D3.3V
SUB5V
+6.3V
TO GB BOARD (1/3) CN102
JL163 #
JL176 #
JL164 #
JL165 #
JL166 #
FL151 NFM4516P13C204
FL152 NFM4516P13C204
FB167 BLM41P181SG
FB169 BLM41P181SG
FB162 BK1608TS601
R178 560 1/16W :CHIP
R179 560 1/16W :CHIP
C165 0.1 50V B:CHIP
(P1) ILLMI
D155 NSCW100 LOGO LED
D156 NSCW100 LOGO LED
D157 NSCW100 LOGO LED
D158 NSCW100 LOGO LED
D153 DTC123EUA LED SW
(P4) SIRCS_NF
FB171 BK1608TS601
3.3V-2
LAMP_POWER
LAMP_ON
LAMP_PROT
LAMP_COVER
R158 10k 1/16W :CHIP
Q151 HN1C03FU-TE85R FAIL SAFE SW
R159 10k 1/16W :CHIP
R199 100 1/16W :CHIP
FB172 BK1608TS601
FB173 BK1608TS601
FB174 BK1608TS601
JL177 #
JL178 #
JL179 #
JL180 #
LAMP_PS_USHIO
CN151 4P WHT-L :SMD
SCI
GND
FLAG
H/L
BALLAST
D152 BZA456A PROTECT
R198 10k 1/16W :CHIP
R195 10k 1/16W :CHIP
C152 #
C160 0.01 16V B:CHIP
R186 47k 1/16W :CHIP
R188 47k 1/16W :CHIP
R189 5.6k 1/16W :CHIP
R185 100 1/16W :CHIP
R187 100 1/16W :CHIP
C156 100p 50V CH:CHIP
C157 100p 50V CH:CHIP
C158 0.1 10V B:CHIP
C159 1 10V F:CHIP
IC154 IRMF-AOT-QTP SIRCS IF
VDD
VSS
IRIN1
IRIN2
RES
IRENT
IRENT2
IROUT
R190 100 1/16W :CHIP
R191 100 1/16W :CHIP
R192 100 1/16W :CHIP
IR_OUT (P4)
C (2/19)
(INTERFACE)

 C (3/19)

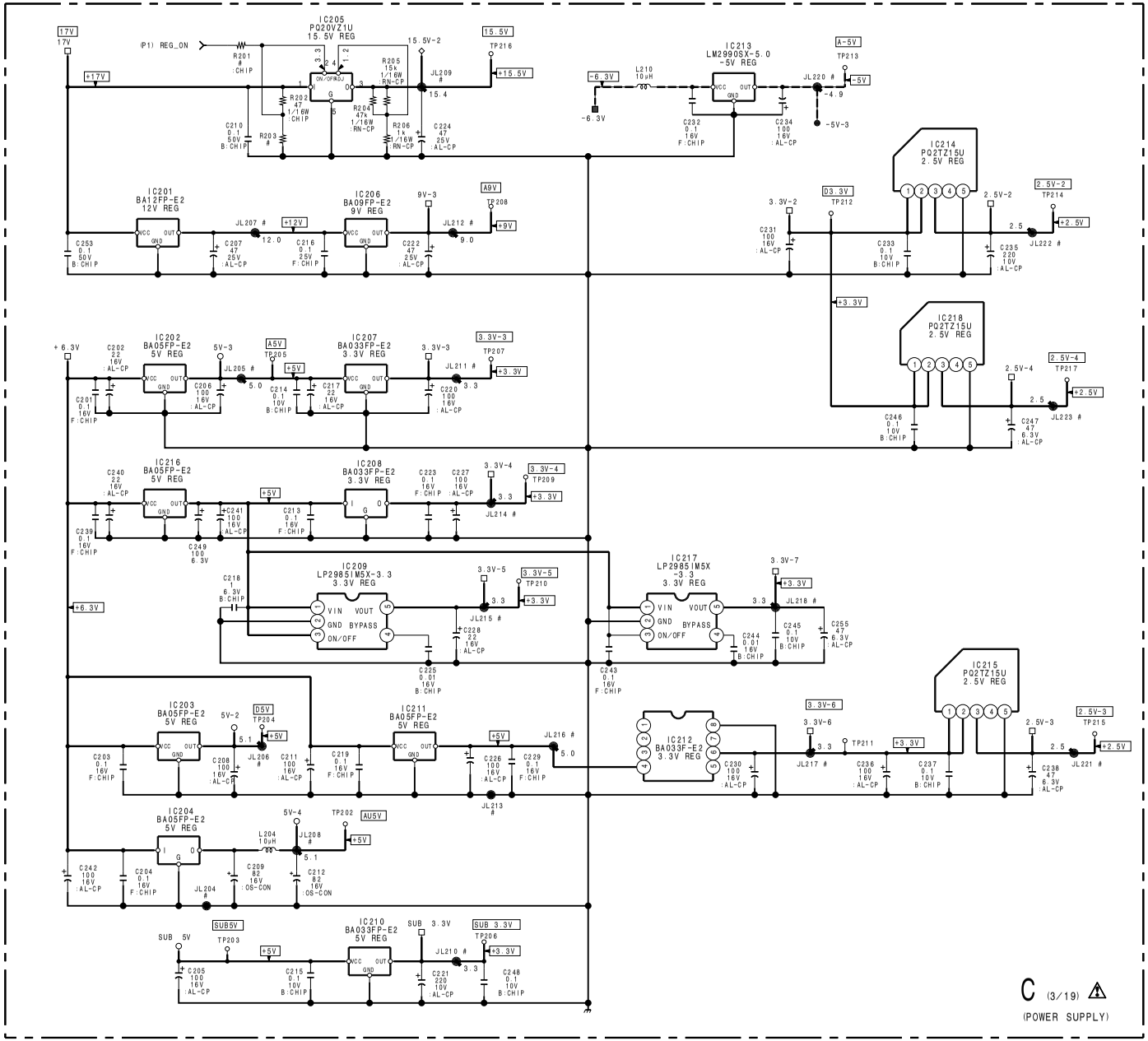

B-SS1738-WW-C-P3

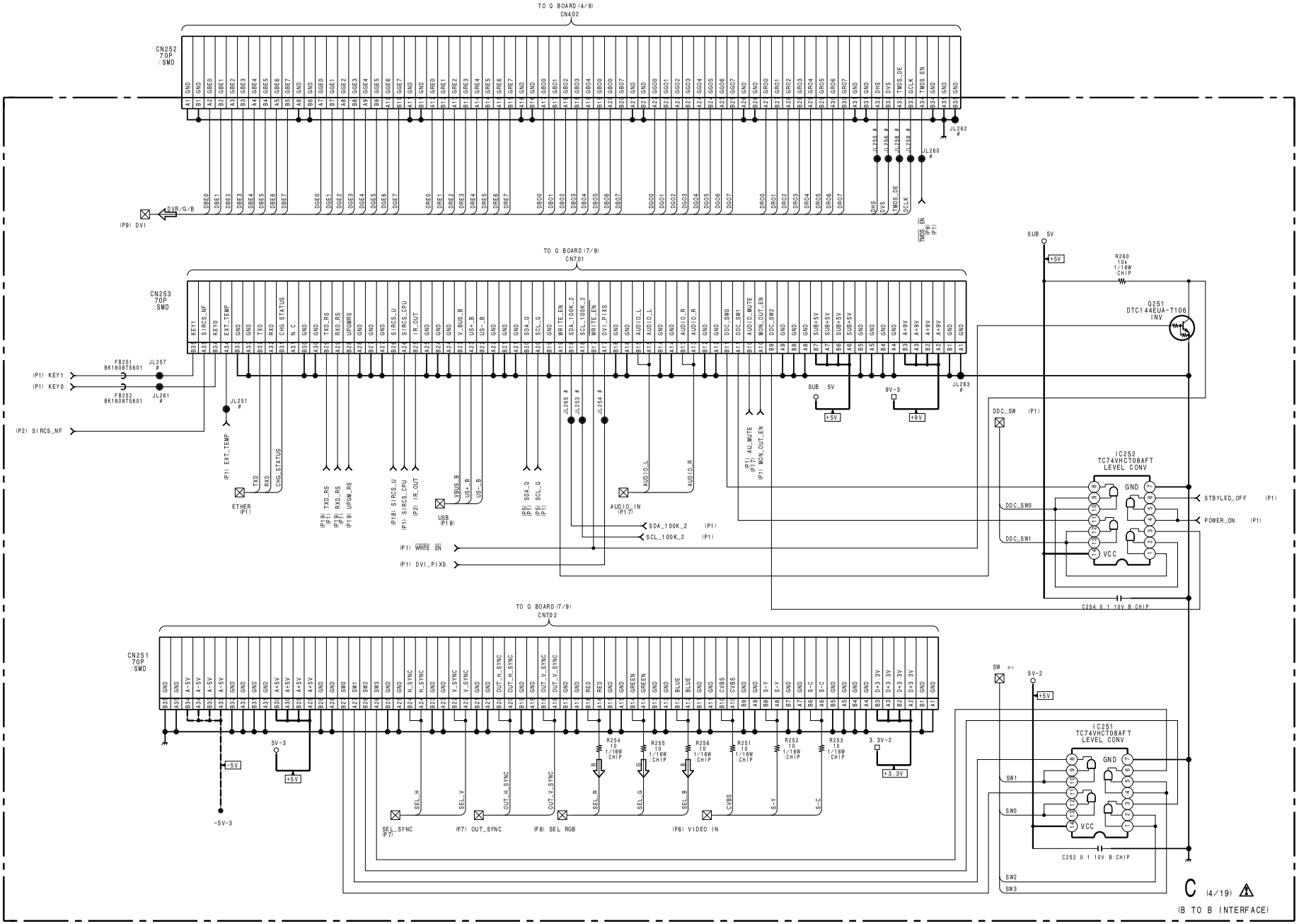
TO Q BOARD (4/9)
CN402
CN252
70P
:SMD
TO Q BOARD (7/9)
CN701
CN253
70P
:SMD
TO Q BOARD (7/9)
CN702
CN251
70P
:SMD
IC252
TC74VHCT08AFT
LEVEL CONV
IC251
TC74VHCT08AFT
LEVEL CONV
Q251
DTC144EUA-T106
INV
R260
10k
1/16W
:CHIP
C254 0.1 10V B:CHIP
C252 0.1 10V B:CHIP
(P9) DVI
(P1) KEY1
(P1) KEY0
(P2) SIRCS_NF
(P1) EXT_TEMP
ETHER
(P1)
USB
(P18)
AUDIO_IN
(P17)
(P1) WRITE_EN
(P1) DVI_PIXS
SDA_100K_2 (P1)
SCL_100K_2 (P1)
DDC_SW (P1)
STBYLED_OFF (P1)
POWER_ON (P1)
SEL_SYNC
(P7)
(P7) OUT_SYNC
(P8) SEL RGB
(P6) VIDEO IN
SW (P1)
C (4/19)
(B TO B INTERFACE)

 C (5/19)

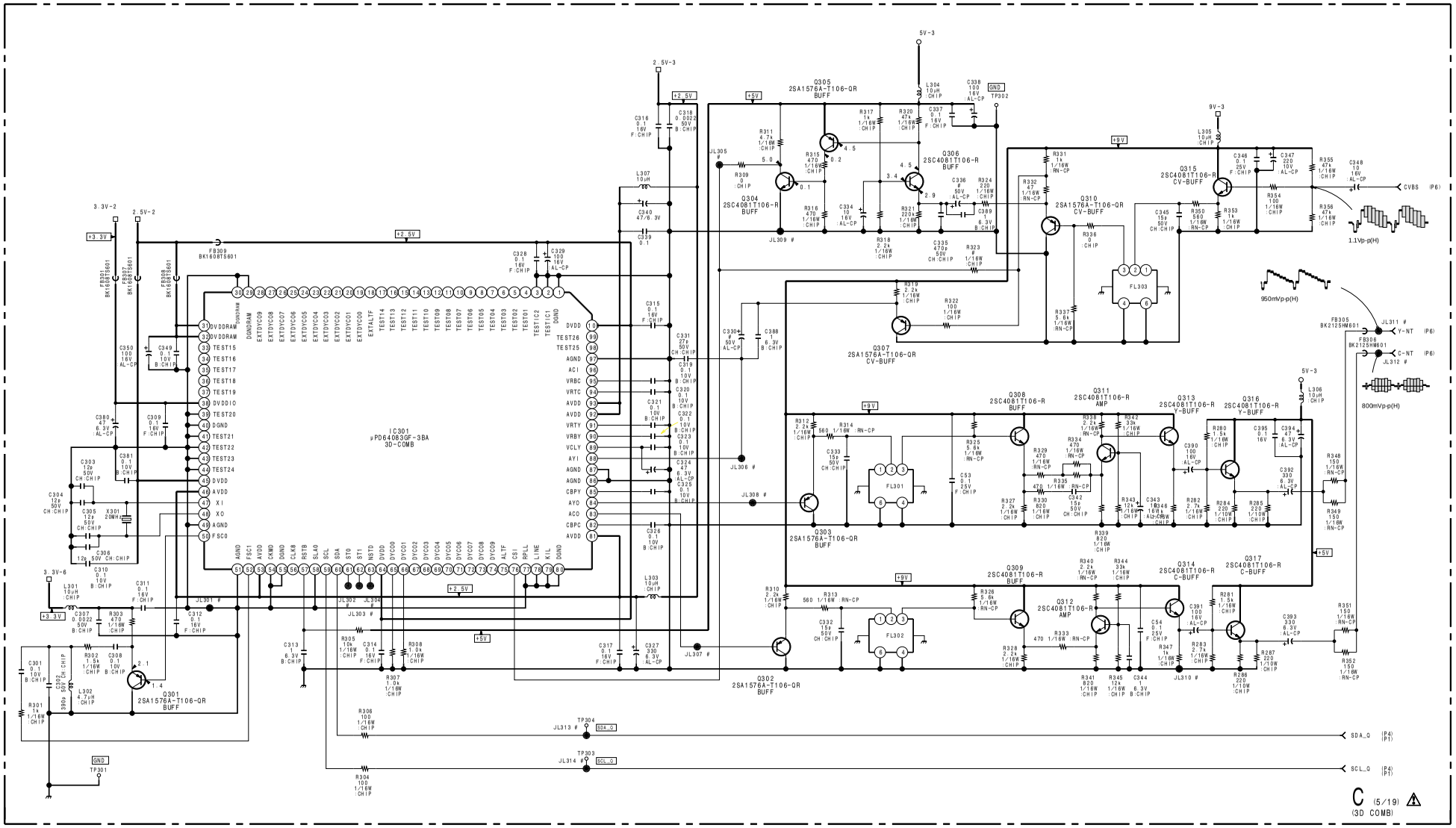

B-SS1738-WW-C-P5

6-21

C (6/19)

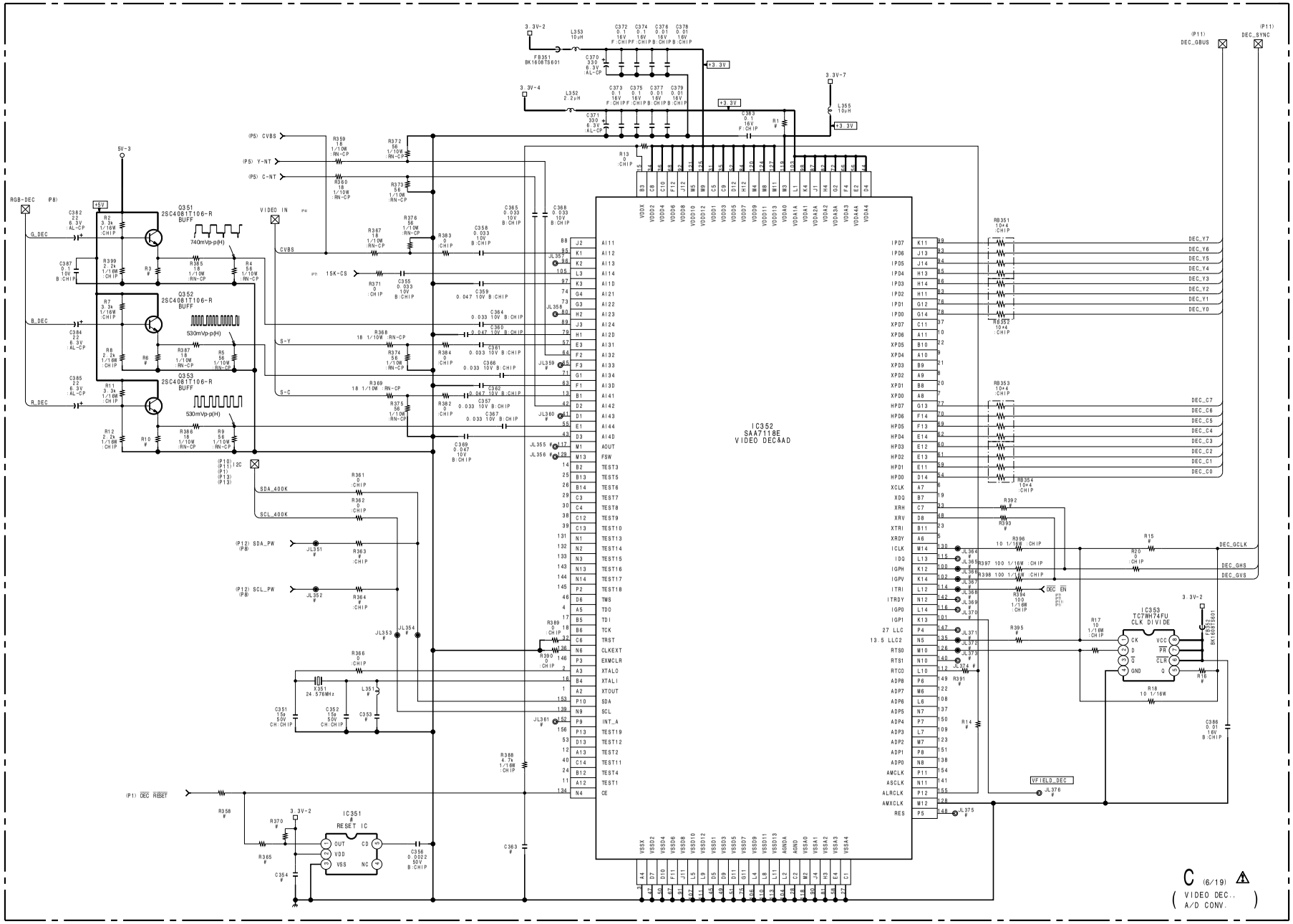

B-SS1738-WW-C-P6

6-22

 C (7/19)

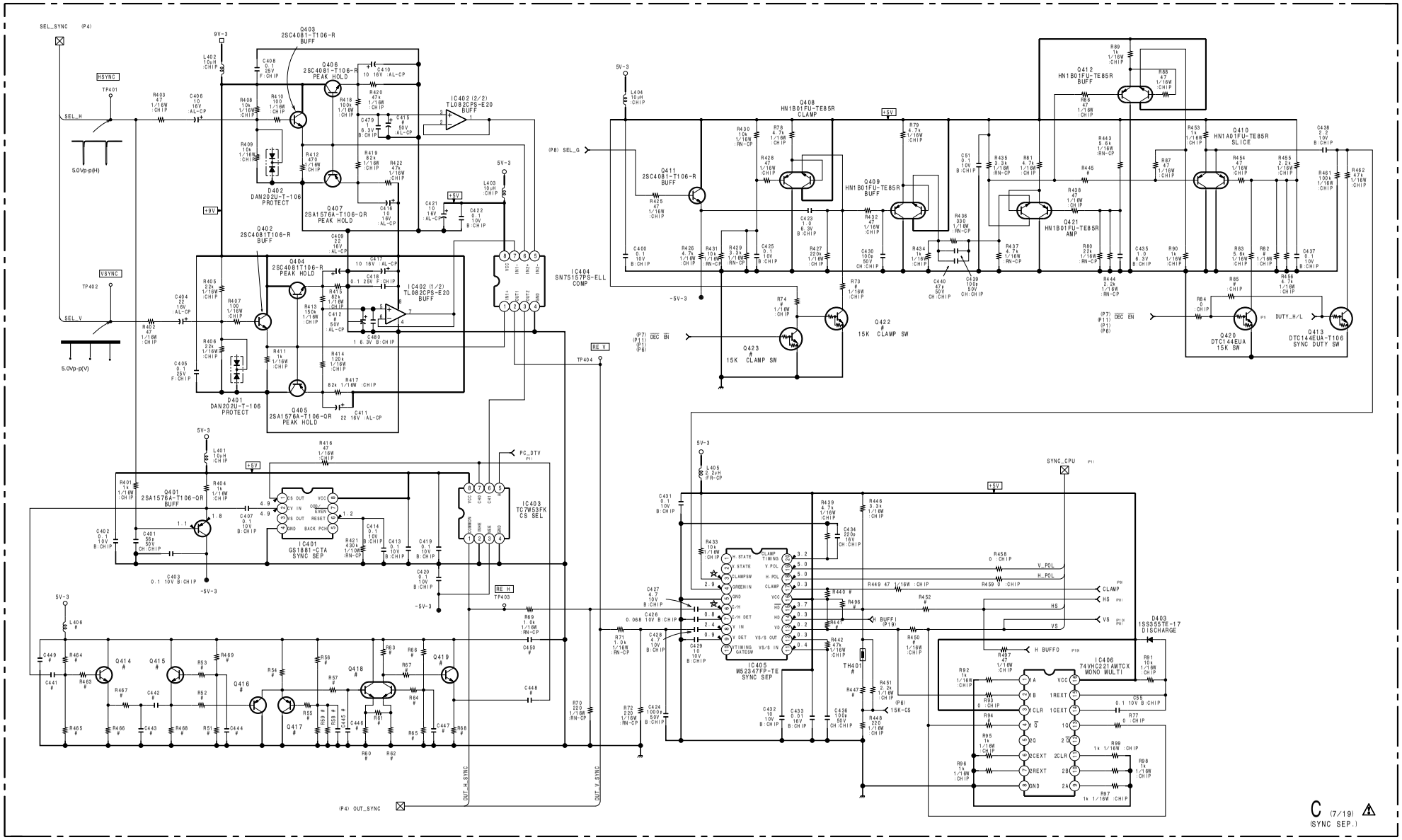

B-SS1738-WW-C-P7

 6-23

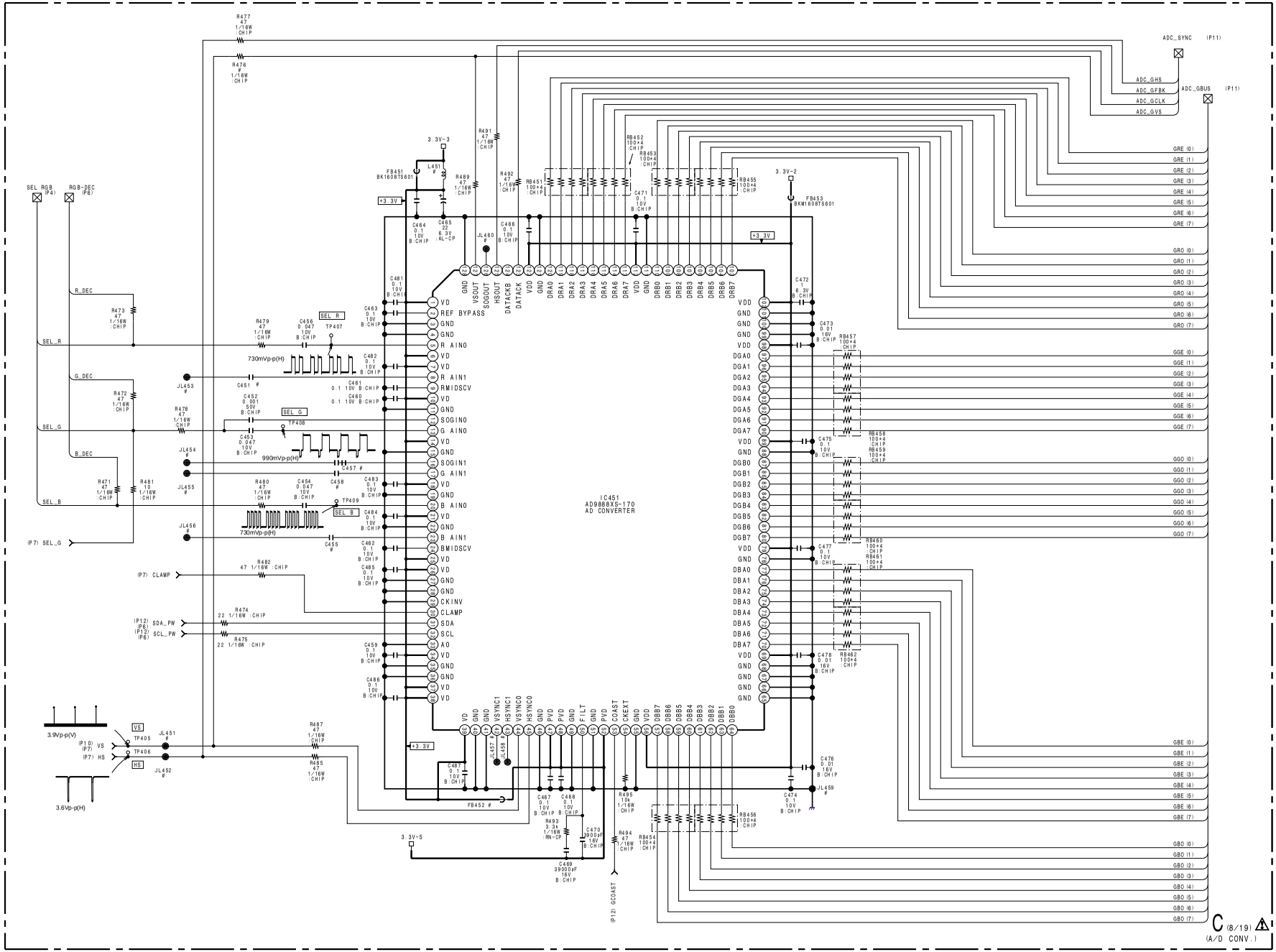
IC451
AD9888XS-170
AD CONVERTER
ADC_SYNC (P11)
ADC_GBUS (P11)
ADC_GHS
ADC_GFBK
ADC_GCLK
ADC_GVS
SEL_RGB (P4)
RGB-DEC (P6)
SEL_R
SEL_G
SEL_B
R_DEC
G_DEC
B_DEC
(P7) SEL_G
(P7) CLAMP
(P12) SDA_PW (P6)
(P12) SCL_PW (P6)
(P10) (P7) VS
(P7) HS
(P12) GCOAST
3.9Vp-p(V)
3.6Vp-p(H)
730mVp-p(H)
990mVp-p(H)
+3.3V
3.3V-3
3.3V-2
3.3V-5
C (8/19)
(A/D CONV.)

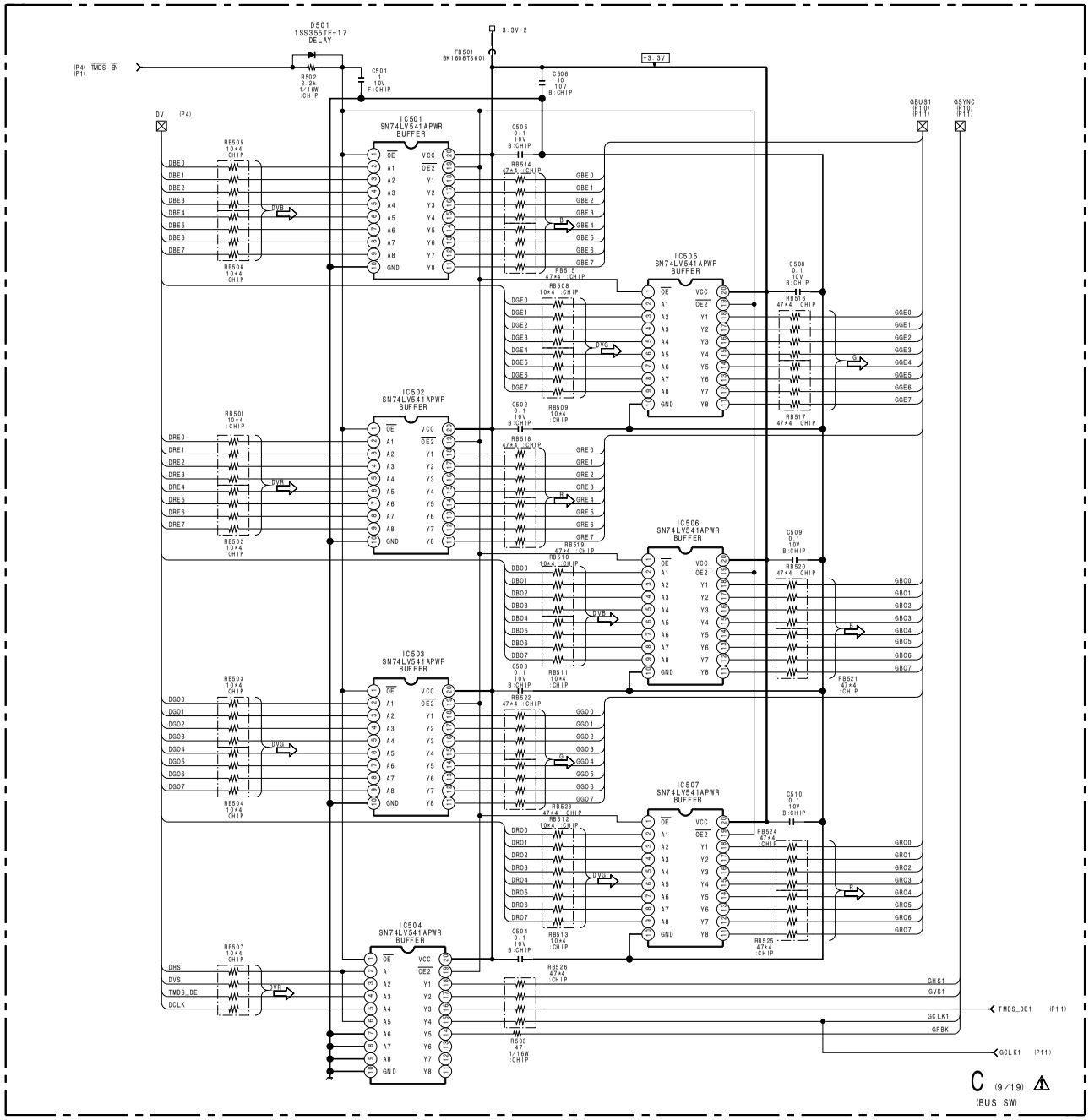
D501
1SS355TE-17
DELAY
(P4) TMDS_EN
(P7)
R502
2.2k
1/10W
:CHIP
C501
1
10V
F:CHIP
FB501
BK160BTS601
3.3V-2
+3.3V
C506
10
10V
B:CHIP
DVI (P4)
GBUS1
(P10)
(P11)
GSYNC
(P10)
(P11)
IC501
SN74LV541APWR
BUFFER
IC502
SN74LV541APWR
BUFFER
IC503
SN74LV541APWR
BUFFER
IC504
SN74LV541APWR
BUFFER
IC505
SN74LV541APWR
BUFFER
IC506
SN74LV541APWR
BUFFER
IC507
SN74LV541APWR
BUFFER
OE
A1
A2
A3
A4
A5
A6
A7
A8
GND
VCC
OE2
Y1
Y2
Y3
Y4
Y5
Y6
Y7
Y8
DBE0
DBE1
DBE2
DBE3
DBE4
DBE5
DBE6
DBE7
DRE0
DRE1
DRE2
DRE3
DRE4
DRE5
DRE6
DRE7
DGO0
DGO1
DGO2
DGO3
DGO4
DGO5
DGO6
DGO7
DHS
DVS
TMDS_DE
DCLK
GBE0
GBE1
GBE2
GBE3
GBE4
GBE5
GBE6
GBE7
DGE0
DGE1
DGE2
DGE3
DGE4
DGE5
DGE6
DGE7
GGE0
GGE1
GGE2
GGE3
GGE4
GGE5
GGE6
GGE7
GRE0
GRE1
GRE2
GRE3
GRE4
GRE5
GRE6
GRE7
DBO0
DBO1
DBO2
DBO3
DBO4
DBO5
DBO6
DBO7
GBO0
GBO1
GBO2
GBO3
GBO4
GBO5
GBO6
GBO7
DRO0
DRO1
DRO2
DRO3
DRO4
DRO5
DRO6
DRO7
GRO0
GRO1
GRO2
GRO3
GRO4
GRO5
GRO6
GRO7
GHS1
GVS1
GCLK1
GFBK
TMDS_DE1 (P11)
GCLK1 (P11)
DVR
C (9/19)
(BUS SW)

C (10/19)

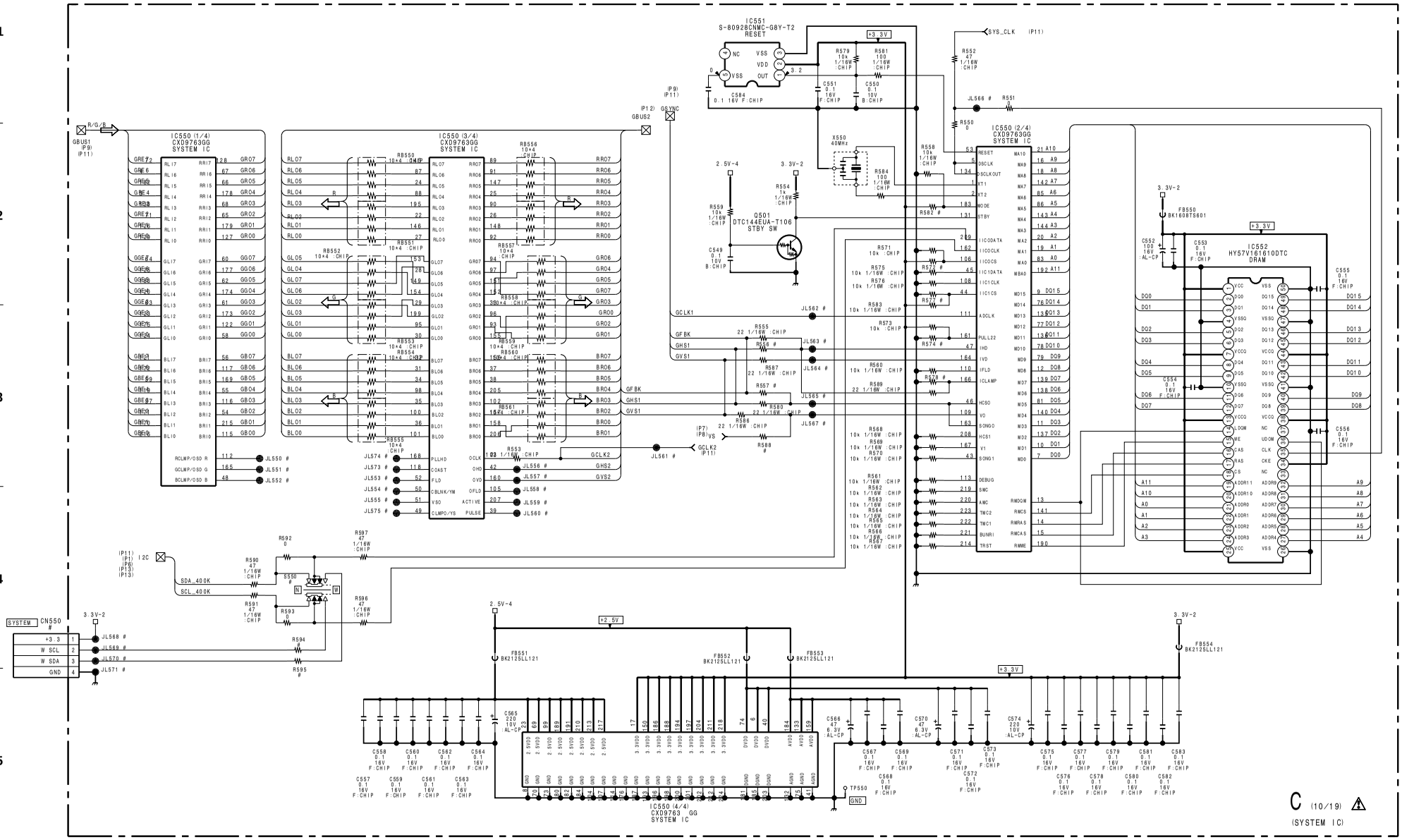

B-SS1738-WW-C-P10

6-26

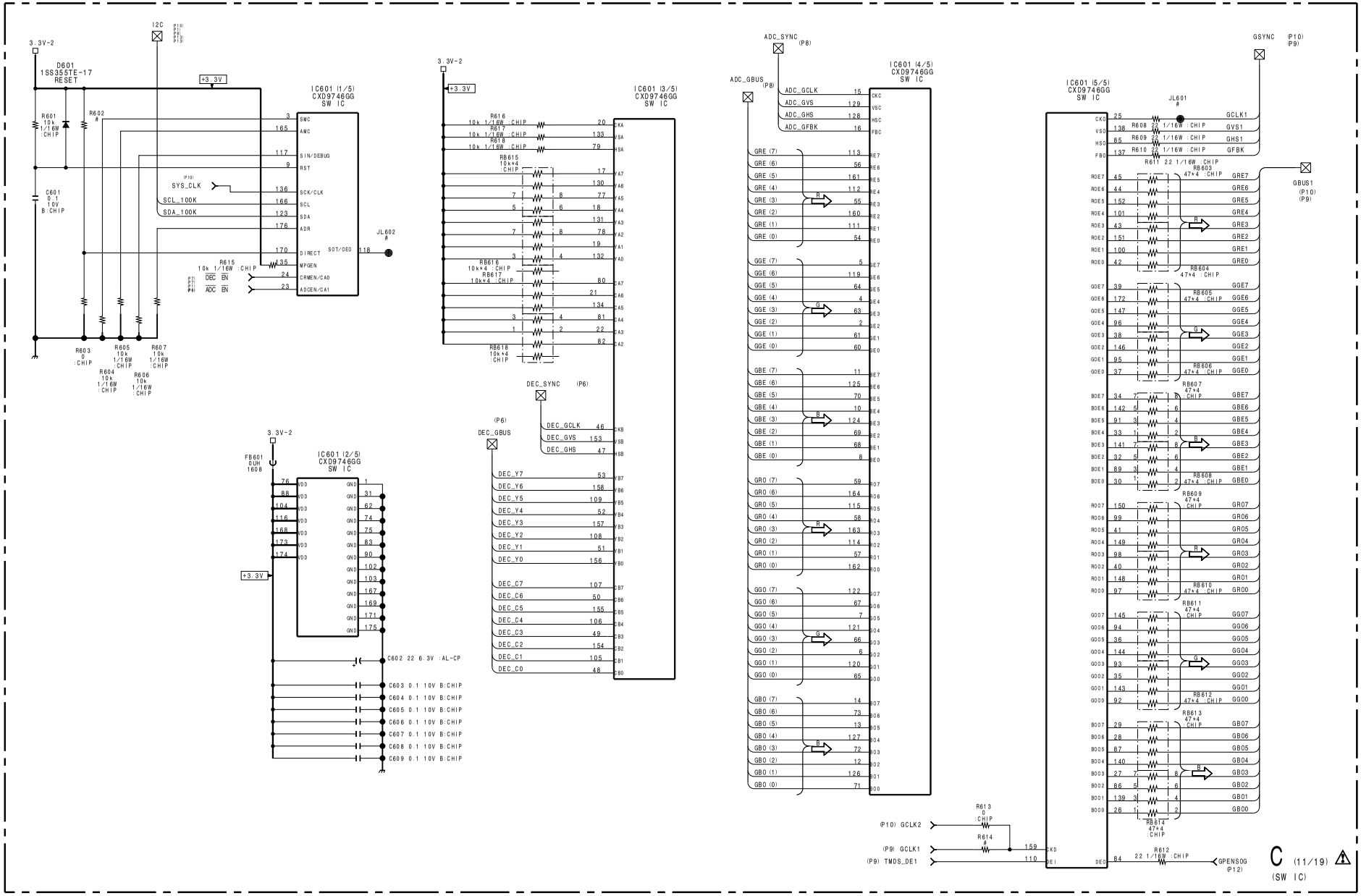

B-SS1738-WW-C-P11

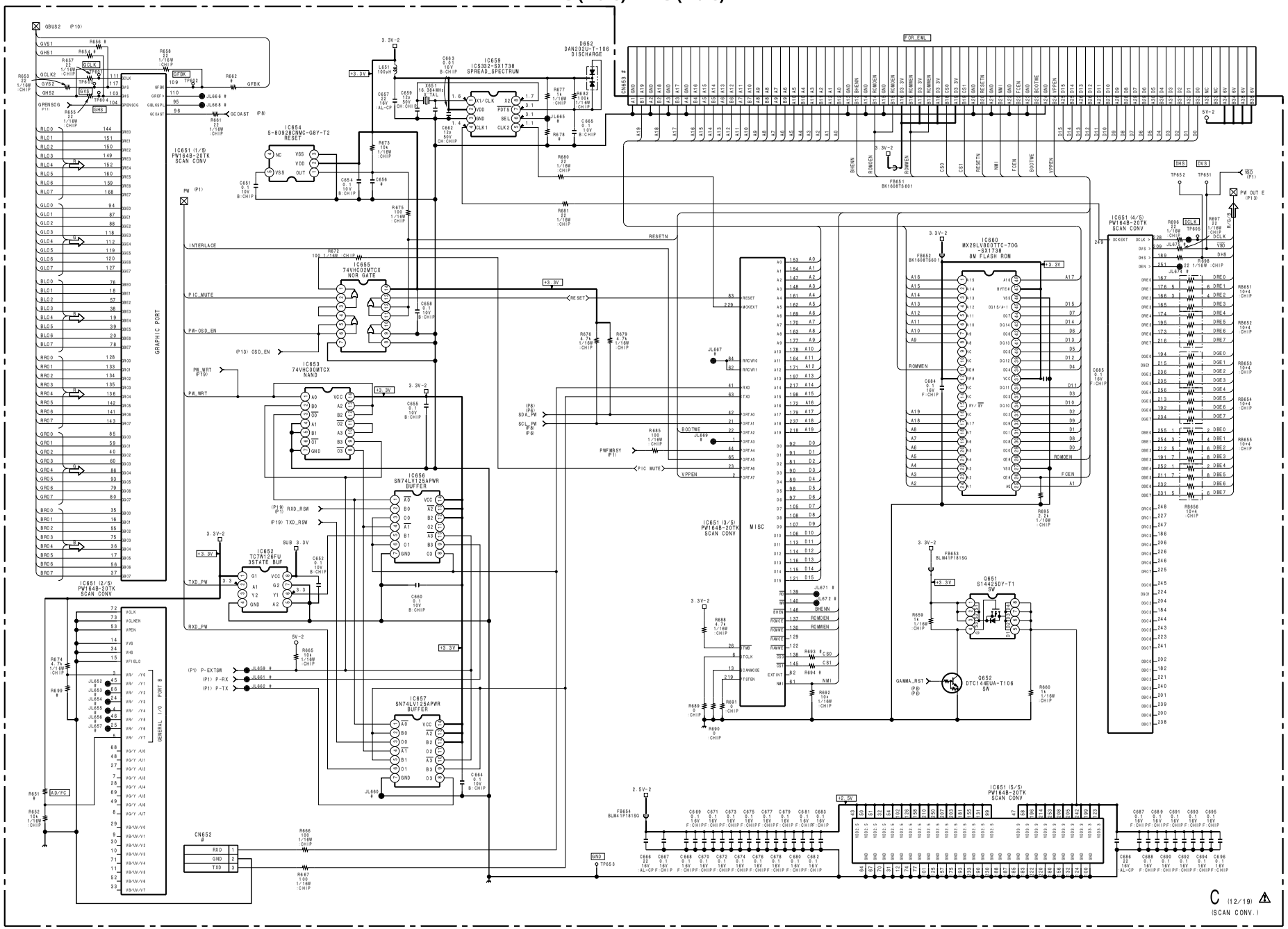
IC659
ICS332-SX1738
SPREAD_SPECTRUM
IC654
S-80928CNMC-G8Y-T2
RESET
IC651 (1/5)
PW164B-20TK
SCAN CONV.
GRAPHIC PORT
IC655
74VHC02MTCX
NOR GATE
IC653
74VHC00MTCX
NAND
IC656
SN74LV125APWR
BUFFER
IC652
TC7W126FU
3STATE BUF
IC657
SN74LV125APWR
BUFFER
IC651 (2/5)
PW164B-20TK
SCAN CONV
GENERAL I/O PORT B
IC651 (3/5)
PW164B-20TK
SCAN CONV
MISC
IC660
MX29LV800TTC-70G
-SX1738
8M FLASH ROM
IC651 (4/5)
PW164B-20TK
SCAN CONV
IC651 (5/5)
PW164B-20TK
SCAN CONV
Q651
S14425DY-T1
SW
Q652
DTC144EUA-T106
SW
D652
DAN202U-T-106
DISCHARGE
FOR EML
CN652
RXD
GND
TXD
C (12/19)
(SCAN CONV.)

A B C D E F G H

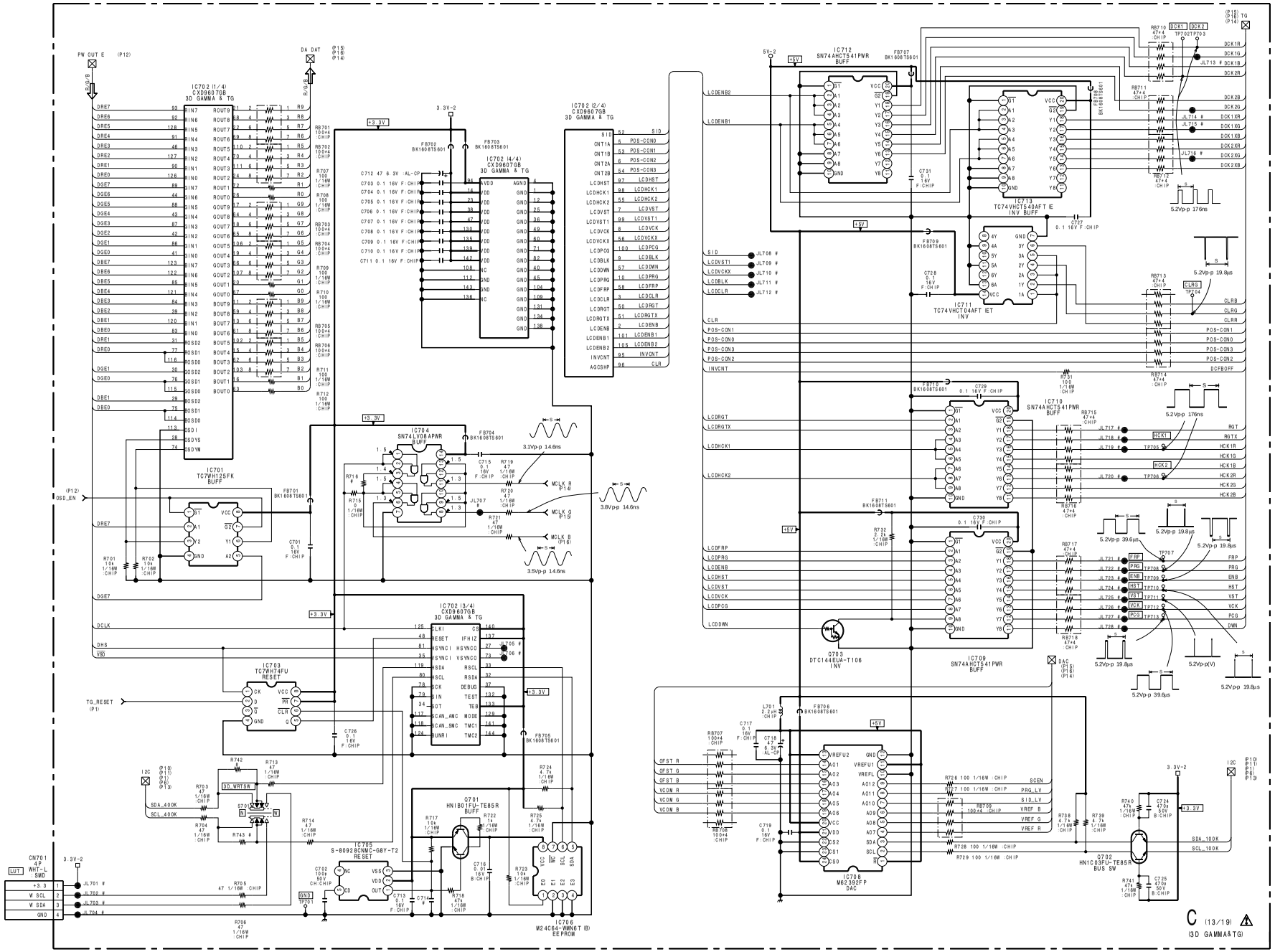
IC702 (1/4) CXD9607GB 3D GAMMA & TG
IC702 (2/4) CXD9607GB 3D GAMMA & TG
IC702 (4/4) CXD9607GB 3D GAMMA & TG
IC702 (3/4) CXD9607GB 3D GAMMA & TG
IC701 TC7WH125FK BUFF
IC703 TC7WH74FU RESET
IC704 SN74LV08APWR BUFF
IC705 S-8092BCNMC-G8Y-T2 RESET
IC706 M24C64-WMN6T(B) EEPROM
IC708 M62392FP DAC
IC709 SN74AHCT541PWR BUFF
IC710 SN74AHCT541PWR BUFF
IC711 TC74VHCT04AFT IET INV
IC712 SN74AHCT541PWR BUFF
IC713 TC74VHCT540AFT IE INV BUFF
Q701 HN1B01FU-TE85R BUFF
Q702 HN1C03FU-TE85R BUS SW
Q703 DTC144EUA-T106 INV
CN701 4P WHT-L SMD
C (13/19)
(3D GAMMA&TG)

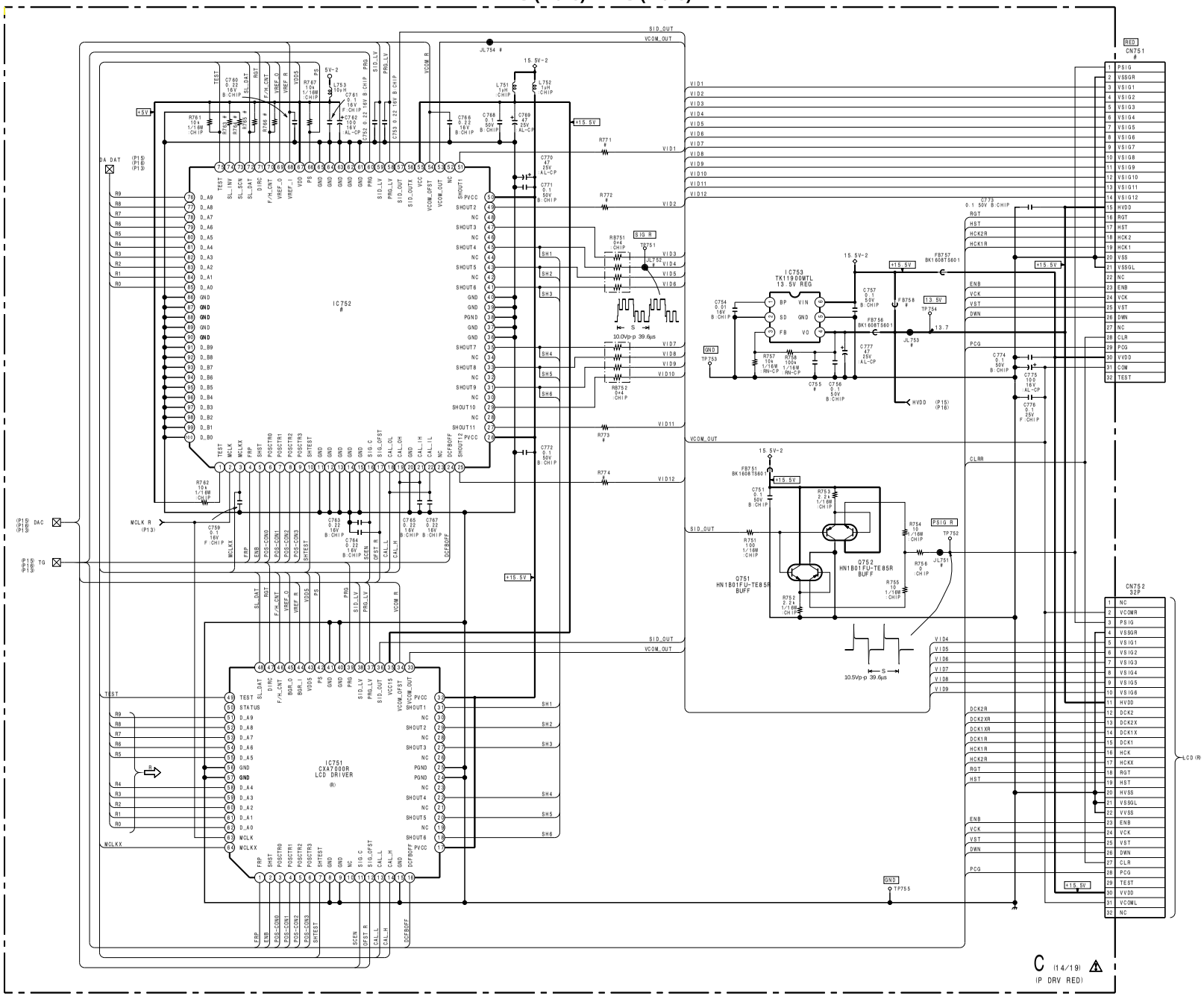
IC752
IC751
CXA7000R
LCD DRIVER
IC753
TK11900MTL
13.5V REG
Q752
HN1B01FU-TE85R
BUFF
Q751
HN1B01FU-TE85R
BUFF
CN751
CN752
32P
LCD (R)
C (14/19)
(P DRV RED)

C (15/19)

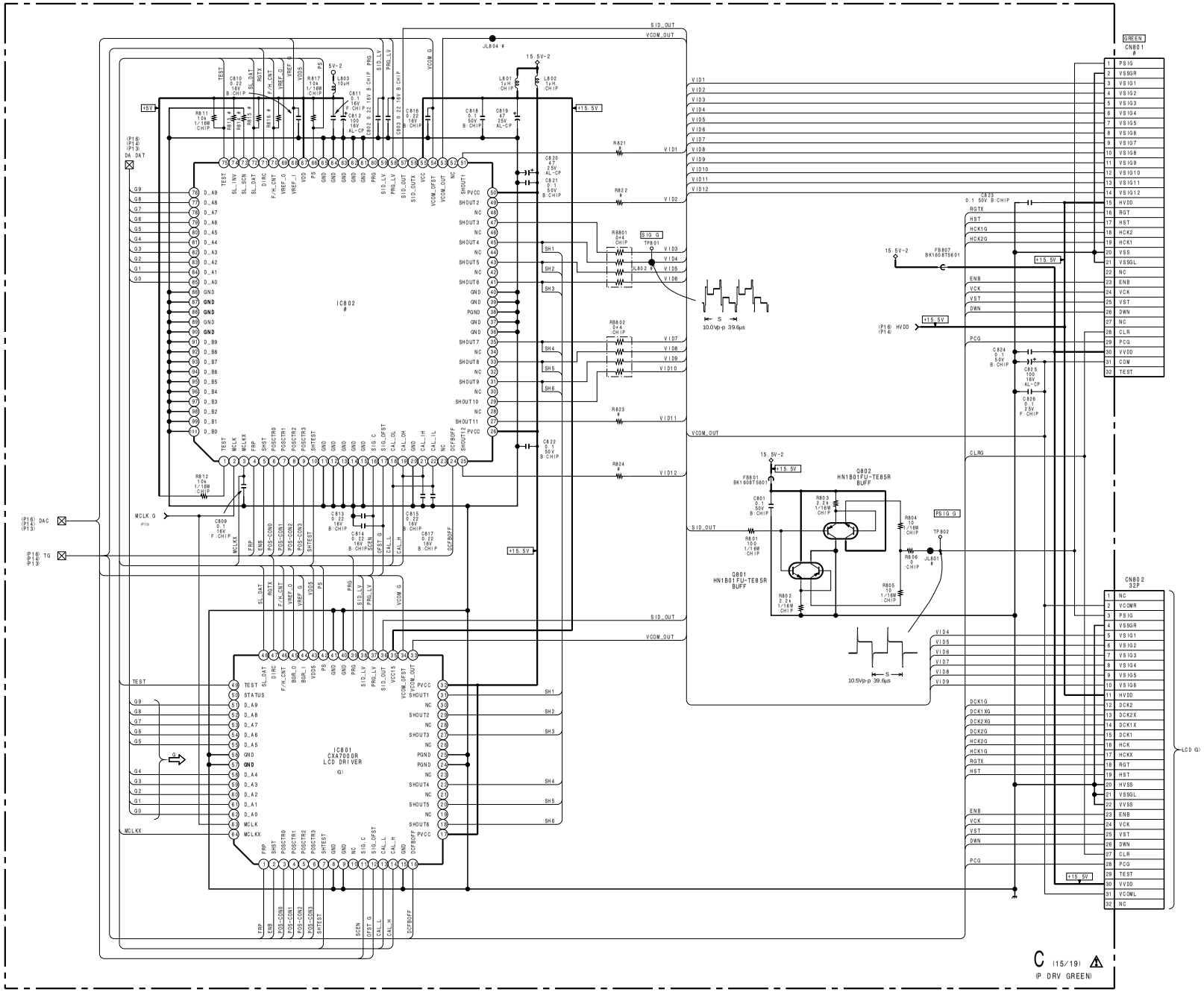
IC802
IC801
CXA7000R
LCD DRIVER
(G)
CN801
CN802
32P
GREEN
LCD (G)
Q802
HN1B01FU-TE85R
BUFF
Q801
HN1B01FU-TE85R
BUFF
SIG G
PSIG G
MCLK G
DA DAT
DAC
TG
HVDD
VVDD
VVSS
VCOML
C (15/19)
(P DRV GREEN)

 C (16/19)

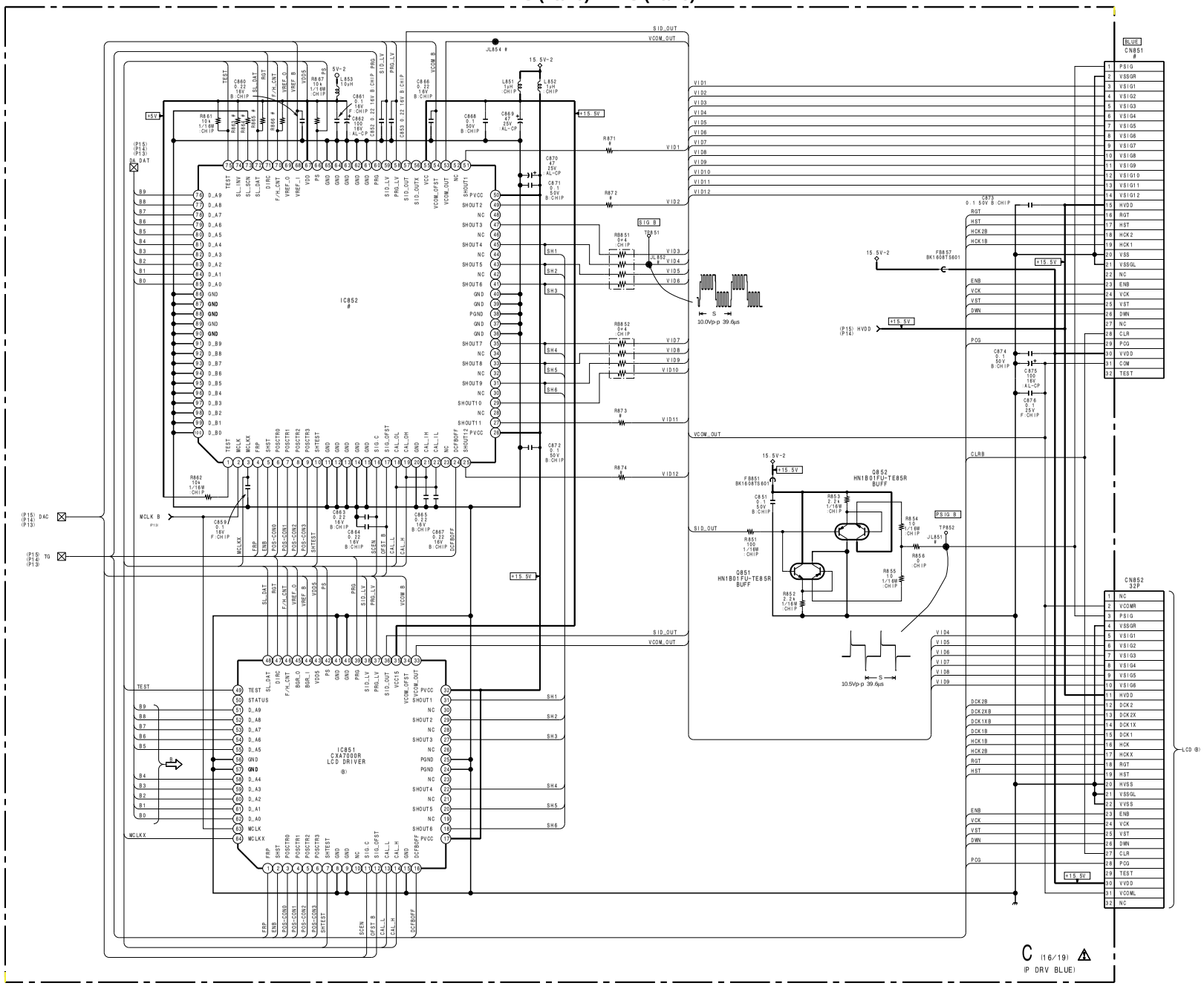

 6-32

B-SS1738-WW-C-P16

 C (17/19)

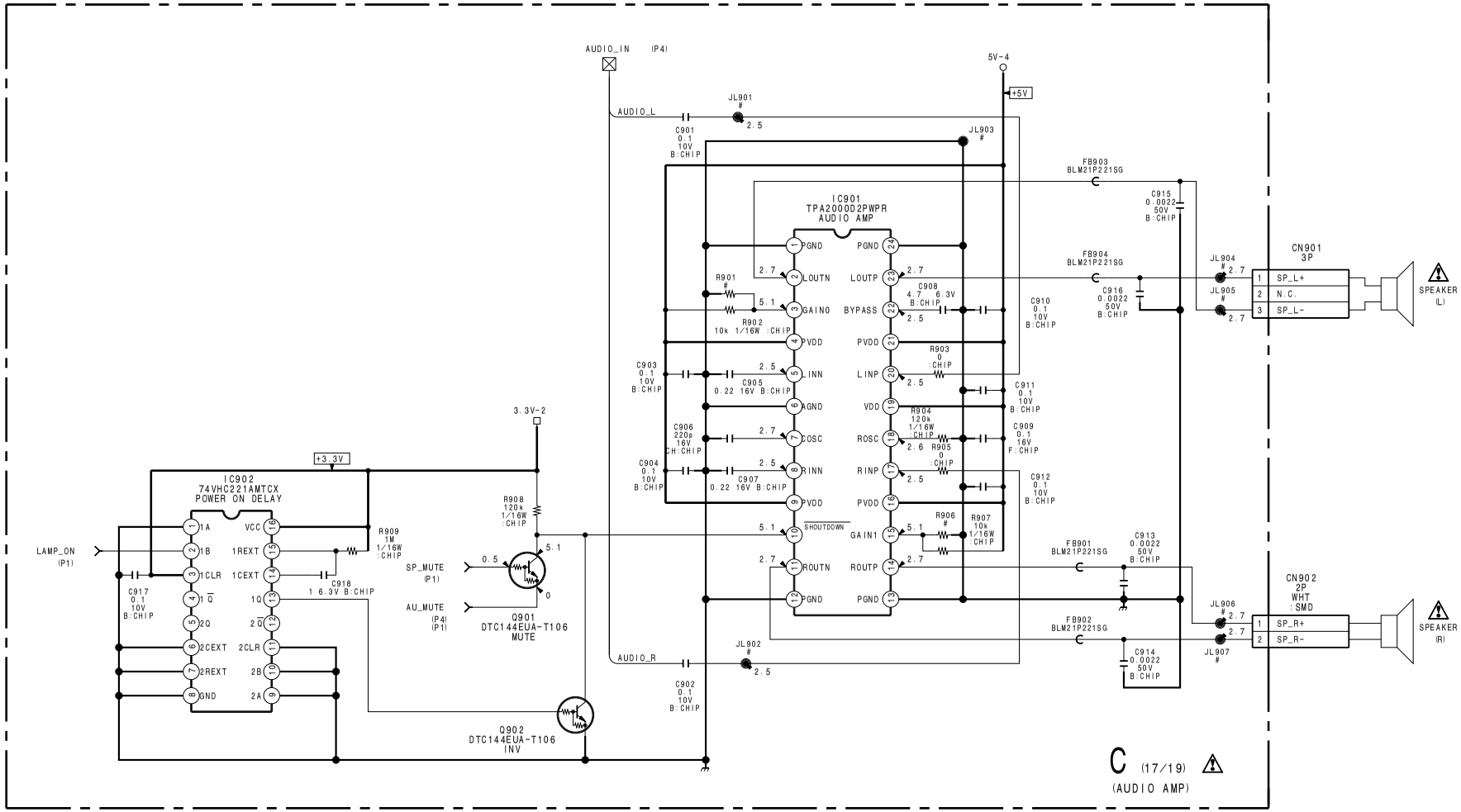

B-SS1738-WW-C-P17

 6-33

 C (18/19)

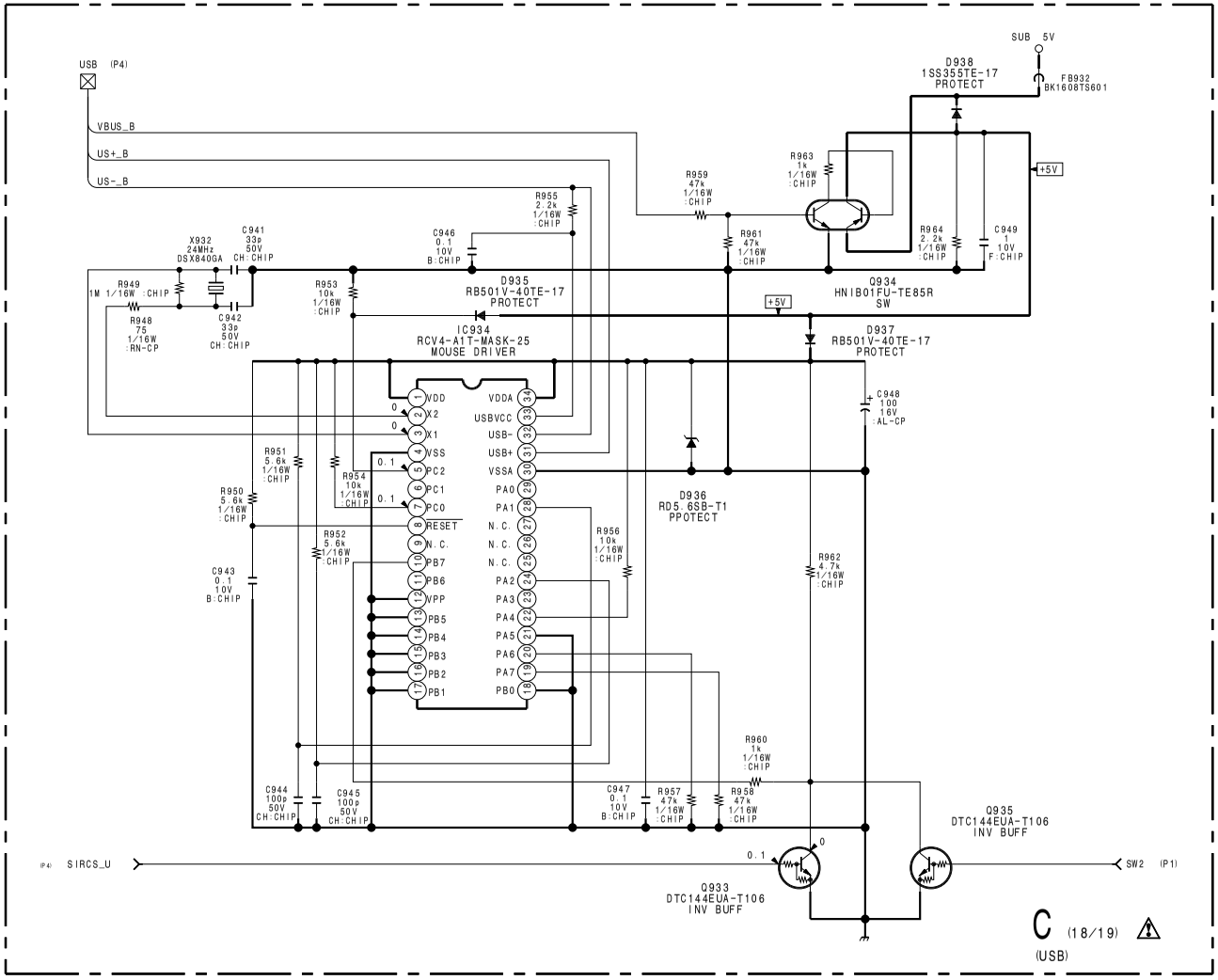

B-SS1738-WW-C-P18

 6-34

 C (19/19)

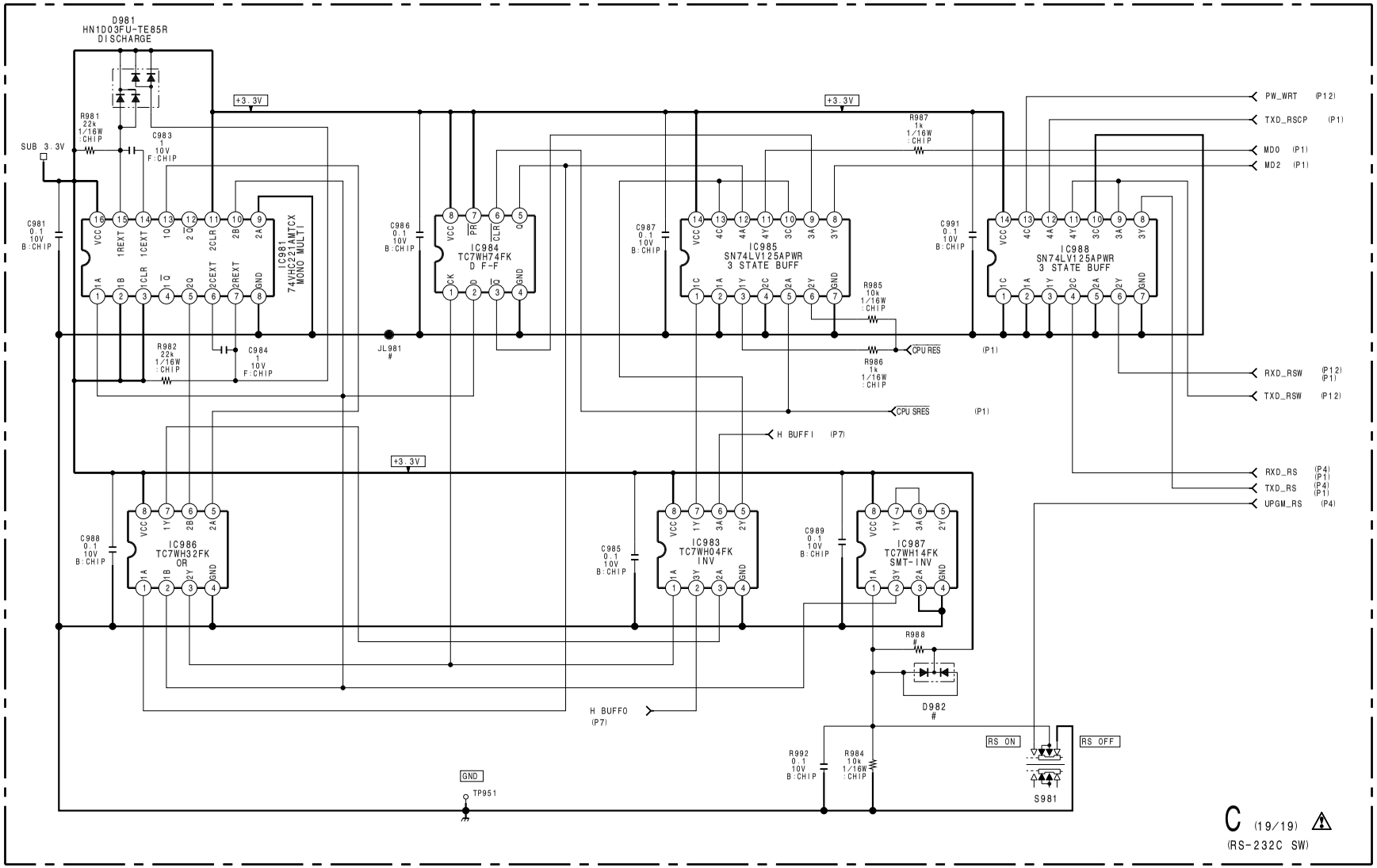

B-SS1738-WW-C-P19

 6-35

C BOARD

*:B SIDE

D101	* F-2	IC712	* D-2	TP101	G-3
D102	A-1	IC713	* D-2	TP102	H-2
D103	A-2	IC751	E-6	TP103	E-1
D104	A-3	IC752	E-6	TP202	J-3
D105	A-2	IC753	* F-7	TP203	H-2
D152	F-1	IC801	D-4	TP204	E-1
D155	E-1	IC802	D-4	TP205	E-8
D156	E-2	IC851	E-5	TP206	H-2
D157	E-2	IC852	E-5	TP207	F-8
D158	E-3	IC901	A-2	TP208	C-9
D401	G-9	IC902	* A-2	TP209	F-7
D402	G-9	IC934	J-8	TP210	F-8
D403	* H-7	IC981	* J-8	TP211	D-7
D501	* A-7	IC983	* J-8	TP212	A-5
D601	* B-9	IC984	J-9	TP213	J-9
D652	* B-2	IC985	* J-9	TP214	B-5
D935	* J-8	IC986	J-8	TP215	D-8
D936	* J-8	IC987	* J-8	TP216	G-3
D937	* J-8	IC988	* J-9	TP217	B-7
D938	* J-8			TP301	F-9
D981	* J-9	Q101	* F-2	TP302	D-9
D982	J-8	Q102	* F-2	TP303	D-9
		Q103	* H-2	TP304	D-9
IC103	H-2	Q104	* A-1	TP401	H-9
IC104	* F-2	Q105	* A-1	TP402	G-9
IC105	* D-1	Q106	* A-2	TP403	G-8
IC106	* G-2	Q107	* A-3	TP404	G-8
IC107	* H-2	Q108	* A-1	TP405	F-9
IC108	* G-3	Q109	H-2	TP406	G-9
IC109	* G-2	Q151	* F-1	TP407	G-8
IC154	B-1	Q153	E-3	TP408	G-8
IC201	J-2	Q251	* F-3	TP409	G-9
IC202	* H-8	Q301	E-9	TP550	A-5
IC203	* E-1	Q302	* D-8	TP601	C-3
IC204	H-3	Q303	* D-8	TP602	C-4
IC205	H-3	Q304	D-8	TP603	C-4
IC206	* C-9	Q305	D-8	TP604	C-3
IC207	* F-7	Q306	D-8	TP605	C-2
IC208	* E-7	Q307	* E-8	TP651	C-3
IC209	* F-7	Q308	* D-7	TP652	C-3
IC210	J-2	Q309	* C-7	TP653	A-2
IC211	* E-8	Q310	* D-7	TP701	C-1
IC212	* E-8	Q311	* D-7	TP702	D-2
IC213	J-9	Q312	* D-7	TP703	E-2
IC214	* A-4	Q313	* D-7	TP704	D-1
IC215	* D-8	Q314	* D-7	TP705	E-1
IC216	* H-8	Q315	* D-7	TP706	E-1
IC217	* E-7	Q316	* D-6	TP707	D-1
IC218	* B-7	Q317	* D-6	TP708	D-1
IC251	* H-3	Q351	* C-7	TP709	D-1
IC252	F-3	Q352	* C-7	TP710	D-1
IC301	E-9	Q353	* C-7	TP711	D-1
IC351	* C-8	Q401	H-9	TP712	D-1
IC352	C-8	Q402	* G-9	TP713	D-1
IC353	* D-8	Q403	* G-9	TP751	D-6
IC401	H-9	Q404	* G-9	TP752	E-7
IC402	* G-8	Q405	* G-9	TP753	F-6
IC403	* H-9	Q406	* G-9	TP754	D-7
IC404	* G-8	Q407	* G-9	TP755	D-6
IC405	G-8	Q408	G-8	TP801	C-5
IC406	* H-8	Q409	* G-8	TP802	C-5
IC451	F-9	Q410	* G-8	TP851	E-4
IC501	A-8	Q411	F-8	TP852	E-3
IC502	A-7	Q412	G-8	TP951	J-8
IC503	A-8	Q413	* G-8		
IC504	* B-9	Q414	* H-9		
IC505	A-7	Q415	* H-8		
IC506	A-9	Q416	* H-8		
IC507	A-8	Q417	* H-8		
IC550	B-5	Q418	* H-8		
IC551	C-6	Q419	* H-8		
IC552	* B-5	Q420	G-7		
IC601	B-9	Q421	* G-8		
IC651	B-4	Q422	F-7		
IC652	C-2	Q423	F-8		
IC653	* C-2	Q501	* B-6		
IC654	* A-3	Q651	A-3		
IC655	* B-2	Q652	A-3		
IC656	* B-2	Q701	* D-2		
IC657	* C-2	Q702	* E-2		
IC659	B-2	Q703	* D-2		
IC660	* A-3	Q751	* D-7		
IC701	* D-3	Q752	* D-7		
IC702	D-3	Q801	* D-5		
IC703	* D-4	Q802	* C-5		
IC704	D-3	Q851	* E-4		
IC705	* C-2	Q852	* E-4		
IC706	* D-2	Q901	A-1		
IC708	E-2	Q902	A-1		
IC709	D-2	Q933	H-8		
IC710	E-2	Q934	* J-7		
IC711	D-1	Q935	* J-8		

C C

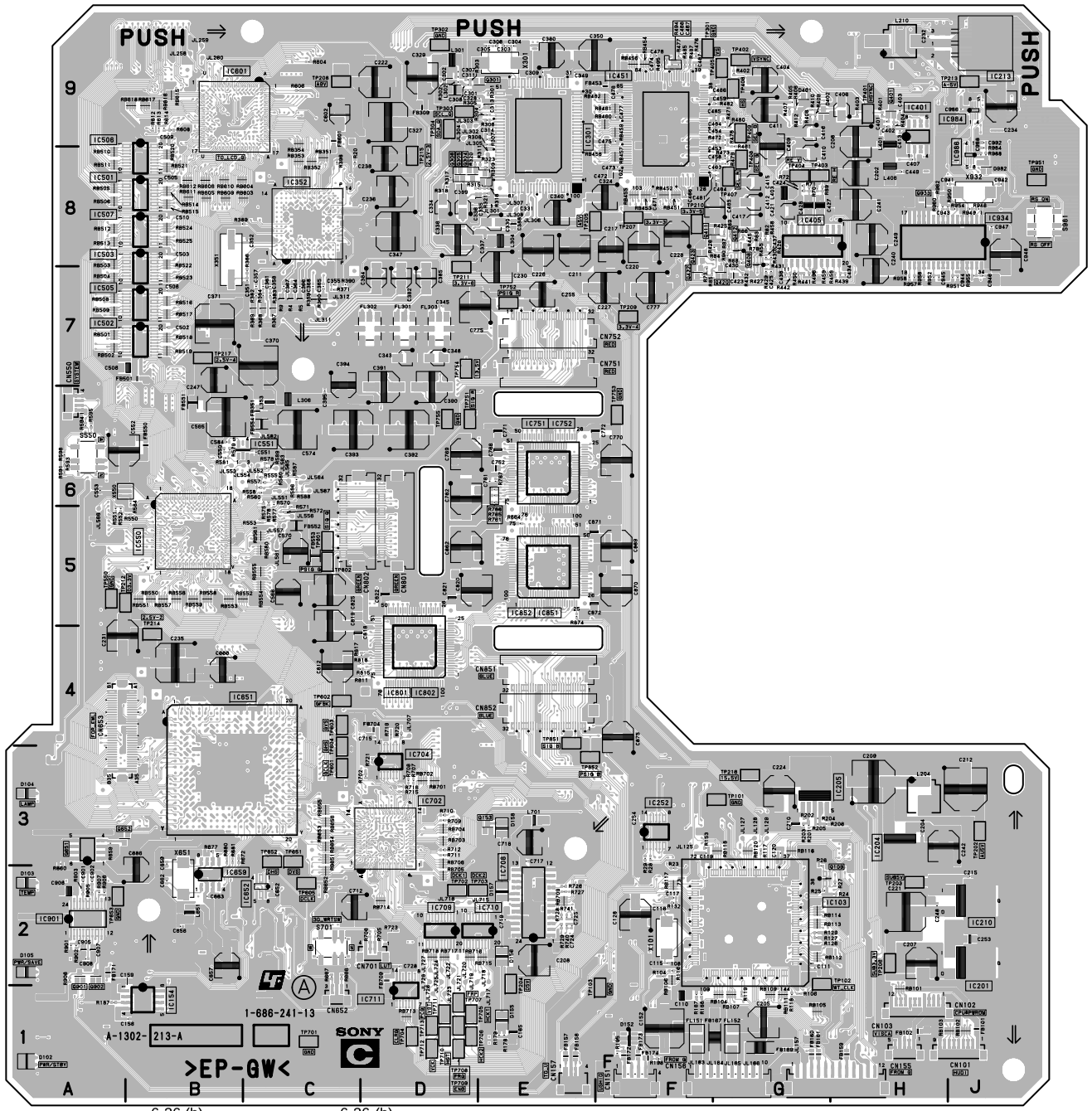

C -A SIDE-
SUFFIX: -13

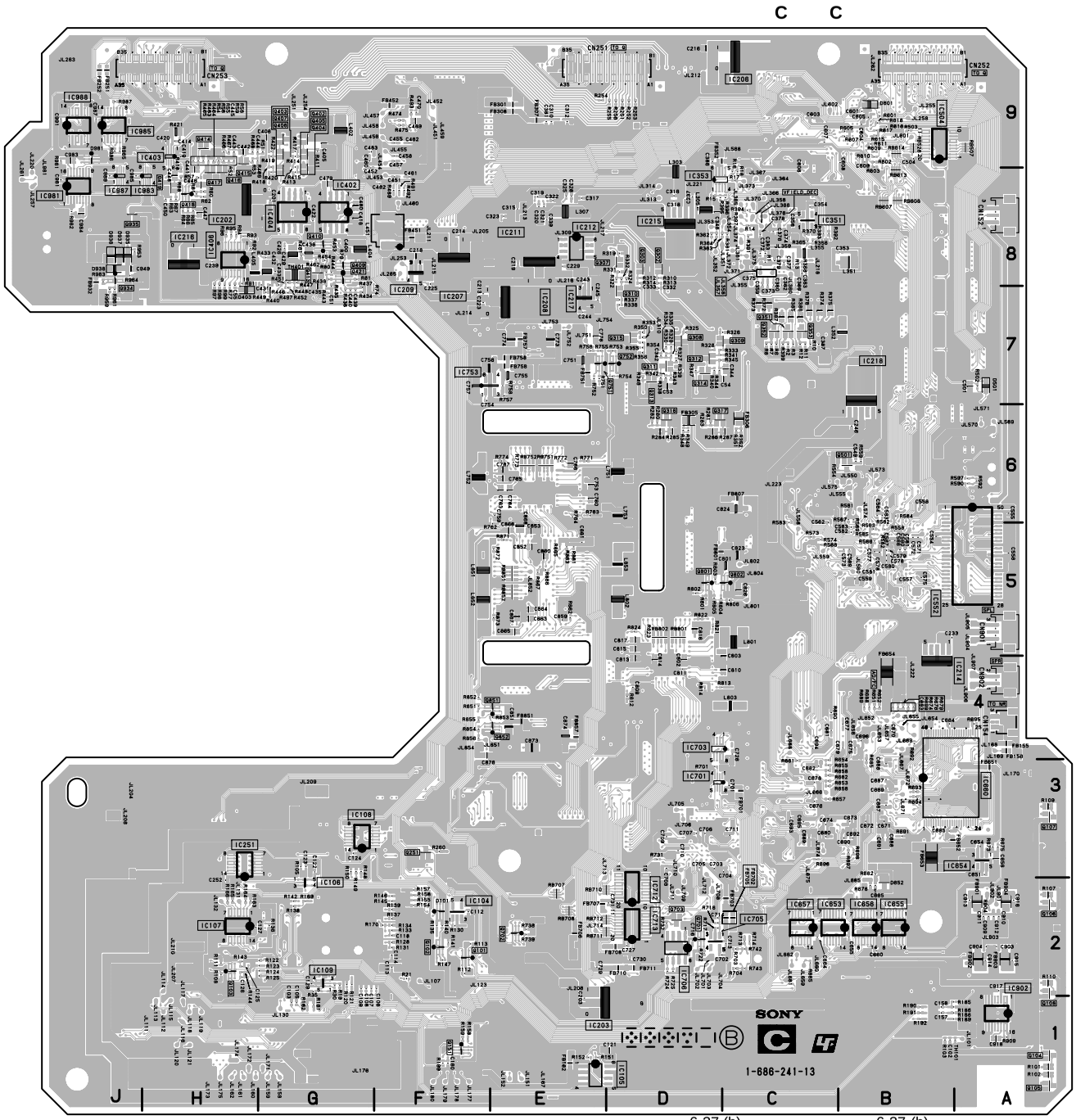

C -B SIDE-
SUFFIX: -13

C BOARD

*:B SIDE

D101	* F-2	IC712	* D-2	TP102	G-2
D102	A-1	IC713	* D-2	TP103	F-1
D103	A-2	IC751	E-6	TP202	J-3
D104	A-3	IC752	E-6	TP203	H-2
D105	A-2	IC753	* F-7	TP204	E-2
D152	F-1	IC801	D-4	TP205	E-8
D155	E-1	IC802	D-4	TP206	H-2
D156	E-2	IC851	E-5	TP207	F-8
D157	E-2	IC852	E-5	TP208	C-9
D158	E-3	IC901	A-2	TP209	F-7
D401	G-9	IC902	* A-1	TP210	F-8
D402	G-9	IC934	H-8	TP211	D-7
D403	* H-7	IC981	* J-8	TP212	A-5
D501	* A-7	IC983	* H-8	TP213	J-9
D601	* B-9	IC984	J-9	TP214	B-4
D652	* B-2	IC985	* J-9	TP215	D-8
D935	* H-8	IC986	J-8	TP216	G-3
D936	* J-8	IC987	* J-8	TP217	B-7
D937	* J-8	IC988	* J-9	TP301	F-9
D938	* J-8			TP302	D-9
D981	* J-9	Q101	* F-2	TP303	D-9
D982	D-8	Q102	* F-2	TP304	D-9
		Q103	* H-2	TP401	H-9
IC103	G-2	Q104	* A-1	TP402	G-9
IC104	* F-2	Q105	* A-1	TP403	G-8
IC105	* E-1	Q106	* A-2	TP404	G-8
IC106	* G-2	Q107	* A-3	TP405	G-9
IC107	* H-2	Q108	* A-2	TP406	G-9
IC108	* G-3	Q109	G-2	TP407	G-8
IC109	* G-2	Q151	* F-1	TP408	G-8
IC154	B-1	Q153	E-3	TP409	G-9
IC201	J-2	Q251	* F-3	TP550	A-5
IC202	* H-8	Q301	E-9	TP601	C-3
IC203	* E-1	Q302	* D-8	TP602	C-4
IC204	H-3	Q303	* D-8	TP603	C-4
IC205	G-3	Q304	D-8	TP604	C-3
IC206	* C-9	Q305	D-8	TP605	C-2
IC207	* F-8	Q306	D-8	TP651	C-3
IC208	* E-7	Q307	* D-8	TP652	C-3
IC209	* F-8	Q308	* D-7	TP653	A-2
IC210	J-2	Q309	* C-7	TP701	C-1
IC211	* E-8	Q310	* D-7	TP702	D-2
IC212	* E-8	Q311	* D-7	TP703	D-2
IC213	J-9	Q312	* D-7	TP704	D-1
IC214	* B-4	Q313	* D-7	TP705	D-1
IC215	* D-8	Q314	* D-7	TP706	D-1
IC216	* H-8	Q315	* D-7	TP707	D-1
IC217	* E-7	Q316	* D-6	TP708	D-1
IC218	* B-7	Q317	* D-6	TP709	D-1
IC251	* H-3	Q351	* C-7	TP710	D-1
IC252	F-3	Q352	* C-7	TP711	D-1
IC301	E-9	Q353	* C-7	TP712	D-1
IC351	* C-8	Q401	H-9	TP713	D-1
IC352	C-8	Q402	* G-9	TP751	D-6
IC353	* D-8	Q403	* G-9	TP752	E-7
IC401	H-9	Q404	* G-9	TP753	F-6
IC402	* G-8	Q405	* G-9	TP754	D-7
IC403	* H-9	Q406	* G-9	TP755	D-6
IC404	* G-8	Q407	* G-9	TP801	C-5
IC405	G-8	Q408	G-8	TP802	C-5
IC406	* H-8	Q409	* G-8	TP851	E-4
IC451	F-9	Q410	* G-8	TP852	E-3
IC501	B-8	Q411	F-8	TP951	J-8
IC502	B-7	Q412	G-8		
IC503	B-8	Q413	* G-8		
IC504	* B-9	Q414	* H-9		
IC505	B-7	Q415	* H-8		
IC506	B-8	Q416	* H-8		
IC507	B-8	Q417	* H-8		
IC550	B-5	Q418	* H-8		
IC551	C-6	Q419	* H-8		
IC552	* A-5	Q420	G-7		
IC601	B-9	Q421	* G-8		
IC651	B-3	Q422	F-7		
IC652	C-2	Q423	F-8		
IC653	* C-2	Q501	* B-6		
IC654	* A-3	Q701	* D-2		
IC655	* B-2	Q702	* E-2		
IC656	* B-2	Q703	* D-2		
IC657	* C-2	Q751	* E-7		
IC659	B-2	Q752	* D-7		
IC660	* B-3	Q801	* D-5		
IC701	* D-3	Q802	* C-5		
IC702	D-3	Q851	* E-4		
IC703	* D-4	Q852	* E-4		
IC704	D-3	Q901	A-2		
IC705	* C-2	Q902	A-2		
IC706	* D-2	Q933	H-8		
IC708	E-2	Q934	* J-8		
IC709	D-2	Q935	* H-8		
IC710	D-2				
IC711	D-1	TP101	G-3		

C C

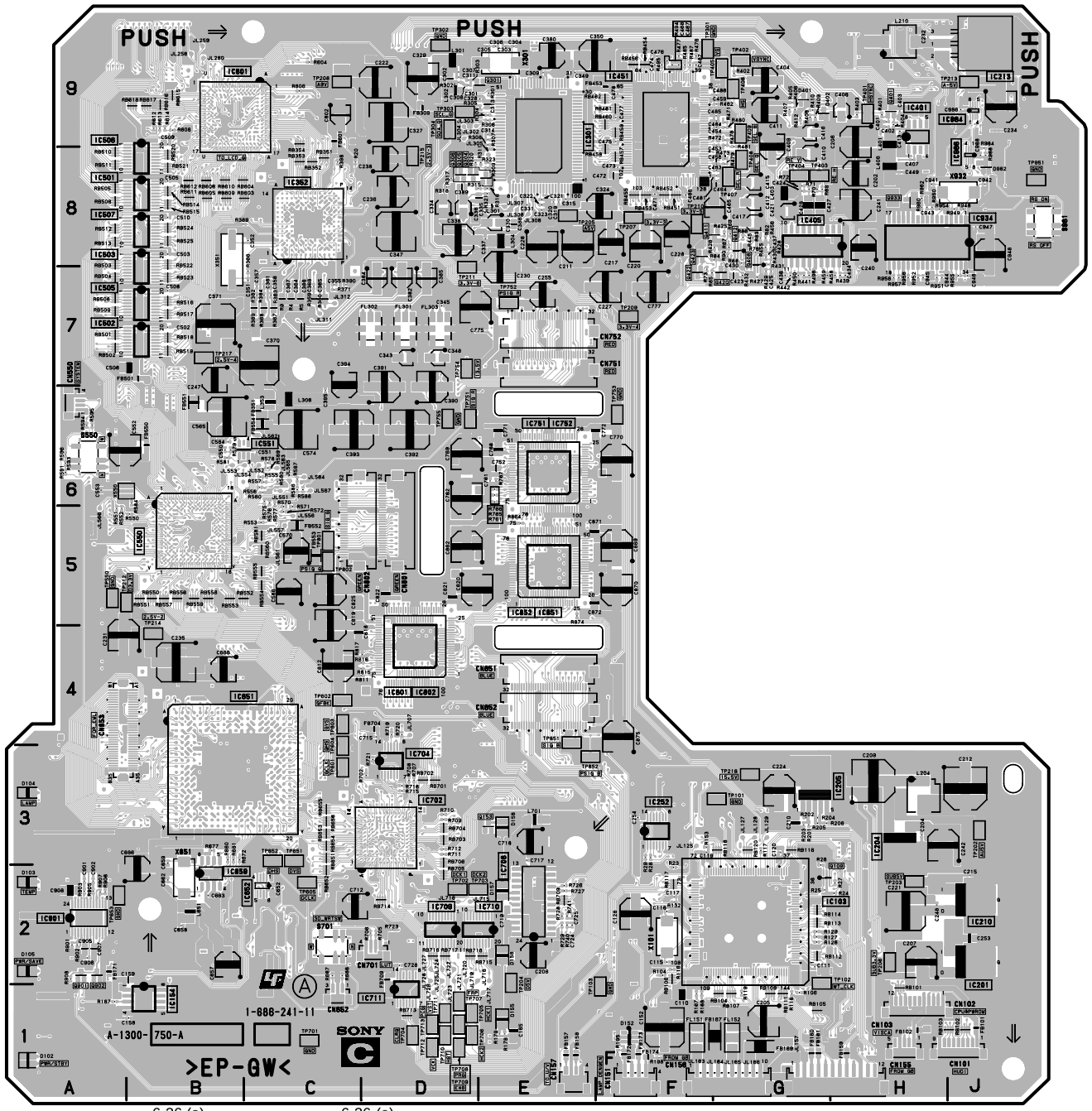

C -A SIDE-

SUFFIX: -11

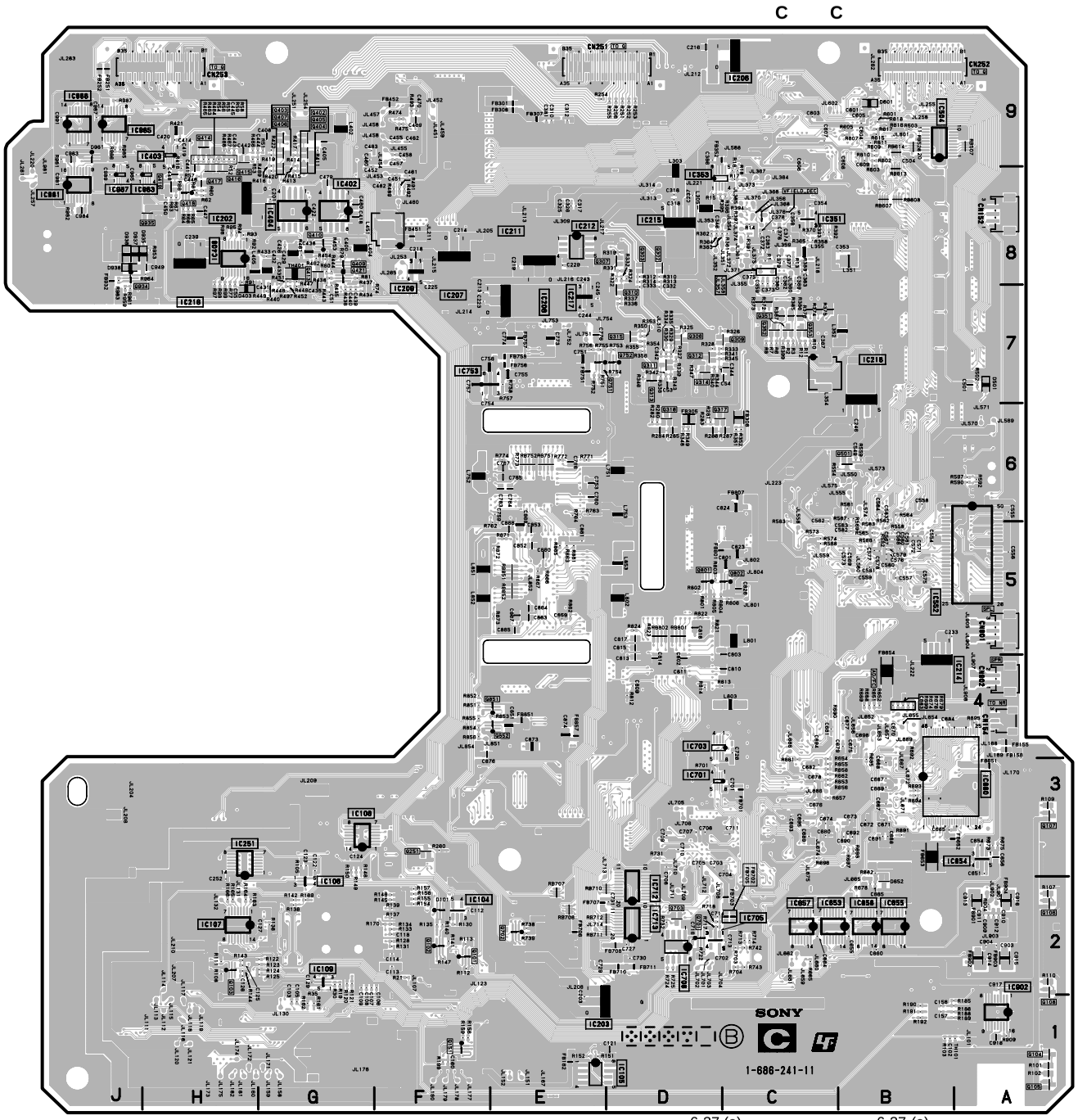

C -B SIDE-
SUFFIX: -11

GA BOARD

*:B SIDE

D401	* D-1
D402	* D-1
D403	C-1
D404	* D-2
D405	B-5
D406	C-5
D407	* C-5
D408	* C-5
D409	* C-3
D410	* D-3
D411	* C-5
IC401	* C-4
Q401	D-1
Q402	C-2
Q403	D-3
Q404	D-3
Q405	C-4
Q406	C-4
Q407	D-5

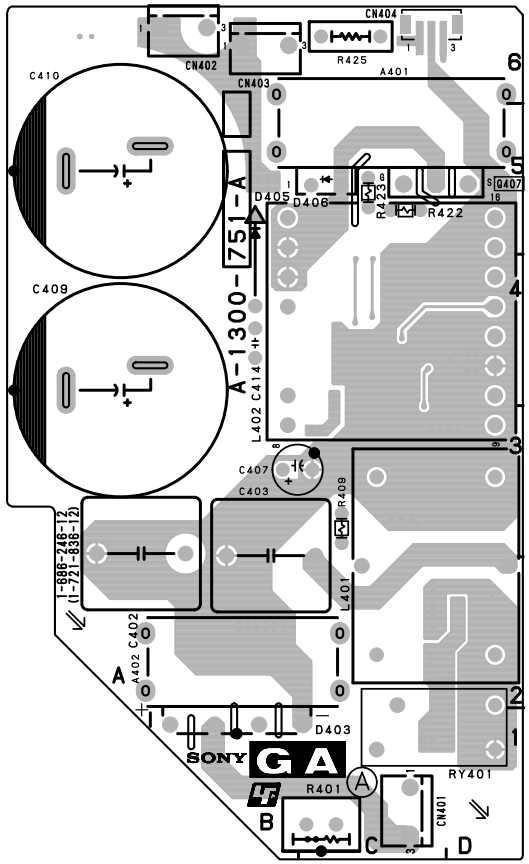

GA -A SIDE-
SUFFIX: -12

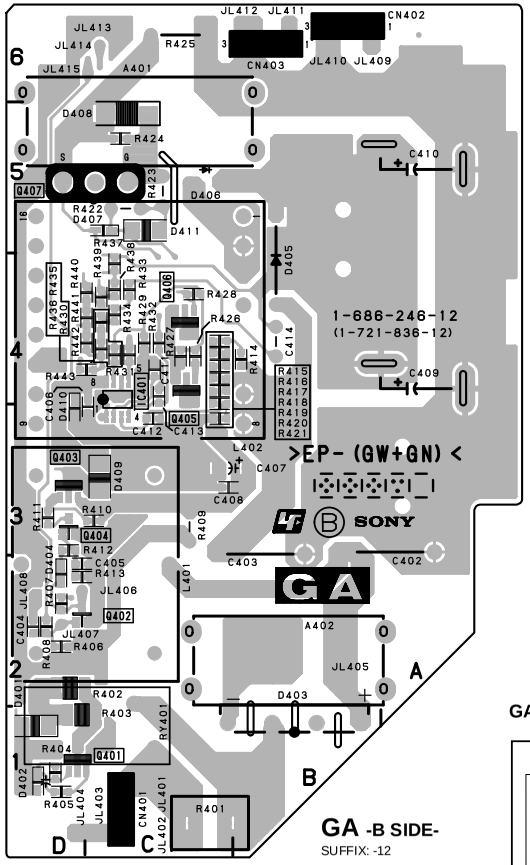

GA -B SIDE-
SUFFIX: -12

GA MC33262DR2 (IC401)

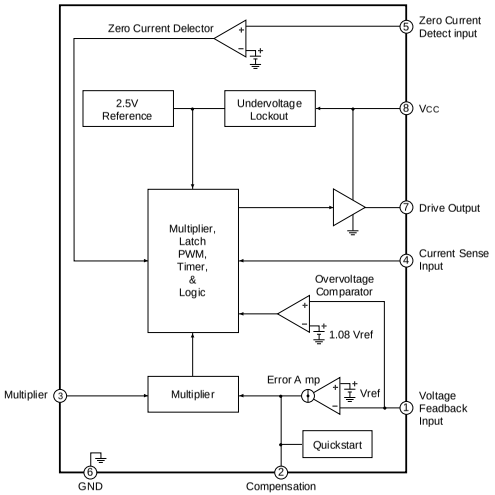

GA BOARD

*:B SIDE

D401	* D-1
D402	* D-1
D403	C-1
D404	* D-2
D405	B-5
D406	C-5
D407	* C-5
D408	* C-5
D409	* C-3
D410	* D-3
D411	* C-5
IC401	* C-4
Q401	* D-1
Q402	* D-2
Q403	* D-3
Q404	* D-3
Q405	* C-4
Q406	* C-4
Q407	D-5

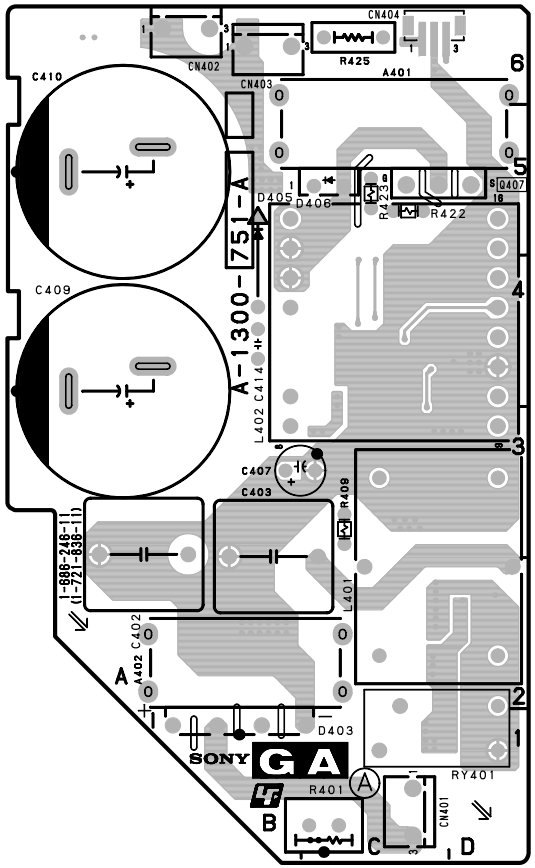

GA -A SIDE-
SUFFIX: -11

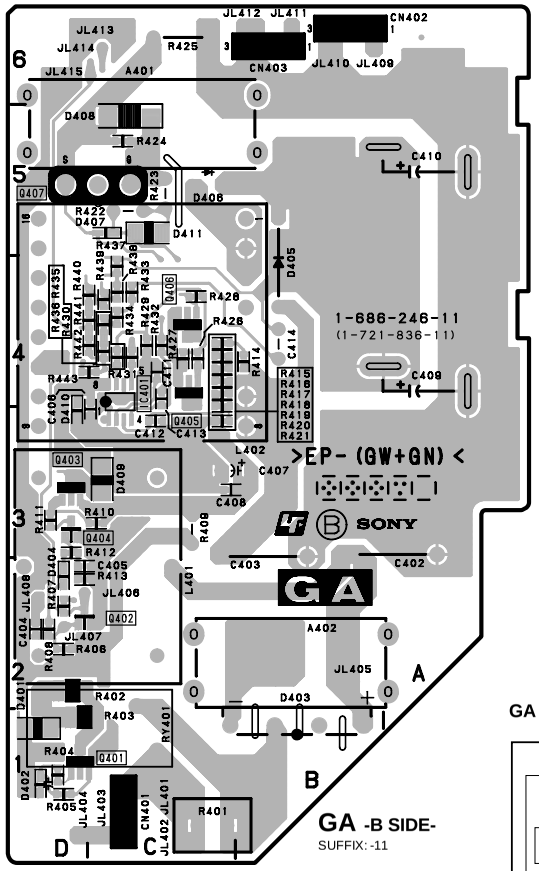

GA -B SIDE-
SUFFIX: -11

GA MC33262DR2 (IC401)

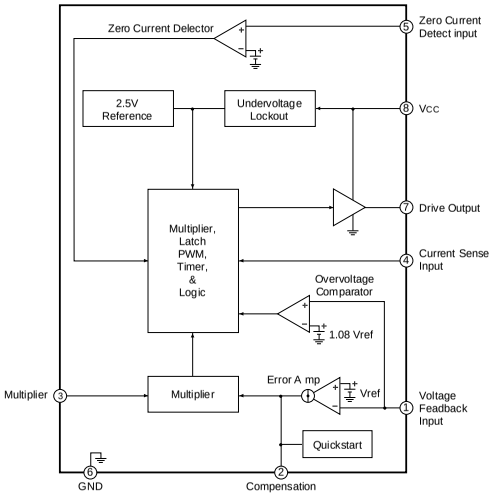

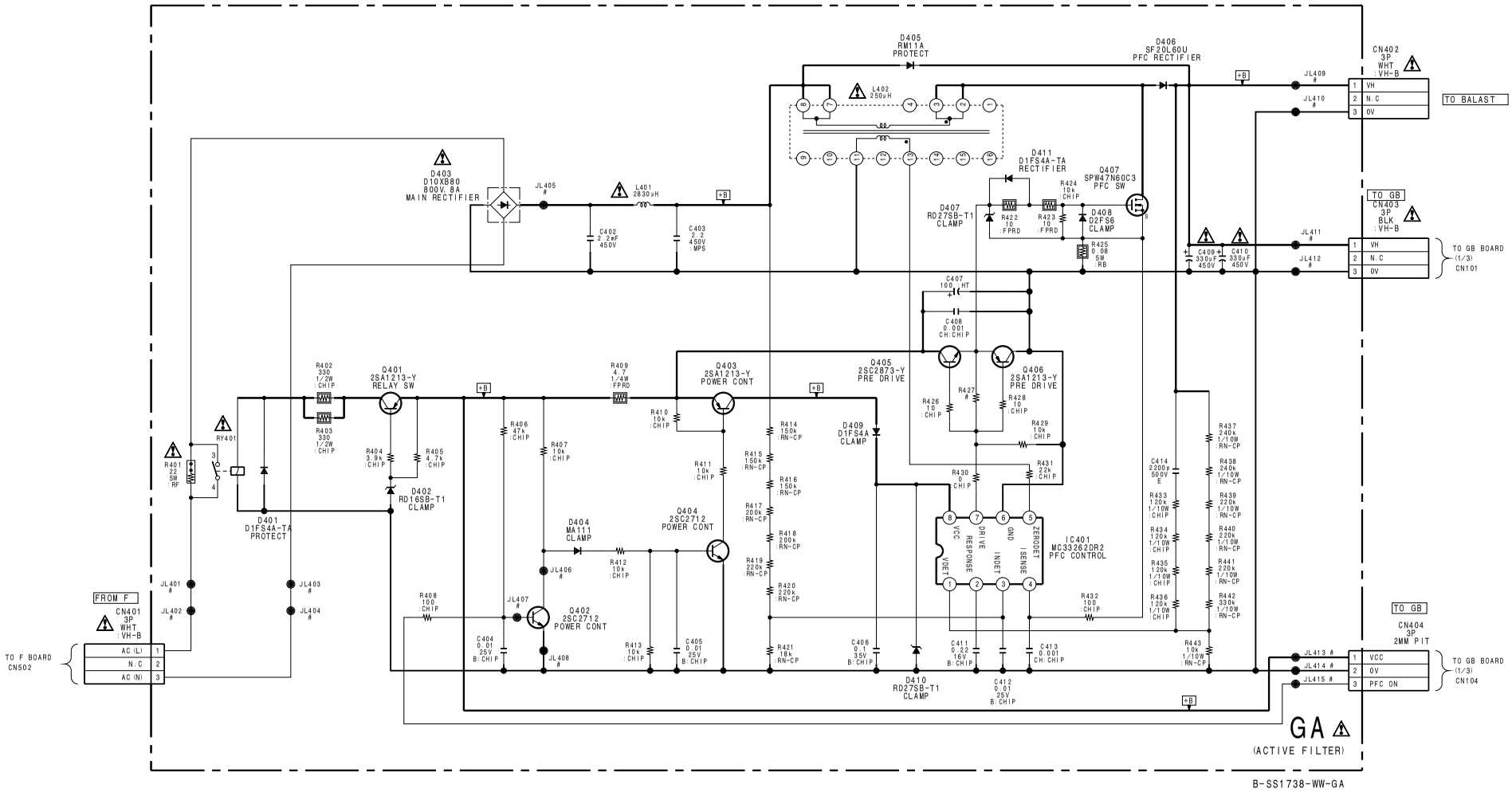
D405
RM11A
PROTECT
D406
SF20L60U
PFC RECTIFIER
CN402
3P
WHT
:VH-B
TO BALAST
L402
250μH
D403
D10XB80
800V, 8A
MAIN RECTIFIER
JL405
L401
2830μH
C402
2.2mF
450V
C403
2.2
450V
:MPS
D411
D1FS4A-TA
RECTIFIER
Q407
SPW47N60C3
PFC SW
R424
10k
:CHIP
D407
RD27SB-T1
CLAMP
R422
10
:FPRD
R423
10
:FPRD
D408
D2FS6
CLAMP
R425
0.68
5W
:RB
TO GB
CN403
3P
BLK
:VH-B
TO GB BOARD
(1/3)
CN101
C409
330μF
450V
C410
330μF
450V
C407
100
C408
0.001
CH:CHIP
R402
330
1/2W
:CHIP
R403
330
1/2W
:CHIP
Q401
2SA1213-Y
RELAY SW
R409
4.7
1/4W
:FPRD
Q403
2SA1213-Y
POWER CONT
Q405
2SC2873-Y
PRE DRIVE
Q406
2SA1213-Y
PRE DRIVE
R426
10
:CHIP
R427
R428
10
:CHIP
R429
10k
:CHIP
RY401
R401
22
5W
:RF
R404
3.9k
:CHIP
R405
4.7k
:CHIP
D402
RD16SB-T1
CLAMP
R406
47k
:CHIP
R407
10k
:CHIP
R410
10k
:CHIP
R411
10k
:CHIP
R414
150k
:RN-CP
R415
150k
:RN-CP
R416
150k
:RN-CP
R417
200k
:RN-CP
R418
200k
:RN-CP
R419
220k
:RN-CP
R420
220k
:RN-CP
D409
D1FS4A
CLAMP
R430
0
:CHIP
R431
22k
:CHIP
IC401
MC33262DR2
PFC CONTROL
VDET
VCC
RESPONSE
DRIVE
GND
INDET
ISENSE
ZERODET
R432
100
:CHIP
C414
2200p
500V
E
R433
120k
1/10W
:CHIP
R434
120k
1/10W
:CHIP
R435
120k
1/10W
:CHIP
R436
120k
1/10W
:CHIP
R437
240k
1/10W
:RN-CP
R438
240k
1/10W
:RN-CP
R439
220k
1/10W
:RN-CP
R440
220k
1/10W
:RN-CP
R441
220k
1/10W
:RN-CP
R442
330k
1/10W
:RN-CP
R443
10k
1/10W
:RN-CP
D401
D1FS4A-TA
PROTECT
D404
MA111
CLAMP
R412
10k
:CHIP
Q404
2SC2712
POWER CONT
Q402
2SC2712
POWER CONT
R408
100
:CHIP
C404
0.01
25V
B:CHIP
R413
10k
:CHIP
C405
0.01
25V
B:CHIP
C406
0.1
35V
B:CHIP
D410
RD27SB-T1
CLAMP
C411
0.22
16V
B:CHIP
C412
0.01
25V
B:CHIP
C413
0.001
CH:CHIP
FROM F
CN401
3P
WHT
:VH-B
TO F BOARD
CN502
AC (L)
N.C
AC (N)
TO GB
CN404
3P
2MM PIT
VCC
0V
PFC ON
TO GB BOARD
(1/3)
CN104
GA
(ACTIVE FILTER)
B-SS1738-WW-GA

GB BOARD

*:B SIDE

D101	*B-3
D102	B-3
D103	*A-2
D104	*E-4
D105	*D-3
D106	B-3
D107	B-4
D108	*A-4
D109	E-3
D110	*B-4
D111	*B-4
D112	*E-3
D113	A-3
D114	*E-4
D115	*E-4
D116	*D-4
D117	*C-4
D204	B-2
D205	*B-2
D206	*B-2
D207	*B-2
D301	*C-2
D302	*C-1
D303	*E-2
D304	*F-2
D305	*E-1
D306	*E-1
D307	*E-2
D308	*C-1
D309	*D-1
D310	E-1
D311	*D-1
D312	*E-1
D313	*E-1
D314	D-1
D315	*D-2
D316	*E-2
D317	*D-1
D318	D-1
D319	D-1
IC101	A-3
IC102	E-3
IC103	*C-4
IC104	C-4
IC201	*B-1
IC204	C-2
IC301	C-2
IC302	B-1
IC303	E-1
IC304	*C-1
IC305	D-1
IC306	*E-2
IC307	C-1
PH101	D-4
PH102	D-4
Q101	F-3
Q102	E-3
Q103	D-4
Q104	D-4
Q105	A-3
Q106	A-4
Q107	D-4
Q108	B-3
Q109	A-2
Q110	A-4
Q205	B-1
Q207	C-2
Q208	B-2
Q301	B-1
Q302	D-2
Q303	F-2

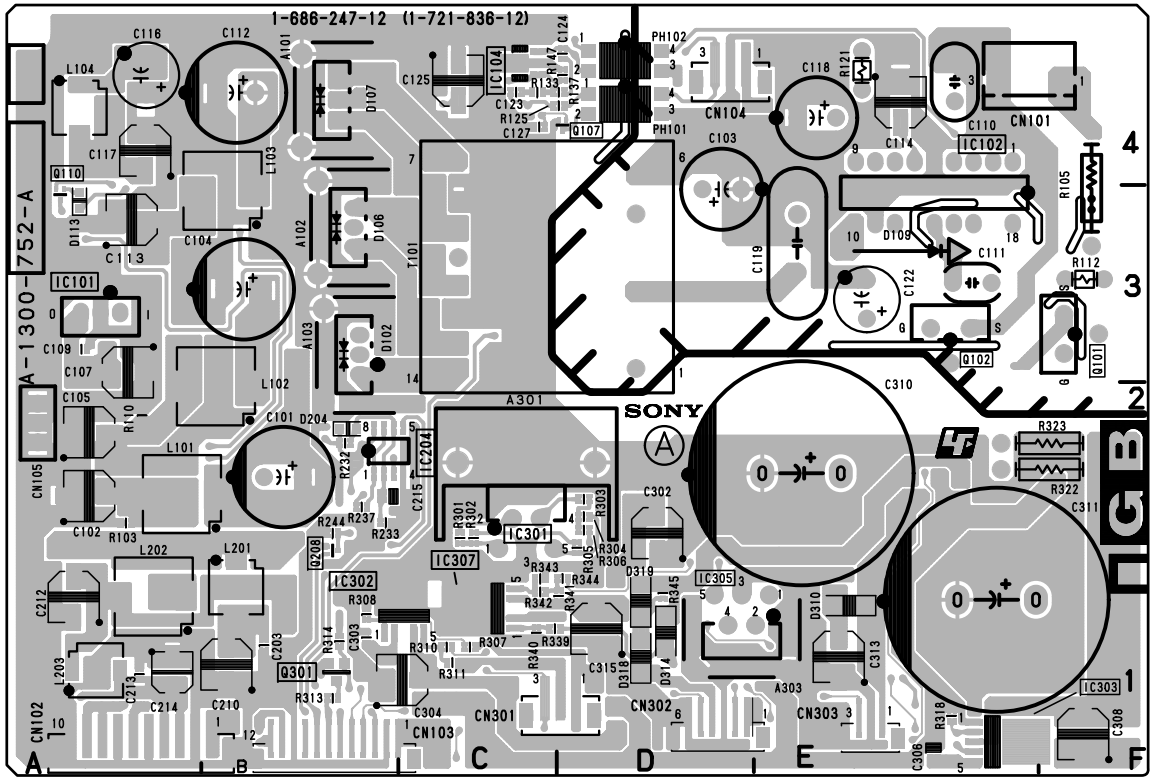

GB -A SIDE-

SUFFIX: -12

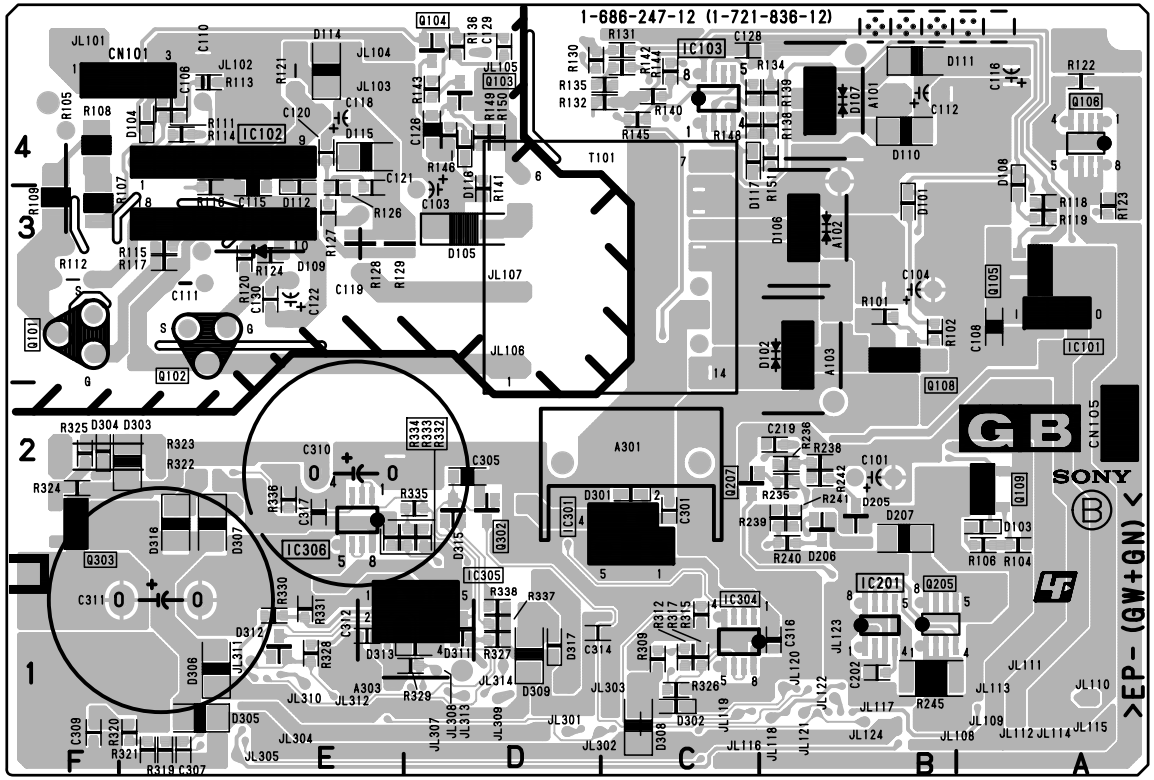

GB -B SIDE-
SUFFIX: -12

GB BOARD

*:B SIDE

D101	*B-3
D102	B-3
D103	*A-2
D104	*E-4
D105	*D-3
D106	B-3
D107	B-4
D108	*A-4
D109	E-3
D110	*B-4
D111	*B-4
D112	*E-3
D113	A-3
D114	*E-4
D115	*E-4
D116	*D-4
D204	B-2
D205	*B-2
D206	*B-2
D207	*B-2
D301	*C-2
D302	*C-1
D303	*E-2
D304	*F-2
D305	*E-1
D306	*E-1
D307	*E-2
D308	*C-1
D309	*D-1
D310	E-1
D311	*D-1
D312	*E-1
D313	*E-1
D314	D-1
D315	*D-2
D316	*E-2
D317	*D-1
D318	D-1
D319	D-1
IC101	A-3
IC102	E-3
IC103	*C-4
IC104	C-4
IC201	*B-1
IC204	B-2
IC301	C-2
IC302	B-1
IC303	E-1
IC304	*C-1
IC305	D-1
IC306	*E-2
IC307	C-1
Q101	F-3
Q102	E-3
Q103	*D-4
Q104	*D-4
Q105	*A-3
Q106	*A-4
Q107	D-4
Q108	*B-3
Q109	*A-2
Q110	A-4
Q205	*B-1
Q207	*C-2
Q208	B-2
Q301	B-1
Q302	*D-2
Q303	*F-2

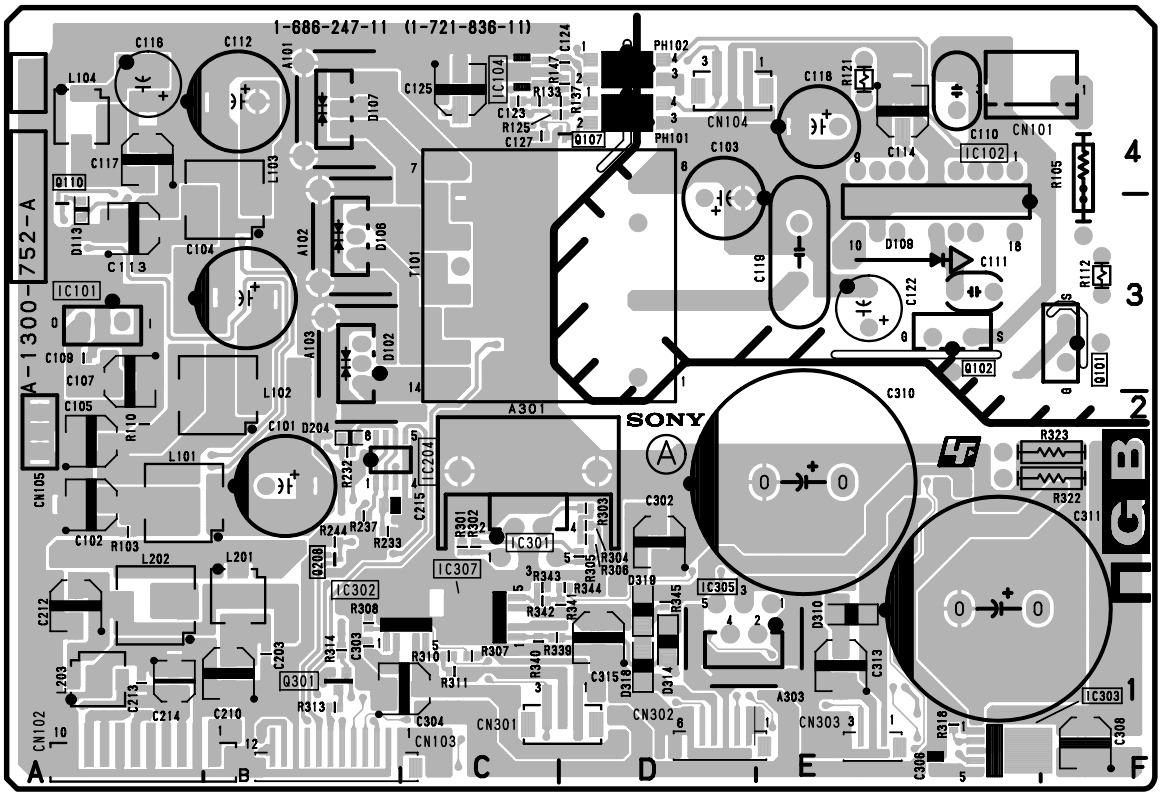

GB -A SIDE-

SUFFIX: -11

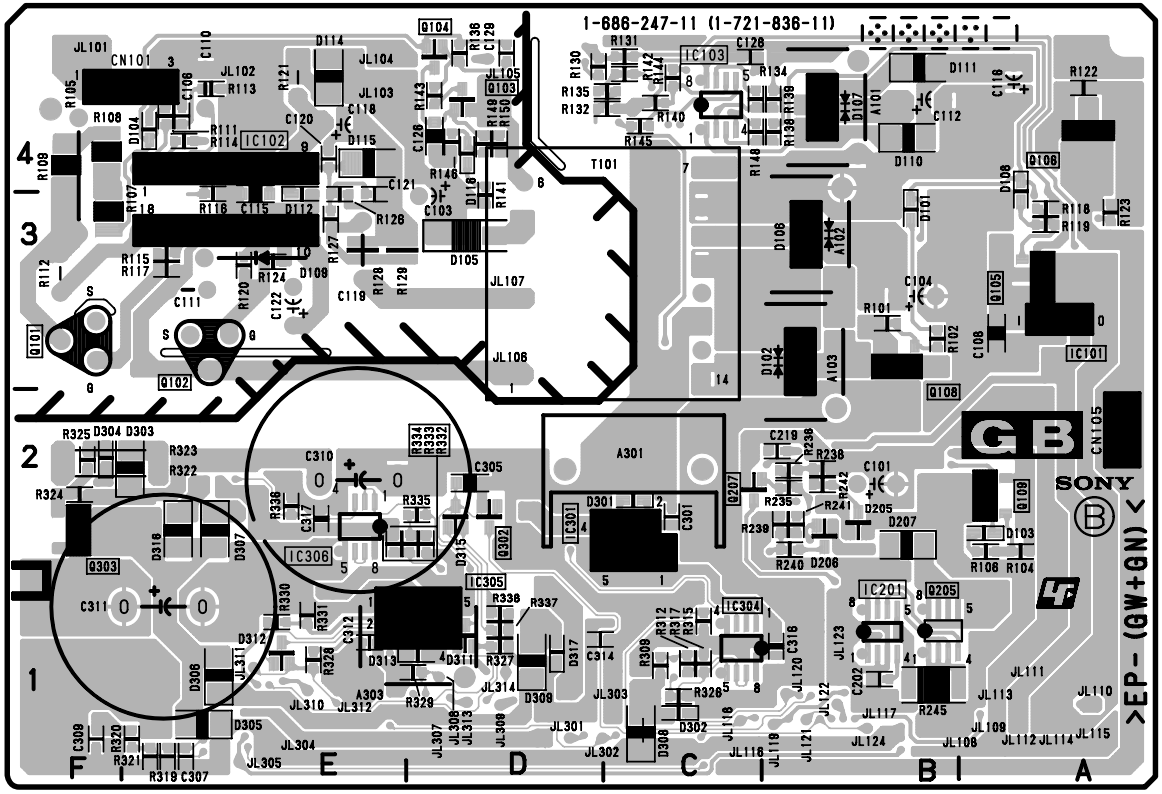

GB -B SIDE-
SUFFIX: -11

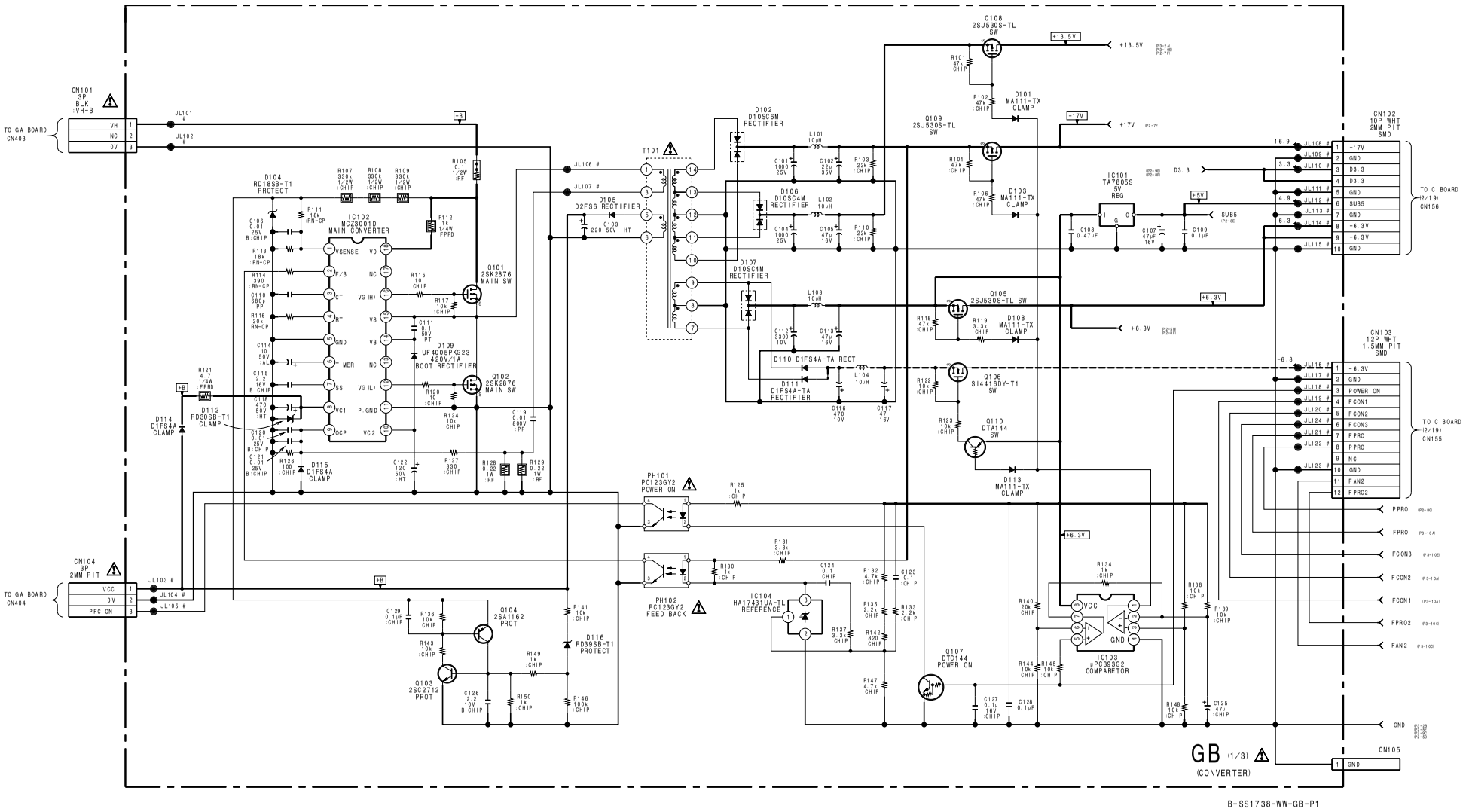
CN101
3P
BLK
:VH-B
TO GA BOARD
CN403
VH
NC
0V
JL101 #
JL102 #
CN104
3P
2MM PIT
TO GA BOARD
CN404
VCC
0V
PFC ON
JL103 #
JL104 #
JL105 #
D104
RD16SB-T1
PROTECT
IC102
MCZ3001D
MAIN CONVERTER
VSENSE
F/B
CT
RT
GND
TIMER
SS
VC1
OCP
VD
NC
VG (H)
VS
VB
NC
VG (L)
P.GND
VC2
Q101
2SK2876
MAIN SW
Q102
2SK2876
MAIN SW
D109
UF4005PKG23
420V/1A
BOOT RECTIFIER
D112
RD30SB-T1
CLAMP
D114
D1FS4A
CLAMP
D115
D1FS4A
CLAMP
D116
RD39SB-T1
PROTECT
Q104
2SA1162
PROT
Q103
2SC2712
PROT
T101
D105
D2FS6 RECTIFIER
D102
D10SC6M
RECTIFIER
D106
D10SC4M
RECTIFIER
D107
D10SC4M
RECTIFIER
D110 D1FS4A-TA RECT
D111
D1FS4A-TA
RECTIFIER
PH101
PC123GY2
POWER ON
PH102
PC123GY2
FEED BACK
IC104
HA17431UA-TL
REFERENCE
Q108
2SJ530S-TL
SW
Q109
2SJ530S-TL
SW
Q105
2SJ530S-TL SW
Q106
SI4416DY-T1
SW
Q110
DTA144
SW
Q107
DTC144
POWER ON
D101
MA111-TX
CLAMP
D103
MA111-TX
CLAMP
D108
MA111-TX
CLAMP
D113
MA111-TX
CLAMP
IC101
TA7805S
5V
REG
IC103
μPC393G2
COMPARETOR
VCC
GND
CN102
10P WHT
2MM PIT
SMD
TO C BOARD
(2/19)
CN156
+17V
GND
D3.3
D3.3
SUB5
GND
+6.3V
+6.3V
GND
CN103
12P WHT
1.5MM PIT
SMD
TO C BOARD
(2/19)
CN155
-6.3V
GND
POWER ON
FCON1
FCON2
FCON3
FPRO
PPRO
NC
GND
FAN2
FPRO2
PPRO
FPRO
FCON3
FCON2
FCON1
FPRO2
FAN2
GND
CN105
GND
GB (1/3)
(CONVERTER)
B-SS1738-WW-GB-P1

 GB (2/3)

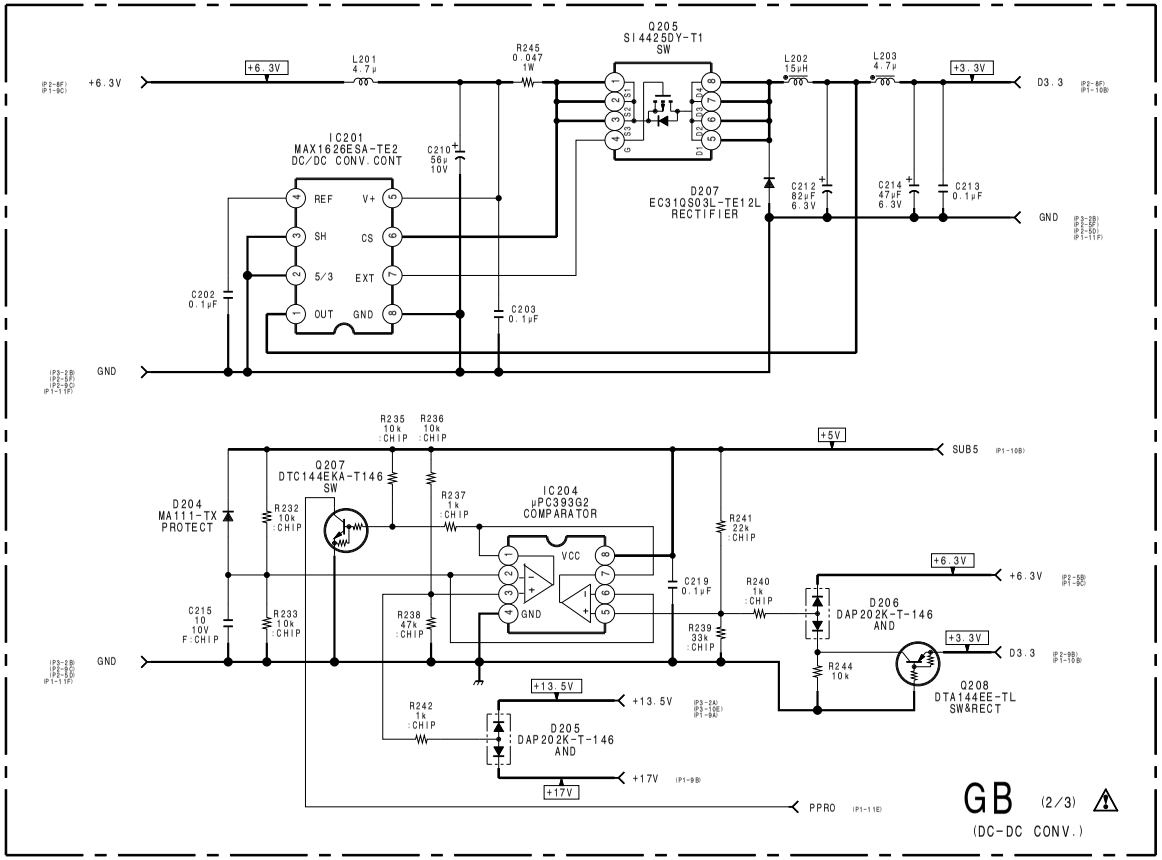

B-SS1738-WW-GB-P2

 6-43

GB (3/3)

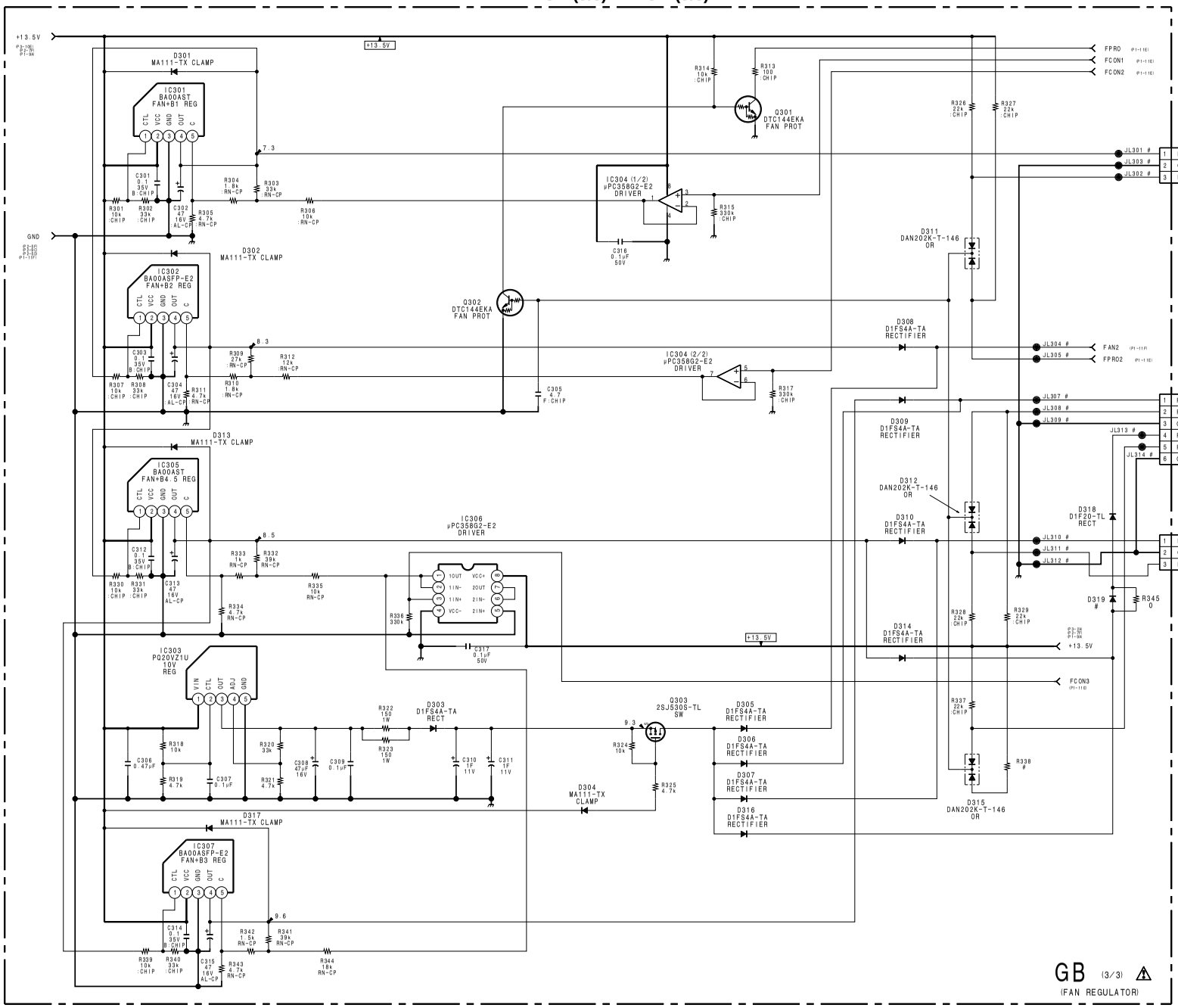
+13.5V
GND
D301
MA111-TX CLAMP
IC301
BA00AST
FAN+B1 REG
D302
MA111-TX CLAMP
IC302
BA00ASFP-E2
FAN+B2 REG
D313
MA111-TX CLAMP
IC305
BA00AST
FAN+B4.5 REG
IC303
PQ20VZ1U
10V
REG
D317
MA111-TX CLAMP
IC307
BA00ASFP-E2
FAN+B3 REG
IC304 (1/2)
μPC358G2-E2
DRIVER
IC304 (2/2)
μPC358G2-E2
DRIVER
IC306
μPC358G2-E2
DRIVER
Q301
DTC144EKA
FAN PROT
Q302
DTC144EKA
FAN PROT
Q303
2SJ530S-TL
SW
D303
D1FS4A-TA
RECT
D304
MA111-TX
CLAMP
D305
D1FS4A-TA
RECTIFIER
D306
D1FS4A-TA
RECTIFIER
D307
D1FS4A-TA
RECTIFIER
D308
D1FS4A-TA
RECTIFIER
D309
D1FS4A-TA
RECTIFIER
D310
D1FS4A-TA
RECTIFIER
D311
DAN202K-T-146
OR
D312
DAN202K-T-146
OR
D314
D1FS4A-TA
RECTIFIER
D315
DAN202K-T-146
OR
D316
D1FS4A-TA
RECTIFIER
D318
D1F20-TL
RECT
D319
#
FPRO
FCON1
FCON2
FCON3
FAN2
FPRO2
CN301
3P WHT
2MM PIT
CN302
6P WHT
1.5MM PIT
SMD
CN303
3P WHT
1.5MM PIT
SMD
FAN1
GND
FPRO1
FAN3
FPRO3
FAN5
FPRO5
FAN4
FPRO4
FAN
GB (3/3)
(FAN REGULATOR)

6-44

GB (3/3) BA00ASFP-E2 (IC302, IC307)
GB (3/3) BA00AST (IC301, IC305)

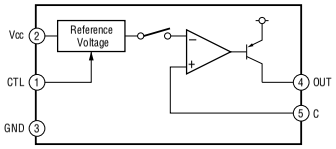

GB (2/3) MAX1626ESA-TE2 (IC201)

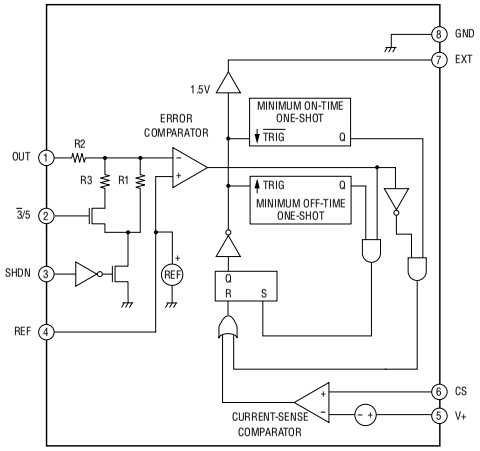

GB (1/3) MCZ3001D (IC102)

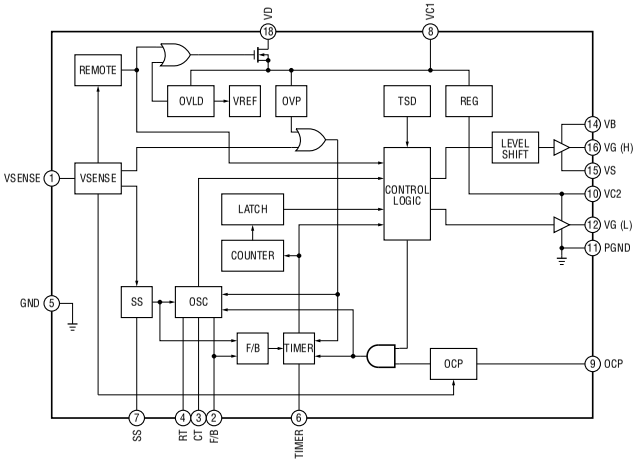

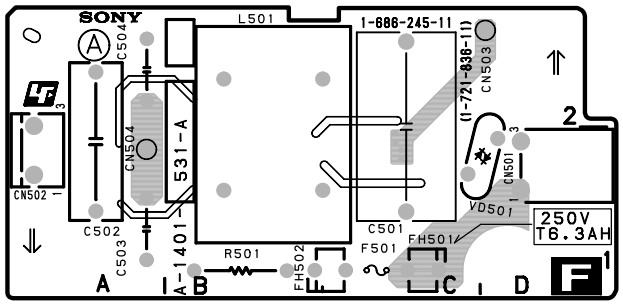

F -A SIDE-
SUFFIX: -11

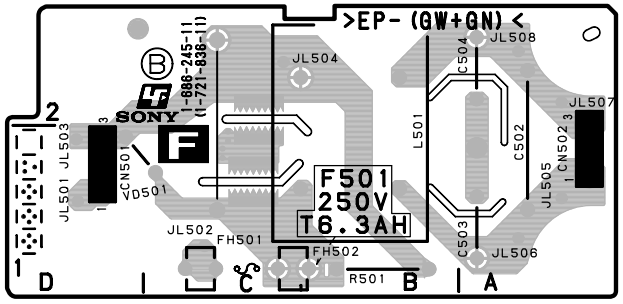

F -B SIDE-
SUFFIX: -11

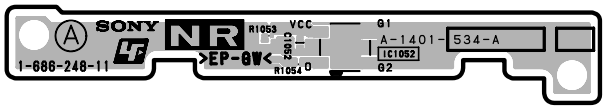

NR -A SIDE-
SUFFIX: -11

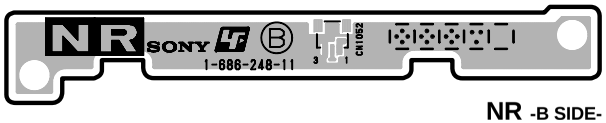

NR -B SIDE-
SUFFIX: -11

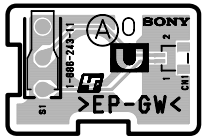

U -A SIDE-
SUFFIX: -11

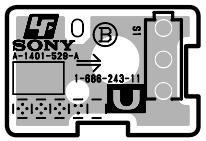

U -B SIDE-
SUFFIX: -11

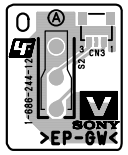

V -A SIDE-
SUFFIX: -12

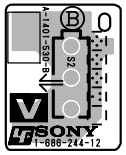

V -B SIDE-
SUFFIX: -12

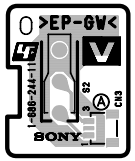

V -A SIDE-
SUFFIX: -11

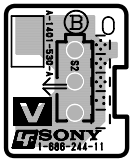

V -B SIDE-
SUFFIX: -11

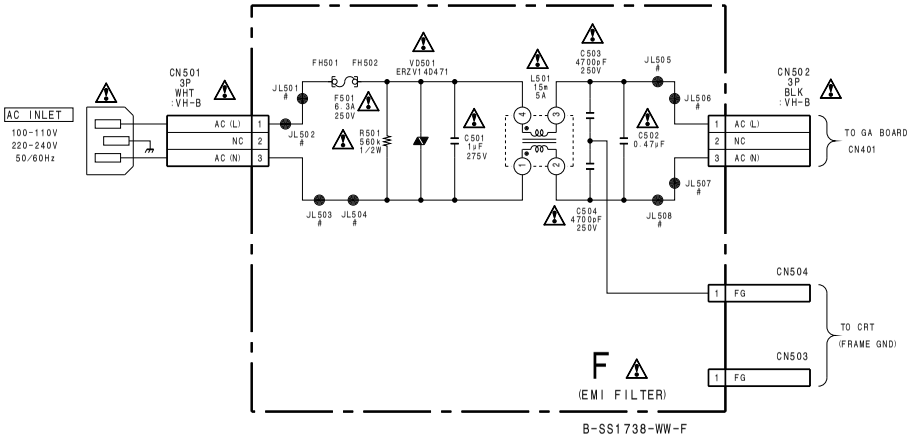
AC INLET
100~110V
220~240V
50/60Hz
CN501
3P
WHT
:VH-B
AC (L) 1
NC 2
AC (N) 3
JL501 #
JL502 #
JL503 #
JL504 #
FH501
FH502
F501
6.3A
250V
R501
560k
1/2W
VD501
ERZV14D471
C501
1μF
275V
L501
15m
5A
C503
4700pF
250V
C504
4700pF
250V
C502
0.47μF
JL505 #
JL506 #
JL507 #
JL508 #
CN502
3P
BLK
:VH-B
1 AC (L)
2 NC
3 AC (N)
TO GA BOARD
CN401
CN504
1 FG
CN503
1 FG
TO CRT
(FRAME GND)
F
(EMI FILTER)
B-SS1738-WW-F

6-47

SAFETY CHECK-OUT

After correcting the original service problem, perform the following safety checks before releasing the set to the customer :

Check the metal trim, “metallized” knobs, screws, and all other exposed metal parts for AC leakage. Check leakage as described below.

LEAKAGE TEST

The AC leakage from any exposed metal part to earth ground and from all exposed metal parts to any exposed metal part having a return to chassis, must not exceed 0.5 mA. Leakage current can be measured by any one of three methods.

1. A commercial leakage tester, such as the Simpson 229 or RCA WT-540A. Follow the manufacturers’ instructions to use these instruments.
2. A battery-operated AC milliammeter. The Data Precision 245 digital multimeter is suitable for this job.
3. Measuring the voltage drop across a resistor by means of a VOM or battery-operated AC voltmeter. The “limit” indication is 0.75 V, so analog meters must have an accurate low-voltage scale. The Simpson 250 and Sanwa SH-63Trd are examples of a passive VOM that is suitable. Nearly all battery operated digital multimeters that have a 2 V AC range are suitable. (See Fig. A)

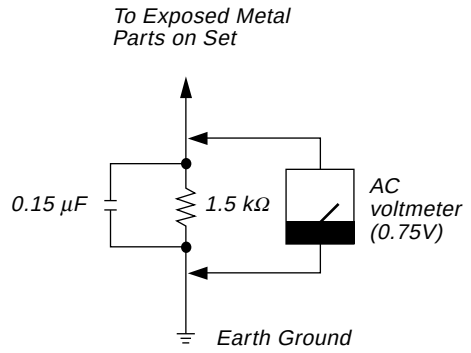

Fig A. Using an AC voltmeter to check AC leakage.

VPL-PX35 (SY)
VPL-PX40 (SY) E
9-870-354-02

Sony Corporation
B&P Company

Printed in Japan
2003. 4 16
©2002