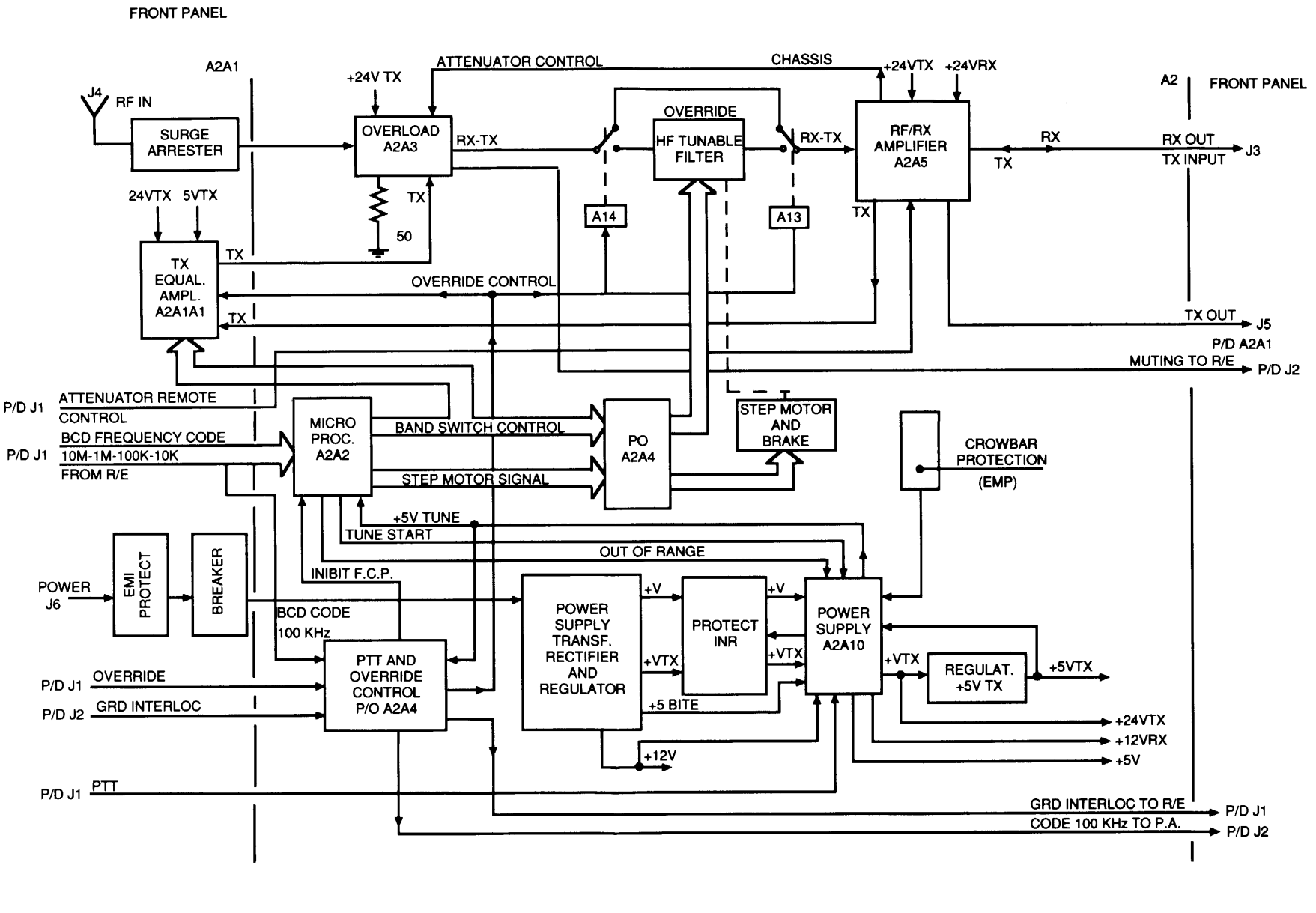

FO-1. Pre-Post Selector Tn-612/G Functional Block Diagram