INSTRUCTION MANUAL

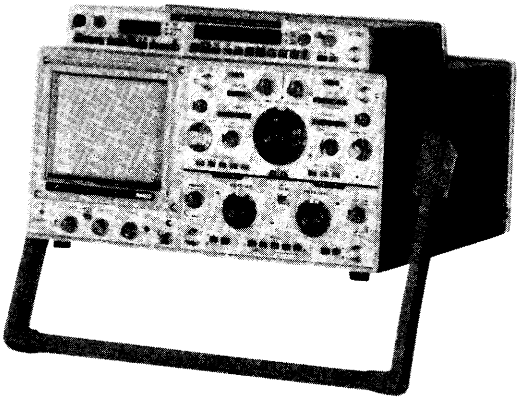

OSCILLOSCOPE

SS-5710D

TABLE OF CONTENTS

SECTION 1 SPECIFICATIONS 1-1
- 1-1 GENERAL 1-1
- 1-2 ELECTRICAL SPECIFICATIONS . 1-1
  - 1-2-1 Cathode-Ray Tube (CRT) 1-1
  - 1-2-2 Vertical Deflection System 1-1
  - 1-2-3 Triggering 1-3
  - 1-2-4 Horizontal Deflection System . . 1-3
  - 1-2-5 X-Y Operation 1-4
  - 1-2-6 Z-Axis System 1-4
  - 1-2-7 Signal Output 1-4
  - 1-2-8 Counter 1-5
  - 1-2-9 Digital Multimeter 1-6
  - 1-2-10 Power Supply 1-8
- 1-3 PHYSICAL CHARACTERISTICS . 1-8
- 1-4 ENVIRONMENTAL CHARACTERISTICS 1-8
- 1-5 ACCESSORIES 1-9

SECTION 2 OPERATING INFORMATION 2-1
- 2-1 OPERATING PRECAUTIONS . . . 2-1
- 2-2 OPERATION OF THE HANDLE . 2-3
- 2-3 CONTROLS AND SWITCHES . . . 2-3
  - 2-3-1 Front Panel 2-4
  - 2-3-2 Rear Panel 2-10
  - 2-3-3 Bottom Cover 2-11
- 2-4 BASIC OPERATION OF OSCILLOSCOPE 2-12
  - 2-4-1 Basic Operation for Signal Observation 2-12
  - 2-4-2 Applying Signals 2-13
  - 2-4-3 Signal Input Coupling Section . . 2-13
  - 2-4-4 Vertical Defection Factor Setting 2-14
  - 2-4-5 Triggering 2-14
  - 2-4-6 Sweep Rate Operation 2-17
- 2-5 APPLIED OPERATION OF OSCILLOSCOPE 2-18
  - 2-5-1 Operation for Dual-Trade Observation 2-18
  - 2-5-2 Operation for Observation of the Sum of Two Signals or Their Difference 2-18
  - 2-5-3 Operation for Quadruple-Trace Observation 2-19
  - 2-5-4 Operation for Enlarging Waveforms on the CRT Screen 2-19
  - 2-5-5 Operation for ALT Sweep 2-21
  - 2-5-6 Operation for Observing Television Composite Video Signal Waveforms 2-21
  - 2-5-7 Operation for Single Sweep . . . 2-22
  - 2-5-8 Operation for Use as an X-Y Scope 2-23
  - 2-5-9 Z Axis System 2-24
- 2-6 OPERATION OF COUNTER 2-25
  - 2-6-1 Operation for Frequency Measurement 2-25
  - 2-6-2 Operation for Period Measurement 2-25
  - 2-6-3 Operation for Time Interval Measurement 2-26
  - 2-6-4 Operation for Delay Time Measurement 2-27
  - 2-6-5 Operation for A EVENT IN DELAY TIME Measurement 2-27
- 2-7 OPERATION OF DIGITAL MULTIMETER 2-28
  - 2-7-1 Operation for AC•DC Voltage Measurement 2-28
  - 2-7-2 Operation for Resistance Measurement 2-28
  - 2-7-3 Operation for DC•AC Current Measurement 2-28

SECTION 3 MEASURING PROCEDURES 3-1
- 3-1 ADJUSTMENTS NECESSARY BEFORE MEASUREMENTS 3-1

TABLE OF CONTENTS (Cont.)

3-1-1 TRACE ROTATION Adjustment 3-1
3-1-2 GAIN Adjustment 3-1
3-1-3 x5 BAL Adnustment 3-1
3-1-4 VARIABLE BAL Adjustment . 3-1
3-1-5 Probe Phase Adjustment 3-1
3-2 MEASUREMENT BY OSCILLOSCOPE 3-2
3-2-1 Voltage Measurement 3-2
3-2-2 Current Measurement 3-3
3-2-3 Time Measurement 3-4
3-2-4 Frequency Measurement 3-5
3-2-5 Phase Difference Measurement 3-5
3-3 MEASUREMENT BY COUNTER . 3-7
3-3-1 Frequency Measurement 3-7
3-3-2 Period Measurement 3-8
3-3-3 Time Interval Measurement . . . 3-10
3-3-4 Delay Time Measurement 3-10
3-3-5 A EVENT IN DELAY TIME Measurement 3-11
3-4 MEASUREMENT BY DIGITAL MULTIMETER 3-13
3-4-1 Preparations Before Measurement 3-13
3-4-2 DC•AC Voltage Measurement . . 3-13
3-4-3 Resistance Measurement 3-13
3-4-4 DC •AC Current Measurement . . 3-13
3-4-5 High Voltage Measurement (high voltage probe) 3-14

SECTION 4 THEORY OF OPERATION 4-1
4-1 GENERAL. 4-1
4-1-1 Pre-amplifiers for Channels 1.2. 3, and 4. 4-1
4-1-2 Delay Cable Driver Circuit. 4-1
4-1-3 Vertical Main Amplifier 4-1
4-1-4 Trigger Signal Amplifier 4-1
4-1-5 TV Trigger Signal Separator Circuit. 4-3
4-1-6 A and B Trigger Circuit. 4-3
4-1-7 A and B Sawtooth Genetator Circuit 4-3
4-1-8 Horizontal Amplifier 4-3
4-1-9 Z-Axis Amplifier. 4-3
4-1-10 CRT Circuit 4-4
4-1-11 Low-Voltage Circuit. 4-4
4-1-12 Calibration Voltage and Current Generator Circuit. 4-4

SECTION 5 MAINTENANCE 5-1
5-1 PREVENTIVE MAINTENANCE 5-1
5-1-1 Cleaning 5-1
5-1-2 If Unused for a Long Time 5-1
5-1-3 Cheking. 5-2
5-1-4 Periodic Adjustments. 5-2
5-2 PARTS REPLACEMENT 5-2
5-2-1 Cover Removal 5-2
5-2-2 Printed Circuit Board Removal. 5-2
5-2-3 Printed Circuit Board Parts Replacement 5-2
5-2-4 Replacing Resistors, Diodes or IC's 5-2
5-2-5 Power Transistor Replacement. 5-3
5-2-6 CRT Replacement 5-3
5-2-7 High-Voltage Power Transformer Replacement 5-3
5-2-8 Replacing Control Knobs and Rotary Switches 5-3

TABLE OF CONTENTS (Cont.)

SECTION 6 CHECK AND ADJUSTMENT 6-1
6-1 GENERAL. 6-1
6-2 PERIOD OF CHECK AND ADJUSTMENT 6-1
6-3 PRECAUTIONS FOR CHECK AND ADJUSTMENT. 6-1
6-4 EQUIPMENT REQUIRED 6-1
6-5 CHECK AND ADJUSTMENT ITEMS 6-4
6-6 PREPATATION 6-6
6-7 POWER SUPPLY AND CRT CHECK AND ADJUSTMENT 6-6
6-7-1 Power Supply DC Level I (Voltage Range) 6-6
6-7-2 Power Supply DC Level II (Ripple Voltage). 6-7
6-7-3 AC Line Voltage Range 6-8
6-7-4 High-Voltage Power Supply. 6-9
6-7-5 Intensity 6-10
6-7-6 Focus 6-11
6-7-7 Pattern Distortion 6-12
6-8 CALIBRATOR OUTPUT 6-14
6-8-1 Output Voltage. 6-14
6-8-2 Repetition Rate 6-15
6-9 VERTICAL DEFLECTION SYSTEM CHECK AND ADJUSTMENT 6-16
6-9-1 x5 Balance. 6-16
6-9-2 Variable Balance 6-16
6-9-3 Deflection Factor I (CH1 • CH2) . . .6-17
6-9-4 CH 2 Polarity Balance and Position Center. 6-19
6-9-5 Attenuator Compensation (CH 1 • CH 2) 6-20
6-9-6 Deflection Factor II (CH 3 • CH 4) . .6-22
6-9-7 Attenuator Compensation (CH 3 • CH 4) 6-23
6-9-8 Square Wave Response I (Sag) 6-24
6-9-9 Square Wave Response II (Overshoot and others) 6-26
6-9-10 Bandwidth 6-28
6-9-11 Linearity 6-29
6-10 TRIGGER SYSTEM CHECK AND ADJUSTMENT 6-30
6-10-1 A Triggering. 6-30
6-10-2 B Triggering 6-31
6-11 HORIZONTAL DEFLECTION SYSTEM CHECK AND ADJUSTMENT 6-32
6-11-1 Sweep Rate 6-32
6-11-2 Magnification Center 6-34
6-11-3 Magnified Sweep Rate 6-35
6-11-4 Sweep Trace Length. 6-36
6-11-5 B Sweep Start. 6-37
6-11-6 Start and Stop of Delay 6-38
6-11-7 Jitter. .6-40
6-12 X-Y OPERATION. 6-42
6-12-1 Deflection Factor and Intensity Level. 6-42
6-12-2 Phase Difference 6-43

Counter
6-13-1 Power Supply DC Level 6-52
6-13-2 Self CHECK 6-53
6-13-3 FREQ Measurement Mode 6-54
6-13-4 Standard Oscillator 6-55
6-13-5 PERIOD Measurement Mode 6-56
6-13-6 TIME INTERVAL Measurement Mode 6-57
6-13-7 DELAY TIME Measurement Mode 6-58
6-13-8 A EVENT IN D TIME Measurement Mode 6-59

TABLE OF CONTENTS (Cont.)

Digital multimeter

6-14-1 Power Supply DC Level 6-71

6-14-2 DC Voltage Measurement 6-73

6-14-3 AC Voltage Measurement 6-74

6-14-4 Resistance Measurement 6-75

6-14-5 DC Current Measurement 6-76

6-14-6 AC Current Measurement 6-77

SECTION 7 SCHEMATIC DIAGRAMS

OSCILLOSCOPE SECTION

CH 1 ATTENUATOR & PRE-AMPLIFIER (1) $\boxed{1}$. . . . 7-2

CH 2 ATTENUATOR & PRE-AMPLIFIER (1) $\boxed{2}$. . . . 7-5

CH 1 PRE-AMPLIFIER (2) $\boxed{3}$. . . . 7-6

CH 2 PRE-AMPLIFIER (2) $\boxed{4}$. . . . 7-9

DELAY CABLE DRIVER $\boxed{5}$. . . .7-10

VERTICAL PANEL SWITCHES $\boxed{6}$. . . .7-13

VERTICAL CONTROL $\boxed{7}$. . . .7-14

VERTICAL OUTPUT AMPLIFIER $\boxed{8}$. . . .7-16

CH 3 & CH 4 PRE-AMPLIFIER & SOURCE $\boxed{9}$. . . .7-18

A TRIGGER AMPLIFIER $\boxed{10}$. . .7-20

B TRIGGER AMPLIFIER $\boxed{11}$. . .7-23

TV SYNC SEPARATOR $\boxed{12}$. . .7-24

A SWEEP GENERATOR $\boxed{13}$. . .7-26

B SWEEP GENERATOR $\boxed{14}$. . .7-28

TIMING SWITCHES $\boxed{15}$. . .7-31

HORIZONTAL SWITCHES $\boxed{16}$. . .7-33

HORIZONTAL CONTROL $\boxed{17}$. . .7-35

HORIZONTAL AMPLIFIER $\boxed{18}$. . .7-36

Z AXIS CIRCUIT $\boxed{19}$. . .7-38

CRT CIRCUIT $\boxed{20}$. . .7-40

POWER SUPPLY & CALIBRATOR $\boxed{21}$. . .7-42

UNIVERSAL COUNTER SECTION

1/100 PRESCALER & INPUT AMPLIFIER $\boxed{1}$. . . .7-45

TIME INTERVAL CONTROL $\boxed{2}$. . . .7-47

CONTROL $\boxed{3}$. . . .7-49

POWER SUPPLY $\boxed{4}$. . . .7-51

UNIVERSAL COUNTER AMPLIFIER $\boxed{5}$. . . .7-53

UNIVERSAL COUNTER DISPPAY A $\boxed{6}$. . . .7-55

DIGITAL MULTIMETER SECTION

DIGITAL MULTIMETER UNIT $\boxed{1}$. . . .7-57

DIGITAL MULTIMETER DISPLAY B $\boxed{2}$. . . .7-59

SECTION 8 ELECTRICAL PARTS LIST. 8-1

CH 1 & CH 2 ATTENUATOR 8-2

CH 1 PRE-AMPLIFIER 8-4

CH 2 PRE-AMPLIFIER 8-6

CH 3 & CH 4 ATTENUATOR & PRE-AMPLIFIER 8-8

VERTICAL MAIN AMPLIFIER. 8-10

VERTICAL CONTROL 8-12

A & B TRIGGER GENERATOR 8-13

A SWEEP GENERATOR 8-16

B SWEEP GENERATOR 8-18

A & B TIMING CIRCUIT 8-20

HORIZONTAL AMPLIFIER. 8-21

HORIZONTAL CONTROL. 8-23

POWER SUPPLY & CALIBRATOR . . .8-24

Z-Axis & CRT CIRCUIT. 8-26

PRINTED CIRCUIT BOARD 8-28

SECTION 9 MECHANICAL PARTS LIST AND ILLUSTRATION 9-1

Section 1

Specifications

1-1 GENERAL

The SS-5710D is an oscilloscope with a frequency bandwidth of DC to 60 MHz that can display 8 traces on 4 channels. The SS-5710D is useful in a wide range of applications for not only production lines and maintenance and service purposes but also for the research and development of a variety of electronic devices. The features of the SS-5710D are as follows:;

- In addition to display of 8 traces on 4 channels, the SS-5710D has an ADD function for measuring the sum of two signals and CH 2 POLAR for measurement of the difference between two signals.
- Both CH 1 and CH 2 have a high deflection factor of 1 mV/div (in the x5 MAG function), which permits accurate measurement of lower voltages.
- The horizontal deflection system has sweep rates up to 5 nS/div (in the x10 MAG function) so that even high-speed phenomena can be measured with accuracy.
  The SS-5710D has delayed sweep, single sweep, ALT sweep, and X-Y operation functions, and a TV synchronizing signal separator circuit so that television and other composite video signal waveforms can be observed.
- Signals are applied directly to the universal counter for period and frequency measurements.
- Inclusion of a digital multimeter enables direct measuring of DC and AC voltage, current, and resistance.

1-2 ELECTRICAL SPECIFICATIONS

1-2-1 Cathode-Ray Tube (CRT)

Shape	Rectangular, 6 inches
Dispaly Area	8 div x10 div (1 div = 10 mm), with internal illuminated graticule of parallax-free type
Phosphor	B31 (Standard)
Accelerating Voltage	Approximately 15 kV

1-2-2 Vertical Deflection System

Modes	CH 1, CH 2, ALT, CHOP, ADD, QUAD (Quadruple) CHOP switching rate: 300 kHz ±40%

Channels 1 and 2

Deflection Factor	5 mV/div to 10 V/div, in 11 calibrated steps in a 1-2-5 sequence Accuracy: ±2% (at 10° C to 35° C) ± 5% (at −10° C to 50° C) 5 mV/div to 25 V/div, continuously variable with the VARIABLE control x5 MAG: 1 mV/div to 2 V/div in 11 calibrated steps Accuracy: ±4% (at 10° C to 35° C) ±8% (at −10° C to +50° C)

Frequency Response	DC to 60 MHz, –3 dB (5 mV/div to 0.2 V/div) DC to 20 MHz, –3 dB (1 mV/div, 2 mV/div in the x 5 MAG made Notes • 10° C to 35° C • AC coupling: The lowest useable frequency is 4 Hz.
Rise Time	5.8 nsec (5 mV/div) or less
Pulse Response	Overshoot: 5% or less Sag (at 1 kHz):1.5% or less Other distortions: 5% or less (5 mV/div, 10° C to 35° C)
Signal Delay	Delay cable supplied
Input Coupling	AC, DC, GND
Input RC	Direct: 1 MΩ ±2%//32pF ±3pF With probe: 10 MΩ ±2%//15pF ± 2pF
Maximum Input Voltage	Direct: 400 V (DC + peak AC) With probe: 600 V (DC +peak AC) (Refer to the instruction manual for the probe for the maximum input voltage where probe is used.)
Drift	0.5 div/hour (5 mV/div) or 2 div/hour (1 mV/div) 30 minutes after power is turned on (Standard)
Common Mode Rejection Ratio	5 mV/div 40 : 1 (1 kHz sine wave) 15 : 1 (5 MHz sine wave)
Polarity Inversion	CH 2 only

Channels 3 and 4

Deflection Factor	0.1 V/div, 1 V/div, selectable Accuracy: ± 4% (at 10 °C to 35 °C)
Frequency Response	DC to 50 MHz, –3 dB Notes • 10 °C to 35 °C • AC coupling: The lowest usable frequency is 4 Hz.
Pulse Response	Overshoot: 10% Sag (at 1 kHz): 2% Other Distortions: 10%
Input Coupling	AC, DC
Input RC	Direct: 1 MΩ ± 3%//32 pF ± 3 pF With probe: 10 M Ω±2%//15 pF ±2 pF
Maximum Input Voltage	Direct: 250 V (DC +peak AC) With probe: 600V (DC +peak AC)

1-2-3 Triggering

A-Triggering

Triggering Mode	AUTO, NORM, SINGLE/RESET
Signal Source	CH 1, CH 2, CH 3, LINE, NORM (External trigger can be used by selecting CH 3 with SOURCE switch.)
Coupling	AC, DC, HF REJ, LF REJ, FIX, TV-H, TV-V
Slope	Possitive-going (+), Negative-going (—)
Minimum Trigger Sensitivity	As shown in Table 1-1

Table 1-1 (at 10°C to 35°C)

Frequency Range	Sensitivity	
	CH 1, CH 2	CH 3, CH 4
DC to 1 kHz	1 div	1.5 div
1 kHz to 2 MHz	0.5 div.	1 div
2 MHz to 20 MHz	1 div	1.5 div
20 MHz to 60 MHz	1.5 div	2 div

Note

- Fix: 1 div at 10 Hz to 2 MHz
  2 div at 2 MHz to 30 MHz
  Sine wave only
- TV-V, TV-H synchronizing signal level: 2.3 div or more on screen amplitude for a composite video signal composed of 7 parts video signal and 3 parts synchronizing signal
- Trigger signals are attenuated in the following frequency ranges depending on coupling
  AC: 10 Hz or less
  HF REJ: 10 kHz or higher
  LF REJ: 10 kHz or lower
- AUTO sweep mode: The lowest useable frequency is 50 Hz.

B-Triggering

Signal Sources	RUNS AFTER DELAY, CH 1, CH 2, CH 4 (External trigger can be used by selecting CH 4 with SOURCE switch.)
Coupling	AC, DC, HF REJ, TV-H
Slope	Positive-going (+), negative-going (—)
Minimum Trigger Sensitivity	As showm in Table 1-1 However, Sensitivity of 20 MHz to 60 MHz is 2 div at CH 1, CH 2.

1-2-4 Horizontal Deflection System

Modes	A, A INTEN, ALT, B (DLT'D), X-Y

A-Sweep

Sweep Rates	50 nsec/div to 0.5 sec/div, in 22 calibrated steps in a 1-2-5 sequence 50 nsec/div to 1.25 sec/div, continuously variable with the VARIABLE control Accuracy I (Over center 8 divisions): ±3% at 50 nsec/div to 5 msec/div ±4% at 10 msec/div to 0.5 sec/div (at 10 °C to 35 °C) ± 5% (at —10 °C to +50°C) Accuracy II (Over any 2 of the center 8 divisions): ± 5% (at —10° C to +50°C)
Hold-Off Time	Variable with the HOLDOFF control

B-Sweep

Delay	Continuous delay (RUNS AFTER DELAY), triggered delay
Sweep Rates	50 nsec/div to 50 msec/div, in 19 calibrated steps in a 1-2-5 sequence Accuracy I (Over center 8 divisions): ±3% (at 10 ° C to 35° C) ±5% (at –10° C to +50 °C) Accuracy II (Over 2 of the center 8 divisions): ±5% (at –10° C to +50° C)
Time Difference Measurement	0.5 μsec/div to 5 sec/div Accuracy: ±2% of reading ±0.01 graduation (Minimum graduation of DELAY TIME MULT dial)
Delay Jitter	1/20,000 or less
Sweep Magnification	10 times (Maximum sweep rate: 5 nsec/div) Accuracy I of magnified sweep rate (Over center 8 divisions) ±5% at 50 nsec/div to 0.1 μ sec/div ±4% of 0.2 μsec/div to 0.5 sec/div (at 10° C to 35 ° C) Accuracy II of magnified sweep rate (Over any 2 of the center 8 divisions): ±10% at 50 nsec/div to 0.1 μsec/div ±6% at 0.2 μ sec/div to 0.5 sec/div (at 10° C to 35° C) (Except 25 nsec before and after sweep)

1-2-5 X-Y Operation

X Axis	(Same as CH 1 except for the following)
Deflection Factor	Same as that of CH 1 Accuracy: ±5% (at 10°C to 35°C) ±6% (at –10° C to +50 °C)
Frequency Response	DC to 2 MHz, –3 dB
Y Axis	same as CH 2
X-Y Phase Difference	3 ° or less (at DC to 50 kHz)

1-2-6 Z-Axis System

Sensitivity	0.5 Vp-p
Polarity	Positive decleases intensity, negative incleases intensity
Frequency Range	DC to 3 MHz
Input Resistance	5 k Ω±10%
Maximum Input Voltage	50 V (DC +peak AC)

1-2-7 Calibrator

Waveform	Square wave
Repetition Frequency	1 kHz Accuracy: ±30% (at 10 °C to 35 °C)
Duty Ratio	40% to 60%
Output Voltage	0.3 V Accuracy: ±1% (at 10°C to 35°C) ±2% (at –10 °C to +50 °C)
Output Current	10 mA Accuracy: ±2% (at 10° C to 35° C) ±3% (at –10° C to 50 °C)

1-2-8 Counter

Frequency measurement	Measures A trigger signal
Range	LF mode: 0.1 Hz to 10 MHz HF mode: 1 MHz to 100 MHz (with 1/1000 prescaler)
Count time	0.01 sec, 0.1 sec, 1 sec, 10 sec
Measurement error	Base oscillator accuracy ±1 count

Period measurement	Measures A trigger signal
Range	LF mode: 0.5 μsec to 10 sec HF mode: 10 nsec to 1μsec (1000 periods or more)
Number of periods	LF mode: 10^0, 10^1, 10^2, 10^3 HF mode: 10^3, 10^4, 10^5, 10^6
Base time	0.1 μsec
Measurement error	Base oscillator accuracy $\pm\left(\frac{\pm\text{trigger error} \pm 0.1\,\mu\text{sec}}{\text{Number of period}}\right)$
Minimum input Push width	LF mode: 0.25 μsec HF mode: 5 nsec

Time interval measurement	Time interval of portion set on CRT with START, STOP cursor is measure.
Range	0.5 μsec to 10 sec
Base time	0.1μ sec
Measurement error	± (A sweep rate x 10 div x 3/1000) ±0.2μsec or less
Delay time measurement	Delay time (A sweep start to B sweep start)
Range	0.5 μsec to 10 sec
Base time	0.1 μsec
Measurement error	± (A sweep rate x 10 div x 2/1000) ± 0.2μ sec or less

A EVENT IN DELAY TIME

	Number of A sweep trigger (A sweep start to B sweep start)
Count resolution	0.1 μsec
Minimum input pulse width	0.05 μsec
Maximum count	99,999,999
Count error	

$$\pm\left(\frac{\text{A sweep rate x 10 div x 2/1000}}{\text{period of A sweep trigger signal}}\right) \pm 1 \text{ count}$$

EXT INPUT	Frequency and period of signals input from an external source may be measured in the HF mode.
Frequency range	1 MHz to 150 MHz (with 1/1000 prescaler)
Period range	6.7 nsec to 1 μsec (1000 periods or more)
Measurement error	Frequency: Base oscillator accuracy ±1 count Period: Base oscillator accuracy $\pm\left(\frac{\text{trigger error} \pm 0.1\,\mu\text{sec}}{\text{measured frequency}}\right)$
Input voltage	0.1 Vrms to 2 Vrms
Input coupling	AC only
Input RC	Approximately 1MΩ//40pF or less
Maximum input voltage	250 V (DC + peak AC)

General

Display	Zero-blanking, storage display with red LEDs, Non-storage display only with events in delay time.
Displayed digits	dicimal 8 digits
Display time	Counted time + approximately 0.2 sec
Self-check	10 MHz (only with frequency measurement)
Read units	kHz, MHz, μsec, nsec displayed with 2 LEDs.
Alarm operation	Period measurement (LF mode only): 0.2 μsec to 0.4 μsec or less. Interval measurement, delay time measurement: 0.2 μsec to 0.4 μsec or less. The unit display LEDs blink for the input signals listed above.
Reset	Both automatic and manual (AC reset). When single operation time is measured with time interval measurement, the system is set in the wait status by pressing the reset button (since the interval is measure every second period).
Base oscillator	Oscillator frequency: 10,000 MHz Stabilty: ± 5 x 10^{-7}/Week Temperature stability: ± 10 x 10^{-6}/(0° to 40 °C)

1-2-9 Digital Multimeter

DC Voltage Measurement

Table 1-3

Range	Accuracy (23°C ±5°C, 80% or less)	Resolution	Input resistance
200mV	±0.25% of rdg ±0.05% of range	100μV	10MΩ ±2%
2 V		1mV	
20 V		10mV	
200 V		100mV	
1000 V	±0.25% of rdg ±0.1% of range	1V	

rdg: Displayed value, range: Range value

Temperature coefficient	0° C to 18°C, 28° C to 50° C 200mV to 200V range: (±0.03% of rdg ±0.0075% of range)/° C 1000 V range (±0.03% of rdg ±0.015% of range) /°C
Range select	Manual
C M R	100 dB or more 50/60Hz
N M R	40 dB or more 50/60 Hz
Maxismum input voltage	± 1,100 VDC

AC Voltage Measurement

Table 1-4

Range	Accuracy (23°C ± 5°C, 80RH or less)	Resolution	Input resistance
200mV	±0.75% of rdg ± 0.25% of range	100μ V	10MΩ ± 2%// 300 pF or less
2V		1mV	
20V		10mV	
200V		100mV	
750V	±10% of rdg ± 0.4% or range	1 V	

Display used the average value rectification method (actual value corrected)

Frequency range	40 Hz to 500 Hz
Temperature coefficient	0°C to 18°C, 28°C to 50°C 200 mV to 200 V range: (±0.01% of rdg ±0.02% of range)/°C 750V range: (±0.15% or rdg ±0.06% of range)/°C
Ragne select	Manual
Maximum input voltage	1,100 VDC or 750 Vrms

Resistance Measurement

Table 1-5

Range	Accuracy (23°C±5°C, 80% RH or less)	Resolution	Input current
200 Ω	±0.25% of rdg ±0.05 % of range	100m Ω	1.9mA
2k Ω		1 Ω	1.2mA
20k Ω		10 Ω	0.25mA
200k Ω		100 Ω	28 μA
2000k Ω	±0.5% or rdg ±0.1% of range	1000 Ω	2.8μ A
20M Ω	± 2% of rdg ±0.1% of range	10k Ω	0.28μA

Temperature coefficient	0°C to 18°C, 28°C to 50°C 200 Ω to 200kΩ range: (±0.03% of rdg ±0.0075% of range)/°C 2000 kΩ range: (±0.075% of rdg ±0.015% of range)/°C 20 M Ωrange: (±0.3% of rdg ±0.015% of range)/ °C
Range select	Manual
Maximum voltage across terminals	3.5 V or less
Maximum input voltage	± 400 VDC/rms

DC Current Measurement

Table 1-6

Range	Accuracy (23°C ±5°C, 80% RH or less)	Resolution	Burden voltage
2mA	±0.8% of rdg ±0.05% of range	1μA	0.3 V or less
20mA		10μA	
200mA		100μA	
2000mA	±2% of rdg ±0.05% of range	1mA	0.7V or less

In case of 2A or more, protected by fuse.

Temperature coefficient	0°C to 18°C, 28°C to 50°C (±0.1% of rdg ±0.0075% of range)/°C

AC Current Measurement

Table 1-7

Range	Accuracy (23°C ±5°C, 80% RH or less)	Resolution	Burden voltage
2mA	±2% of rdg ±0.25% of range	1μA	0.3 V or less
20mA		10μA	
200mA		100μA	
2000mA		1mA	0.7V or less

Display uses the average value rectification method (actual value corrected)

In case of 2A or more, protected by fuse.

Frequency range	40 Hz to 500 Hz
Temperature coefficient	0° C to 18°C, 28°C to 50° C (±0.3% of rdg ±0.02% of range)/ °C

General

Display	Static display with 4 x 8 red LEDs
Maximum displayed	1999 or −1999
Operation	Drift compensation integration
Polatiry	Automatic switching
Units	mV, V, Ω, kΩ, MΩ, mA displayed with 3 LEDs.
Range exceeded indication	Highest digit 1 or −1
Range select	Manual
Sample time	Approximately 400 msec/cycle

1-2.8 Power Supply

Voltage Range	100V (90 to 110 V)/ 115V (103 to 128 V)/ 220V (195 to 242 V)/ 230, 240V(207 to 264 V)/ AC One of these voltage ranges can be selected with voltage selector plug
Frequency Range	50 to 440 Hz
Power Consumption	Approximately 50 W (at 100 VAC)

1-3 PHYSICAL CHARACTERISTICS

Weight	Approximately 8.5 kg (without panel cover and accessories bag)
Dimensions	320 ±2 (W) x 160 ±2 (H) x 400 ± 2 (L) (mm) See Figure 1-1.

1-4 ENVIRONMENTAL CHARACTERISTICS

Operating Temperature	−10 °C to −50 °C
Operating Humidity	40 °C, 90% Relative Humidity
Storage Temperature	−20 °C to 70 °C
Storage Humidity	70° C, 80% Relative Humidity
Altitude	Operating: 5,000 m maximum (atmospheric pressure 405 mm Hg) Non-operating: 15,000 m maximum (atmospheric pressure 90.4mmHg)
Vibration	From 10 Hz to 55 Hz and back in 1 minute; double amplitude 0.63 mm; for 15 minutes each in vertical, horizontal, and longitudinal directions for a total of 45 minute
Impact	One side is raised to an elevation angle of 45° (10 cm maximum), and let fall on a piace of hard wood. Each side is put to this test 3 times.
Drop	A package ready for transpotation is dropped from a height of 90 cm.

1-5 ACCESSORIES

Power cord	1
Probe (SS-0011)	2
Fuse (FSA-1)	2
Panel cover	1
Dust cover	1
Instruction Manual	1
Accessories bag	1

For the method of removing the accessories bag, refer to Figure 1-2.

Figure 1-1. Dimensional Diagram

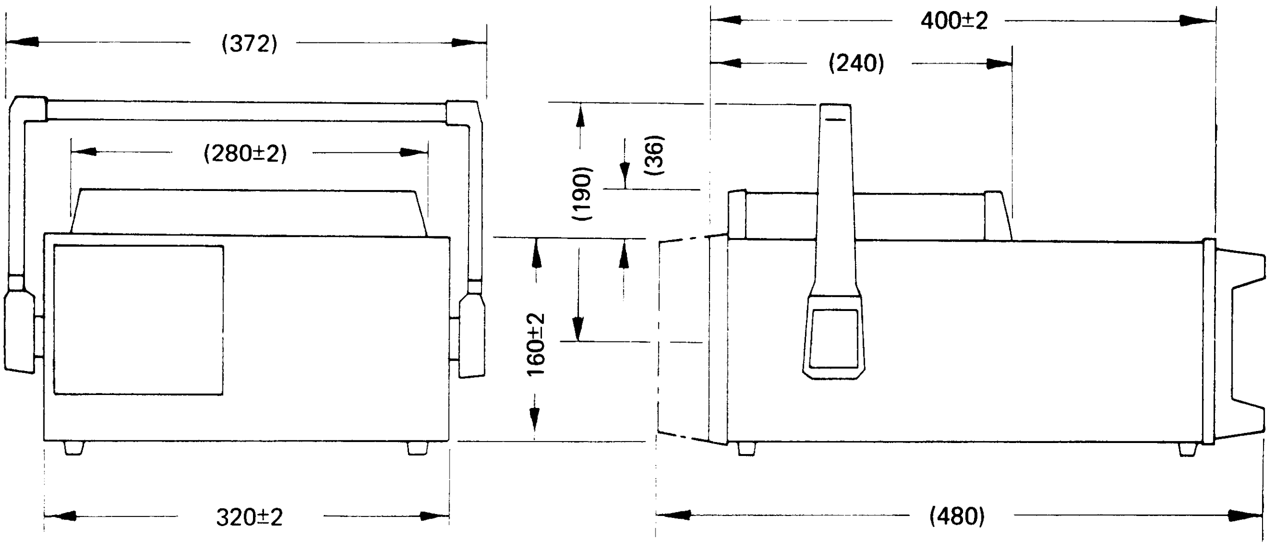

NOTES

Section 2

Operating Information

2-1 OPERATING PRECAUTIONS

Observe the following precautions in operating the SS-5710D.

Ambient temperature and ventilation

The SS-5710D operates normally in the ambient temperature range of −10 °C to +50 °C. Be sure to use the SS-5710D within this range. Use of it outrange can result in some trouble. Do not place anything near the ventilating hole in the cover to block heat dissipation.

Line voltage check

Before plugging the power cord to an electrical output, be sure to check its voltage. The SS-5710D can be used on the line voltage shown in Table 2-1, which can be selected with the voltage selector plug on the rear panel. Also check the fuse in the rear panel as shown in Table 2-1. Operating the SS-5710D on other than the specified voltages can result in breakdown.

Before changing the voltage selector plug, or replacing the fuse, be sure to unplug the power cord from the electrical outlet.

Table 2-1

Set Position	Center Voltage	Voltage Range	Fuse
A	100 V	90 to 110 V	1 A slow-blow
B	115 V	103 to 128 V	
C	220 V	195 to 242 V	0.5 A slow-blow
D	230/240 V	207 to 264 V	

Be sure to replace the fuses with the correct ones.

The SS-5710D uses the fuses shwon in Table 2-2 to protect the circuits from damage by overcurrent.

If any of these fuses is burnt out, carefully determine the cause, repair a defect if any, and replace it with the correct one. Never use fuses other then specified because it can cause not only troubles but danger.

Table 2-2

Circuit No.	Fuse Spec.	Function	Position
$\boxed{13}$ F 01	1 A slow-blow	Voltage selector plug A or B	Rear panel See Figure 2-4.
	0.5 A slow-blow	Voltage selector plug C or D	
$\boxed{13}$ F 0 2	1 A slow-blow	CRT circuit protection	See Figure 2-1.

Use the supplied power cord.

Use the supplied 3-core power cord.

When operating the SS-5710D on the line voltage form a 2-core electrical outlet with the supplied 3-core power cord and a conversion adaptor, be sure to ground the ground terminal on the rear panel to prevent danger.

Signal applies to the probes and input connectors

Be sure to connect the probe ground leads and input

Figure 2-1. Fuse Locations

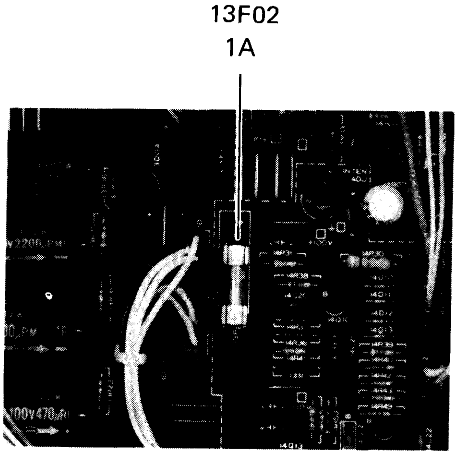

connector ground terminals to the ground voltage part of the object to be measured. If they are connected to other point, the ground leads or terminals will be shorted through the SS-5710D resulting in breakage of the measuring object or the SS-5710D (inclucing its probes). This must be absolutely avoided.

Do not increase light intensity excessively

Do not increase the light intensity of traces or spot more than necessary. Excessive light intensity can not only result in eyes fatigue but, if left for a long time, burn the CRT phosphor surface.

Using the SS-5710D with the CRT screen up

The SS-5710D can be used with the CRT screen up as shown in Figure 2-2 (a). Be careful not to bring the SS-5710D down by pulling hard the probes connected to the signal input connector.

Symbol Mark of Digital Multimeter

⚠ Warning

This symbol indicates that the user should refer to the manual before using the SS-5710D. The maximum voltage and current which may be applied to the terminals as shown below.

DC voltage measurement	±1,100VDC
AC voltage measurement	±1,100VDC or 750Vrms
Resistance measurement	±400VDC/rms
DC current measurement	2A
AC current measurement	2A

⚡ Flash warning

This symbol indicates that a voltage of 1kV or more is applied to the terminal from in or outside the multimeter. When measuring high voltages, particular care should be taken to avoid electric shouck.

LO Terminal

The LO terminal is floating (ie., not earthed) with a dielectric resistance to GND of ± 500 VDC. To prevent danger to the user, it should therefore not be connected to the GND terminals of other measuring equipment while voltage is applied to it.

Noise

An unstable display, and increased measurement errors, will result if the multimeter is used near sources of electrical noise.

Function switch (V, A, Ω)

Always check the setting of the function switch before beginning measuremnet. Do not alter the setting of the function during measurement (while voltage is applied to the signal input terminals).

2-2 OPERATION OF THE HANDLE

The carring-hancle of the SS-5710D can be unlocked if the rotary part (root) the handle is pused inwards (in the arrow direction) as shown in Figure 2-2 (d).

If both the right and left ends are pushed, they can be unlocked together, and the handle can be turned as it is.

If the rotary part is released, the handle is automatically locked.

The handle can be positioned as desired for carrying (as shown in Figure 2-2 (d)) or as stand for signal observation (as shown in Figure 2-2 (c)).

Fold the handle back as shown in Figure 2-2 (b), if possible, when storing the SS-5710D.

2-3 CONTROLS AND SWITCHES

The functions of the switches and controls on the front and rear panels are explained. Refer to Figure 2-3, 2-4, and 2-5.

The front panel is color-coded. The power supply, CRT, and vertical deflection controls are dark-olive; trigger and horizontal deflection controls are light-olive.

If the VARIABLE contols for vertical deflection factor and sweep rate are set to other than the CAL position, the indicator lamp lights to indicate non-calibration.

In the description of the switches, the word IN indicate their pushed position (▬) and the word OUT their released position (█).

Figure 2-2 How to Place the SS-5710D and Use the Handle

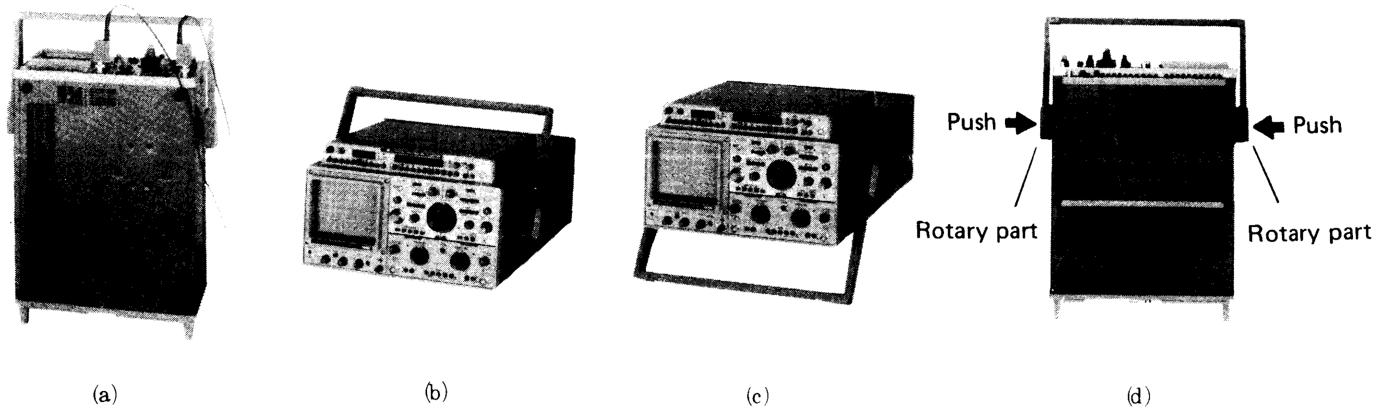

(a) (b) (c) (d)

Figure 2-3. Front Panel

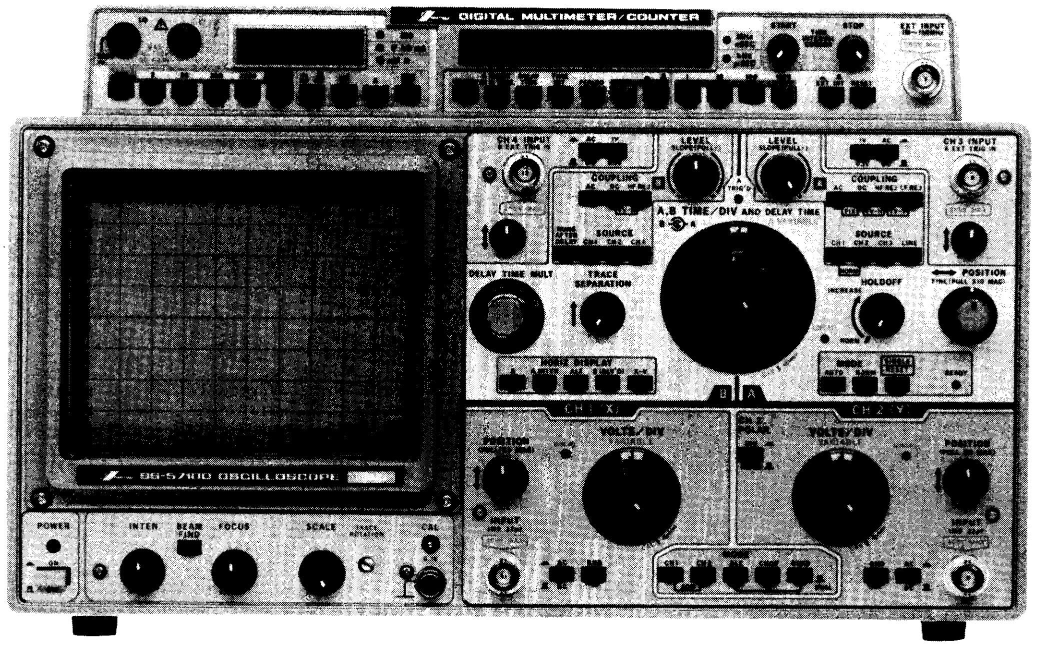

Figure 2-4. Rear Panel

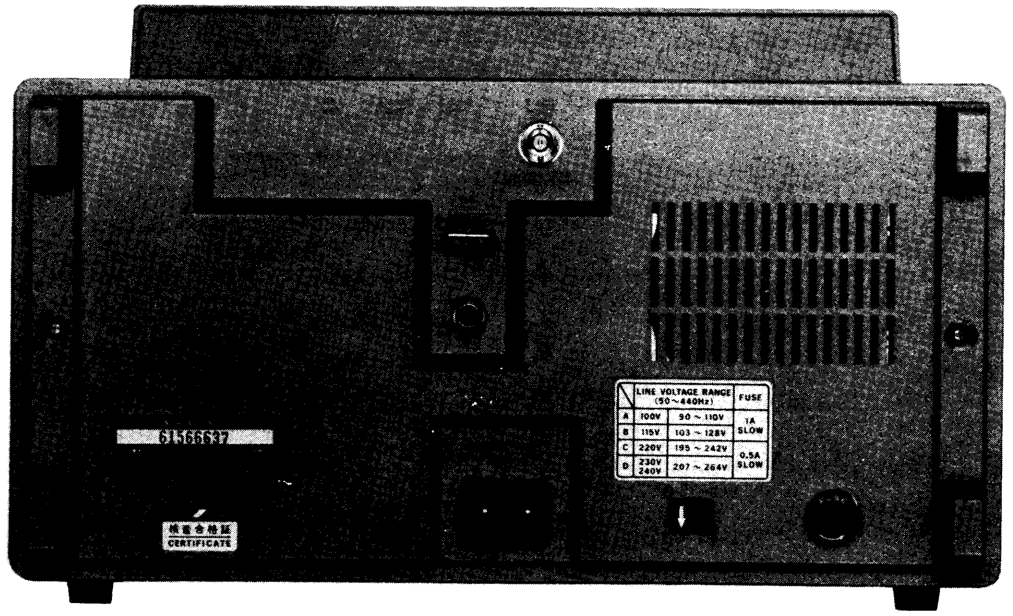

2-3-1 Front Panel

Power, CRT and Calibration controls

POWER ON/OFF

Power switch

INTEN

Adjust the brightness of traces or spot. Turning the control clockwise increases intensity, and turning it counterclockwise decreases intensity.

BEAM FIND

Search the trace or spot positions. If the button is pushed when a trace or spot is outside the screen, it appears on the CRT screen.

FOCUS

Focus traces or spot.

SCALE

Adjust the brightness scale. Turning it clockwise brightens the scale, and turning it counterclockwise darkens the scale.

TRACE ROTATION

Adjust traces parallel to the horizontal graticule lines.

CAL 0.3 V

Signal output terminal of a square wave with a calibration voltage of 0.3 V and repetition frequency of 1 kHz. Use for adjusting vertical axis deflection factor and probe phase.

⊥ (Ground terminal for measurement)

Signal ground terminal for measurement. Connect it to the ground terminal of the circuit to be measured.

Vertical Deflection System

↕ POSITION (PULL x5) (CH 1, CH 2)

For position adjustment and waveform magnification. Traces and spot can be positioned with this control. Turning the control clockwise moves traces or spot upward, and turning the control counterclockwise moves it downward,.

When the control is pulled, the vertical deflection factor is magnified 5 times.

INPUT (CH 1, CH 2)

Connector for connecting a probe or cable to apply input signal to be measured.

The maximum input voltage is 400 V (DC + peak AC) where input signals are directly applied; or 600 V (DC + peak AC) where a probe is used.

(For the maximum input voltage where a probe is used, refer to the instruction manual for probe.)

AC-DC (CH 1, CH 2, CH 3, CH 4)

Switch for selecting a signal input coupling.

AC: The vertical deflection input is AC-coupled. Even if AC input signal is superimposed on DC signal, the DC component is blocked so only the AC component is allowed to pass.

DC: The vertical deflection input is DC-coupled. All the frequency components, including DC, are allowed to pass through.

GND (CH 1, CH 2)

When the GND position is selected, input signal is not connected to the vertical amplifier, but the input circuit of the vertical amplifier is grounded. (Input signal is not grounded.) Thus, the ground voltage (normally serving as a reference level for measurement) can be easily confirmed.

UNCAL (CH 1, CH 2)

If the VARIABLE control is set to other than the CAL position, this lamp lights to indicate non-calibration.

VOLTS/DIV (CH 1, CH 2)

Set the vertical deflection factor to select one of 11 positions from 5 mV/div to 10 V/div to suit input signal level. If the x5 MAG button is pushed in at 5 mV/div or 10 mV/div, a high deflection factor of 1 mV/div or 2 mV/div can be obtained. The VOLTS/DIV switches represent the voltage (of an input signal) per division of the scale on the CRT screen where the VARIABLE control is set to the CAL position.

VARIABLE (CH 1, CH 2)

The VARIABLE controls are used to continuously attenuate the vertical deflection factor according to input signals. The deflection factor is 1/2.5 or more when the control is turned fully counterclockwise.

CH 2 POLAR INV/NORM

Select CH 2 polarity.
NORM when the button is OUT (█) position; INV when the button is IN (▄). where the polarity is inverted.

MODE

These MODE button are used for switching vertical deflection operation. The following modes can be selected.

CH 1: Only signal which is applied to CH 1 (x) INPUT is displayed on the CRT screen.

CH 2: Only signal which is applied to CH 2 (Y) INPUT is displayed on the CRT screen.

ALT: The two signals applied to CH 1 and CH 2 INPUT connectors are displayed on the CRT screen. This mode is suitable for observing waveforms where TIME/DIV is set to a position faster than 1 msec/div.

CHOP: The two signals applied to CH 1 and CH 2 INPUT connectors are displayed on the CRT screen. This mode is suitable for observing waveforms where TIME/DIV is set to a position slower than 1 msec/div.

ADD: The ADD mode is selected when both CH 1 and CH 2 buttons are simultaneously pushed in. This mode is used for observing the algebraic sum of the signals applied to CH 1 and CH 2 INPUT connectors or their difference. CH 1 ±CH 2 can be selected with CH 2 POLAR.

QUAD: If the QUAD button is IN when the ALT or CHOP button is IN position, quadruple traces are displayed on the CRT screen. This mode is used for simultaneously displaying the signals applied to CH 1, CH 2, CH 3, and CH 4 INPUT connectors on the CRT screen. Either of the two following quad modes can be selected.

> Quad-trace display in the ALT mode: If the ALT and QUAD buttons are pushed in, ALT operation takes place to display 4 signals on the CRT screen.
>
> Quad-trace display in the CHOP mode: If the CHOP and QUAD button are pushed in, CHOP operation takes place to display 4 signals on the CRT screen.

If the HORIZ DISPLAY ALT button is IN during the above operations, the 4 signals are displayed on the CRT screen. If the QUAD button is pushed again to the out (DUAL) position, the SS-5710 operates in the ALT or CHOP mode as indicated on the panel.

CH 3 INPUT (A EXT TRIG IN)

Connect a probe or cable for applying a signal input to be measured or an external trigger signal input for A-sweep. The maximum input voltage is 250 V (DC + peak AC) where the input signal is directly applied; or 600 V (DC + peak AC) where a probe (10 : 1) is used.
(For the maximum input voltage where a probe is used, refer to the instruction manual for probe.)

↕ (CH 3, CH 4)

Select a trace vertical position for CH 3 (CH 4) with this control. Turning it clockwise moves a trace upward, and turning it counterclockwise moves it downward.

1 V - 0.1 V(CH 3, CH 4)

Select CH 3 (CH 4) deflection factor with this control. The value indicated represents a voltage per division of the graticule on the CRT screen.

CH 4 INPUT (B EXT TRIG IN)

Connect a probe or cable for applying a signal input to be measured or an external trigger signal input for B-sweep.

The maximum input voltage is 250 V (DC + peak AC) where the input is directly applied, or 600 V (DC + peak AC) where a probe (10 : 1) is used.
(For the maximum input voltage where a probe is used, refer to the instruction manual for probe.)

Horizontal Deflection Controls

HORIZ DISPLAY

The following modes can be selected with the horizontal deflection control buttons.

A: A sweep mode for normal waveform observation. Sweep time can be selected with the A TIME/DIV switch and A VARIABLE control.

A INTEN: A delayed sweep mode (in which a part of the input signal waveform is magnified for observation)

ALT: Alternate A INTEN sweep and B sweep

B (DLY'D): A sweep delay mode (in which the part selected by delayed sweep is magnified)

X-Y : A mode in which the SS-5710D is used as an X-Y scope, CH 1 serving as X axis and CH 2 as Y axis.

MODE

This button selects either of the following trigger modes.

AUTO: In the AUTO mode, a sweep is started if trigger condition is readied; or a free-running sweep takes place otherwise.

NORM: In the NORM mode, a sweep is started if trigger condition is readied; or no sweep take place otherwise.

SINGLE/RESET: The single trigger mode. This button also has a RESET function so, no trigger signal, it puts the SS-5710D into a ready condition, which is indicated by the lighting of the READY lamp on the right.

READY

This lamp lights when the SS-5710D is in a ready state in the single sweep mode.

←→ POSITION FINE (PULL x10 MAG)

This control has position adjusting and waveform magnifying functions.

It has two kinds of knobs for position adjustment: The large grey knob for coarse horizontal position adjustment, and the small red knob for fine horizontal position adjustment. Turning the knobs clockwise moves the waveform to the right-hand, and turning them counterclockwise moves it to the left-hand.

When the small red knob is pulled, the x10 MAG function is set to magnify the waveform 10 times in the horizontal direction.

COUPLING (A-Sweep)

For selecting an A-sweep trigger coupling (trigger circuit input coupling).

AC: AC coupling is selected. Trigger signal DC component is blocked. AC signal only is used for triggering.

DC: DC coupling is selected. DC can be used for triggering.

HF REJ: Frequencies over approximately 10 kHz are attenuated by a lowpass filter. Suitable for observing signals cleared of high-frequency noise.

LF REJ: Highpass filter coupling to attenuate low frequencies under approximately 10 kHz.

Suitable for observing signals cleared a low-frequency noise.

FIX: If both the AC and DC buttons are simultaneously pushed in, the trigger level is fixed nearly at the zero point. Thus, it is not necessary to operate the LEVEL control.

TV-H: If both the DC and HF REJ buttons are simultaneously pushed in, TV-H coupling is selected. This trigger coupling is used for ovserving a composite video signal waveform over a period of 1 H by triggering with a television horizontal trigger pulse.

TV-V: If both the HF REJ and LF REJ buttons are simultaneously pushed in, TV-V coupling is selected. This trigger coupling is used for observing a composite video signal waveform over a period of 1 V by triggering with a television vertical trigger pulse.

SOURCE (A-Sweep)

Select the SOURCE of A-sweep trigger signal.

CH 1: The input signal applied to CH 1 INPUT is branched out as internal trigger signal.

CH 2: The input signal applied to CH 2 INPUT is branched out as internal trigger signal.

CH 3: The input signal applied to CH 3 INPUT is branched out as internal /external trigger signal.

LINE: The SS-5710D's power line signal is used as trigger signals. This mode is used for observing line signals and line harmonics.

NORM: If both the CH 1 and CH 2 buttons are simultaneously pushed in, the NORM mode is selected, in which the signal for the waveform displayed on the CRT screen in connection with a vertical mode is used as a trigger signal. (For a detailed description of trigger signal selection, refer to the subsequent paragraph on triggering.)

HOLDOFF

This control is used for stabilized synchronization of complex (composite) pulse waveforms. Turning the control fully counterclockwise to NORM minimizes the holdoff period, and turning it clockwise continuously increases the holdoff period.

LEVEL SLOPE (PULL–) (A-Trigger, B-Trigger)

This control has trigger level setting and trigger slope selecting functions.

Push it for positive-going slope trigger level selection; or pull it for negative-going slope trigger level selection.

A TRIG'D

This lamp lights to indicate a triggering state.

A, B TIME/DIV and DELAY TIME

The outer knob is for A TIME/DIV and DELAY TIME, and the inner knob for B TIME/DIV.

The A TIME/DIV AND DELAY TIME control has 22 A-sweep positions from 50 nsec/div to 0.5 sec/div, and selects delays in A INTEN sweep or B (DLY'D) sweep. The value of each position of the control represents a sweep rate and delay time per division on the CRT screen where the A VARIABLE control is turned fully clockwise to the CAL position.

The B TIME/DIV control has 19 B-sweep positions from 50 nsec/div to 50 msec/div, but no VARIABLE control.

A VARIABLE

Provides continuously the varies A-sweep rate. If the control is turned fully counterclockwise, the value of where the TIME/DIV switch is set at least 2.5 times or more.

A UNCAL

This lamp lights to indicate that A sweep rate is uncalibrating state when A VARIABLE control is out of CAL position.

DELAY TIME MULT

This potentio-meter selects the amount of delay time between the start of A sweep and the start of B sweep.

COUPLING (B-Sweep)

For selecting a B-trigger coupling (trigger circuit coupling).

If the DC and HF REJ buttons are simultaneously pushed in, TV-H is selected.

All functions are the same as those of A-sweep except for LF REJ, TV-V and FIX.

SOURCE (B -Sweep)

The SOURCE buttons are used for selecting B-sweep trigger signals and a type of delay (continuous delay or triggered delay).

RUNS AFTER DELAY: When the button is IN, RUNS AFTER DELAY is selected for continuous delay.

CH 1: Function is the same as that of A-sweep.

CH 2: Function is the same as that of A-sweep.

CH 4: The input signal applied to CH 4 INPUT is branched out as trigger signal. This function corresponds to the external trigger function of a dual-trace oscilloscope.

(If the CH 1, CH 2, or CH 4 button is pushed in, the triggered delay mode is selected.)

↕ TRACE SEPARATION

This controi is used for moving the B-sweep waveform above the A INTEN sweep waveform on the CRT screen when the HORIZ DELAY button ALT is IN. If the contol is turned fully counterclockwise, the A INTEN sweep and B-sweep waveforms overlap, and when the control is turned fully clockwise, the B-sweep wavefrom moves 4 divisions or more.

Counter

See Figure. 2-5.

CHECK

Used for self-check.

A EVENT IN D TIME

Indicates the number of A sweep trigger signals within the delay time (from the A sweep start point to the B sweep start point) with delay sweep.

DELAY TIME

Indicates the delay time (from the A sweep start point to the B sweep start point) with delay sweep.

TIME INT

Used to measure the interval between the START and STOP cursors on the waveform on the CRT.

PERIOD

Set when period is measured. The measurement range is 0.5 μsec to 10 sec in the LF mode, and 10 nsec to 1 μsec in the HF mode.

FREQ

Set when frequency is measured. The measurement range is 0.1 Hz to 10 MHz in the LF mode, and 1 MHz to 100 MHz (150 MHz with EXT INT) in the HF mode.

HF-LF

Used to select measurement range when measuring frequency or period.

RANGE (0.01, 0.1, 1, 10/1, 100, 1000)

These switches are used to select the position of the decimal point when the frequency or period of an input signal is measured. The upper display indicates period, the lower display, gate time (sec).

EXT-INT

This switch is used to select an internal signal source (signal supplied from the oscilloscope) or external signal source signal supplied via the EXT INPUT terminal) when measuring frequency or period.

RESET

This switch initializes the counter (ie., sets it to zero) so that it is ready for new input.

EXT INPUT 1M ~ 150 MHz

The external signal is input via this terminal when frequency or period is measured.

TIME INT EVENT CURSOR

These controls are used to set the position of the wave, form cursor on the CRT when time interval is measured.
START: Used to set cursor start point.
STOP: Used to set cursor stop point.

Figure 2-5. Counter

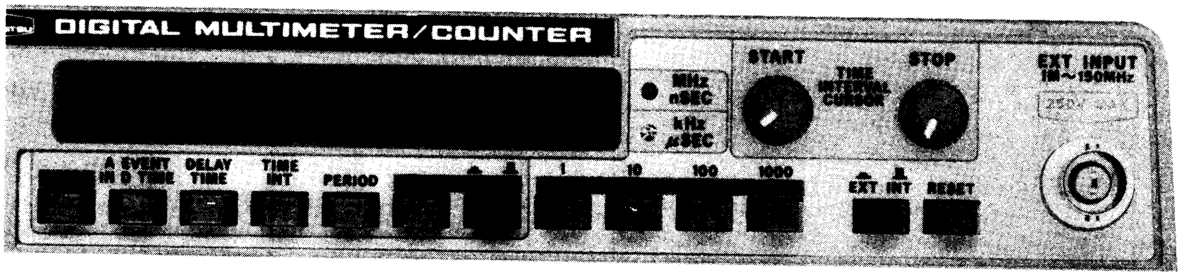

MHz • nSEC –kHz, μSEC

Used to set the unit in which measuremnt is displayed. The relevant of the two LEDs is lit to indicate which has been selected.

DISPLAY

Storage display using red LEDs. Non-storage display is possible only for A EVENT IN D TIME.

Digital multimeter

See Figure. 2-6.

LO-HI

Signal input terminals for use when measuring DC • AC voltage resistance and DC • AC current. Plug the black lead into the LO terminal, and the red, into the HI terminal.

200, 2, 20, 200, 2000, 20M

These switches are used to select the position of the decimal point when voltage, resistance, or current are measured.

AC-DC

This switch is used to select measurement of either AC or DC voltage or current.

V

Used when measuring DC or AC voltage.

A

Used when measuring DC or AC current.

Ω

Used when measuring resistance.

M Ω-V, kΩ, mA-mV, Ω

Used to set the unit in which measurement is displayed. The relevant of the three LEDs is lit to indicate which has been selected.

DISPLAY

Static display using red LEDs.

Figure 2-6. Digital Multimeter

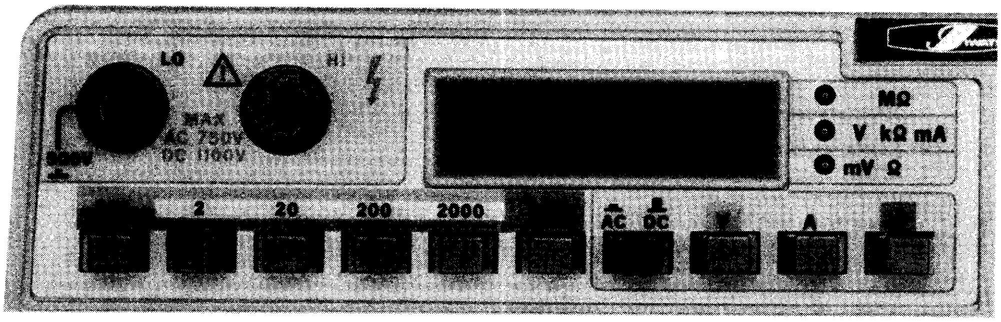

2-3-2 Rear Panel

Z AXIS INPUT

Apply a signal for external intensity modulation to this input terminal. The maximum input voltage is 50 V (DC + peak AC).

CAL 10 mA

A square wave current of 1 kHz, 10 mA flows through the current loop terminal in the arrow direction (from right to left). Use its current output for checking and calibrating the current probe.

⏚ (Ground terminal for protection)

Ground terminal for protecting the oscilloscope. When supplying a line voltage from a 2-core electrical outlet, be sure to connect this terminal to the ground for preventing danger.

AC LINE INPUT

AC voltage is supplied to this connector. Connect the supplied power cord to it.

A.B.C.D (Voltage Selector plug)

Set the voltage selector plug's arrow mark to one of the A, B, C or D position to suit the AC line voltage. Refer to the table of line voltage ranges.

FUSE

Fuse holder.

2-3-3 Bottom Cover

GAIN

This is for adjusting vertical deflection factor.

x5 BAL

This is for adjusting vertial deflection position when the PULL x5 MAG is pushed or pulled.

VARIABLE BAL

This is for adjusting the movement of vertical trace position when the vertical deflection VARIABLE control is turned.

Figure 2-7. Bottom cover

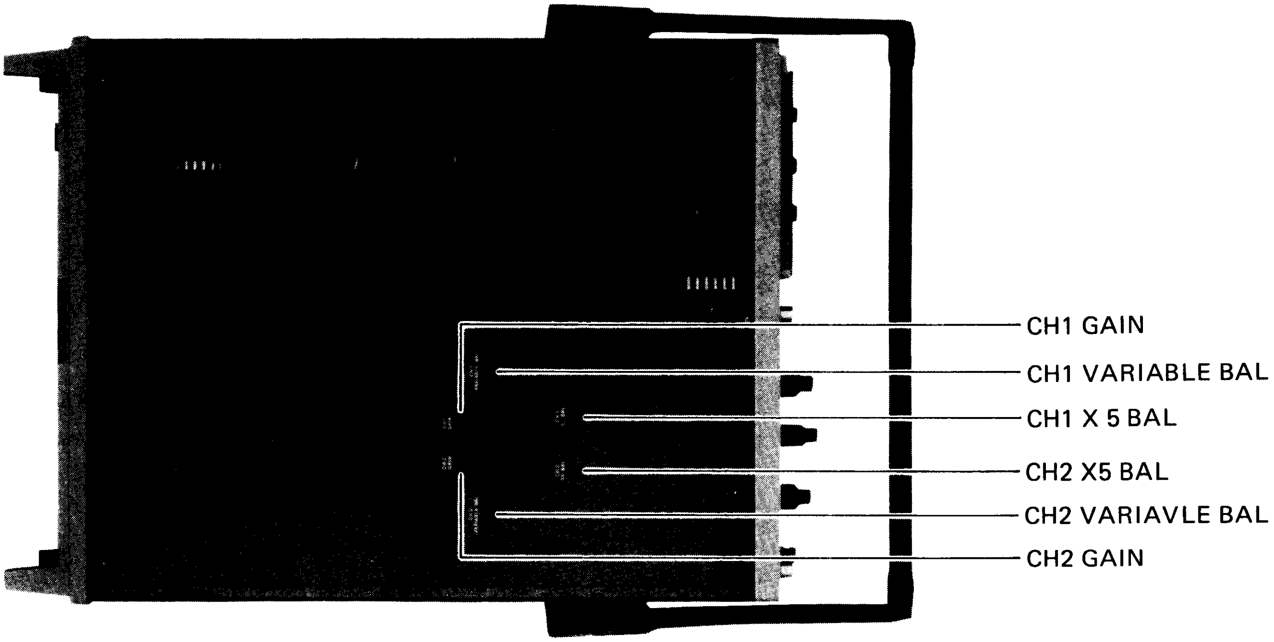

2-4 OPERATING INSTRUCTIONS

The basic operating instructions for the SS-5710D used for observing voltage waveforms are explained below.

2-4-1 Basic Operation for Signal Observation

The follwoing procedure applies where a CAL 0.3 V signal is applied to CH 1 INPUT with the supplied probe for observation.

Turning POWER On

Before connecting the power cord, check the AC line voltage with a voltmeter, and set the voltage selector plug to the proper position to suit the line voltage.

1. Set the POWER to OFF position, and connect the power cord to the AC LINE INPUT connector on the rear panel and an electrical outlet.
2. Set the controls as follows. See Figure 2-8 and Figure 2-9.

A INTEN	Midrange
MODE (Vertical)	CH 1
AC-DC (CH 1)	AC
↕ POSITION (CH 1)	Midrange
HORIZ DISPLAY	A
MODE (Horizontal)	AUTO
↔POSITION	Midrange
FINE (PULL x10 MAG)	Midrange (button IN)

3. Push the POWER button up to the ON position. A trace is displayed in about 15 seconds. Adjust its intensity as appropriately with the INTEN control.

Focusing

4. Set the A TIME/DIV switch to the 1 msec/div position, and adjust the FOCUS control to make the trace clear and sharp.

Applying signals and triggering

5. Set the controls as follows.

COUPLING (A-Sweep)	AC
SOURCE (A-Sweep)	CH 1
VOLTS/DIV (CH 1)	5 mV
VARIABLE (CH 1)	CAL

Figure 2-8. Power, CRT and Calibration controls

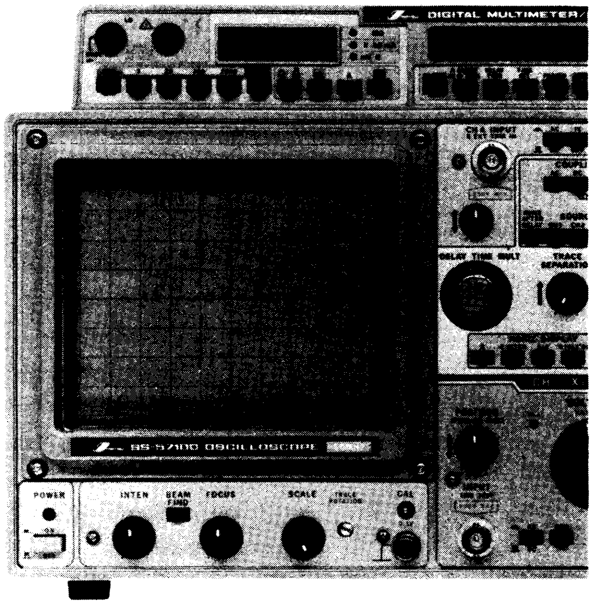

Figure 2-9. Vertical Deflection and Horizontal Deflection Controls

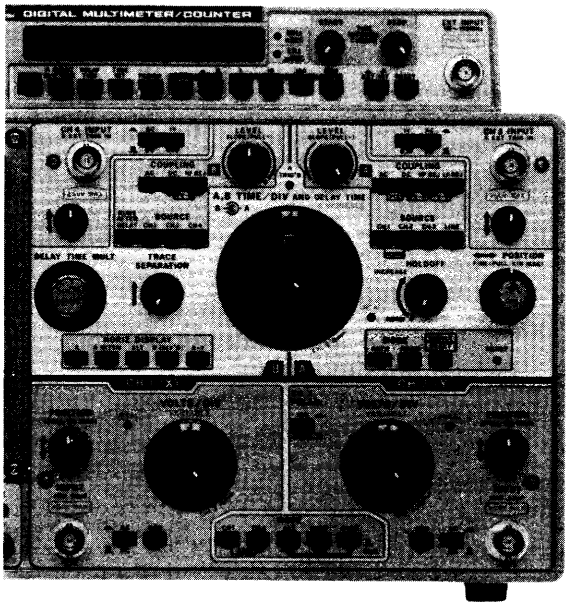

6. Using the supplied probe, connect CH 1 INPUT to the CAL. 0.3 V terminal.
7. Turn the LEVEL (A-Sweep) control to nearly the mid-range, and a 6-division calibration voltage waveform is displayed on the CRT screen. It is triggered by internal trigger (AC coupling) in the AUTO mode.

   For a detailed description of triggering, refer to Triggering in a subsequent paragraph.

Deflection Factor Setting

8. As VOLTS/DIV switch is turned form 10 mV, 20 mV, and on to 10 V, the deflection factor decreases so that the waveform amplitude on the CRT screen becomes small. The amplitude also decreases when the VARIABLE control is turned counterclockwise.

   Adjust the input deflection factor with the VOLTS/DIV switch and VARIABLE control so that the input signal has an amplitude easy to be observed on the CRT screen.

Sweep Rate Setting (A-Sweep)

9. As the A TIME/DIV switch is turned from 0.5 msec, 0.2 msec and on the 50 nsec, the displayed waveform that can be observed decreases. There are kinds of signals to be measured. To observe various signals on a suitable cycle, set an appropriate sweep rate with the A TIME/DIV switch and A VARIABLE control. For the sweep rate setting procedure, refer to the subsequent paragraph on sweep rate setting.

   The basic operation procedures for observing signal waveforms have been described above.

Figure 2-10.Calibrator waveform

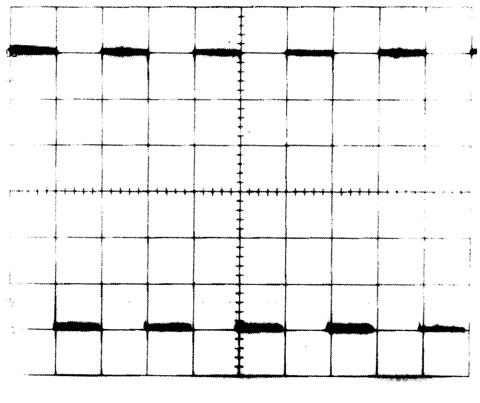

2-4-2 Applying Signals

Apply the signals to be observed to CH 1, CH 2, CH 3, and/or CH 4 INPUT connectors.

Generally a passive probe is used for applying a signal to the oscilloscope.

The use of a probe prevents the waveforms on the CRT screen from being adversely affected by the induction of an external electric field. If a 10 : 1 probe is used, the input impedance is higher than where a 1:1 probe is used, and thus the load effect on the signal source is lessened. This permits accurate waveform observation in spite of a high signal source impedance.

The 10:1 probe, however, attenuates the input signal to 1/10 so the VOLTS/DIV readings of input signal amplitude must be multiplied by 10.

The 1:1 probe is suitable for observing low-frequency low-level signals because a large load effect is produced on high-frequency signals.

(For a detailed description of the probe, refer to Section 3 MEASURING PROCEDURES and the instruction manual for probe.)

2-4-3 Signal Input Coupling Selection

Kinds of signals, including DC, AC, and AC superimposed on DC, may be applied for observation. For accurate observation of these kinds of signals, select the proper signal input coupling with the AC-DC switch.
(See Figure 2-11and 2-12.)

AC Coupling:

In AC coupling, a DC signal is blocked by a capacior so that only the AC signal passes it. Thus, the AC signal waveform will be out of the screen by the DC voltage so it can be observed with its amplitude increased on the screen. If a signal with a low repetition frequency is observed in the AC coupling mode, a sag appears in the waveform if the signal is a square wave; or if it is a sine wave, the amplitude on the screen is attenuated about –3 dB per 4 Hz from the actual one.

DC Coupling:

DC coupling is selected for observing all the frequency components of a signal input.

Ground Coupling:

The input of the vertical amplifier circuit is grounded so a ground level trace is displayed on the screen. The ground level normally serves as reference level in measurements.

2-4-4 Vertical Deflection Factor Setting

To observe a signal waveform, it must be displayed with an appropriate amplitude on the CRT screen.

The CH 1 and CH 2 VOLTS/DIV switches are deflection factor select switches, and their VARIABLE controls are for fine adjustment of deflection factor. (See Figure 2-11.)

If the VARIABLE controls are turned fully clockwise to the CAL position, the positions of the VOLTS/DIV switches directly indicate the selected deflection factors, which represent the voltage per division of the screen scale for the signal waveforms displayed.

The deflection factor select switches for CH 3 and CH 4 have two position, 0.1 V/div and 1 V/div, but no VARIABLE controls. (See figure 2-12.)

Figure 2-11. CH 1 VOLTS/DIV switch and VARIABLE control

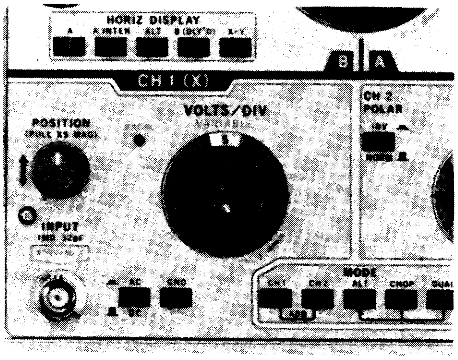

2-4-5 Triggering

It is necessary to have a correct understanding of the triggering procedure in using an oscilloscope.

The triggering procedure for A-sweep (where the HORIZ DISPLAY button A is IN) is described below. The triggering procedure for B-sweep that is necessary in delayed sweep operation is described in the subsequent paragraph on Waveform Magnification Operation.

The following must be set for A-sweep triggering.

- Trigger Signal

Selects CH 1, CH 2, CH 3, NORM, or LINE with the SOURCE button.

- Trigger Coupling

Selects AC, DC, HF REJ, LF REJ, FIX, TV-H, or TV-V with the COUPLING button.

- Trigger system

Selects AUTO, NORM, or SINGLE-RESET with the MODE switch.

- Slope

Selects either positive-going (+) or negative-going (—).

- Level

Selects a suitable trigger level.

- Hold off

Selects a suitable HOLD OFF time.

A detailed description of the above 6 items is given below.

Trigger Signal

To observe an input signal waveform, it is necessary to

Figure 2-12. CH 3 0.1 V-1 V and AC-DC switches

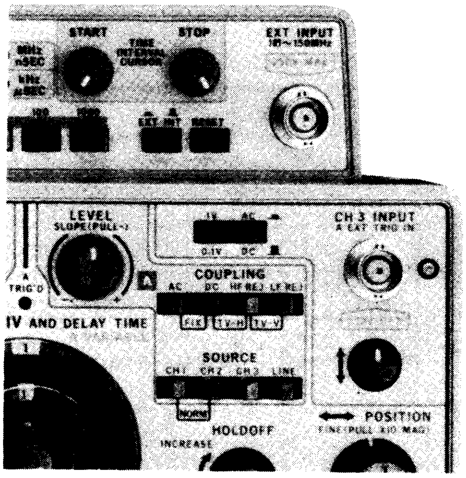

apply an input signal, or a signal which has a constant time relationship with the input signal (called a trigger signal), to the trigger circuit to drive it.

Select internal trigger (CH 1, CH 2, CH 3, NORM), external trigger (CH 3), or line trigger (LINE) with the SOURCE button.

Input signal applied to input connector is brached off from vertical deflection system and method that applies it to the trigger circuit is called internal trigger.

The input signal is also used as internal trigger circuit. Thus, operation is simple.

The method of applying an external input signal, or a signal which has a constant time relationship with the input signal, to the trigger circuit is called external trigger. External trigger has the follwing advantages.

- External trigger is unaffected by the channel to which an input signal is applied. In the internal trigger mode, the trigger signal amplitude changes whenever the deflection factor is changed, and thus the trigger level must be adjusted accodingly. In the external trigger mode, once trigger condition is established, the signals remain synchronized even if the signal to be measured changes in amplitude.
- If desired a specific time before, or after, an input signal waveform, apply this signal as trigger to EXT TRIG IN (CH 3) so that the desired waveform can be observed.

The mothod of applying a line waveform from the built-in power transformer to the trigger circuit is called line trigger, which is used for observing line waveforms and line high frequencies.

Internal Trigger (CH 1, CH 2, CH 3, NORM)

If SOURCE CH 1 is selected, the input signal that is applied to CH 1 is used as trigger signal.

If SOURCE CH 2 or CH 3 is selected, the input signal that is applied to CH 2 or CH 3 is used as trigger signal.

If SOURCE NORM (CH and CH 2 pushed in simultaneously) is selected, the input signal applied to CH 1 is used as trigger signal in the CH 1 vertical mode, or the input signal applied to CH 2 is used as trigger signal in the CH 2 vertical mode. In the ALT vertical mode, the input signal applied to CH 1 triggers CH 1, and that applied to CH 2 triggers CH 2. Alternate use of trigger signals to suit the display on the screen is convenient for comparison of waveforms. In the CHOP or ADD mode, use CH 1, CH 2, or CH 3 instead of NORM because trigger is generally unstable.

External Trigger (CH 3)

If SOURCE CH 3 is selected, the input signal that is applied to CH 3 is INPUT (A EXT TRIG IN) is used as external trigger signal.

Line Trigger (LINE)

If SOURCE LINE is selected, line trigger is available.

Trigger Coupling

The COUPLING button is used for selecting a coupling for the trigger circuit input. AC, DC, HF REJ, LF REJ, FIX, TV-H, or TV-V can be selected. Select one of them steady triggering according to the kind of trigger signal(AC, DC, composite video signal, etc.).

AC: The trigger circuit input is AC-coupled so the DC component of the trigger signal is blocked. Thus, only the AC component of the trigger signal is used for triggering. Generally, AC coupling is convenient, but triggering is difficult if the trigger frequency is below 10 Hz.

DC: The trigger circuit input is DC-coupled for DC triggering. If a AC trigger signal is superimposed on DC, whose voltage is outside the trigger level range, trigger is ineffective.

HF REJ: The trigger circuit input comprises a lowpass filter which rejects high-frequency trigger signals (over about 10kHz) and high-frequency noises mixed with high-frequency signals and passes only low-frequency components.

LF REJ: The trigger circuit input comprises a high pass filter which rejects low-frequency trigger signals (over about 10 kHz) and low-frequency noises mixed with the trigger signals, and passes only high-frequency components.

FIX: The trigger circuit input is AC-coupled and the trigger level is fixed nearly at 0 V, so trigger takes place without operating the LEVEL control.

TV-H: Uses a television horizontal synchronization pulse for triggering in observing signals over a period of 1H.

TV-V: Uses a television vertical synchronization pulse for triggering in observing composite video signals over a period of 1 V.

Trigger System

The SS-5710D offers selection of the trigger mode of AUTO, NORM, or SINGLE/RESET.

AUTO: Auto trigger is selected. If a trigger signal with the proper frequency and level is applied to the trigger circuit, trigger condition can be readed by turning the LEVEL control to an appropriate trigger level. In the following cases, however, free-running sweeps occur due to the absence of trigger condition.

1. No trigger signal.
2. A tigger signal too small.
3. The LEVEL control set out of the trigger signal used.
4. A trigger signal with a frequency below 50 Hz.

NORM: Normal trigger is selected. If a trigger signal with the proper frequency level is applied to the trigger circuit, trigger condition can be readied by turning the LEVEL control to an appropriate triggerlevel.

In the following cases, however, sweeps stop and the instrument gets into a ready condition due to the absence of trigger condition.

1. No trigger signal.
2. A trigger signal too small for the LEVEL control to match its level.
3. The LEVEL control set out of the trigger signal used.

SINGLE-RESET: Single sweep mode. For details, refer to the subsequent description of the single sweep mode.

SLOPE

Push the LEVEL control for triggering from a positive-going slope, or pull it for triggering from negative-going slope.

LEVEL

If the LEVEL control is nearly at the midrange trigger level is set place at neary 0 V.

The trigger level moves in the positive (+) direction as the LEVEL control is turned clockwise, or in the negative (–) direction as the control is turned counterclockwise. (See Figure 2-13.)

In the coupling mode FIX, the trigger level is fixed nearly at 0 V. Thus, it is not neccessary to operate the LEVEL control for triggering.

HOLDOFF

Complex waveforms of a pulse train may appear overlapped despite synchronization depending on sweep rate setting.

If that occurs, turn the HOLDOFF control from the NORM position (fully counterclockwise) toward INCREASE to change the holdoff time. If the HOLDOFF control is

Figure 2-13.

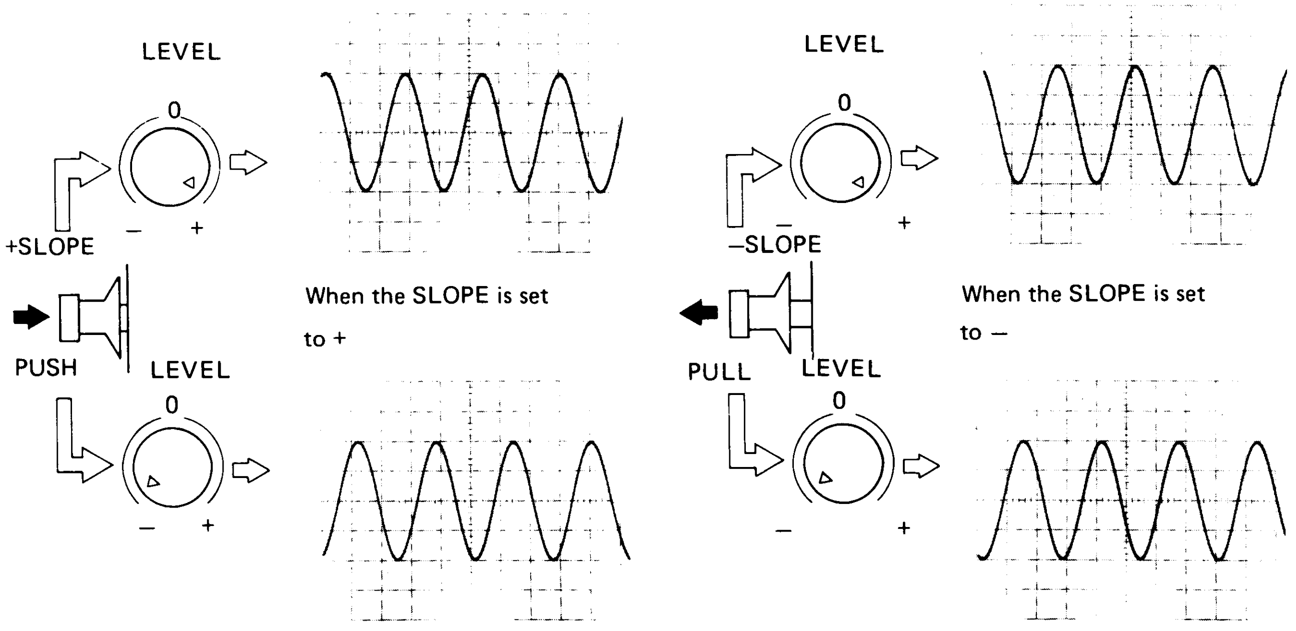

adjusted to start a sweep at the basic input signal cycle, the wave-forms are displayed in a way easy to observed.

2-4-6 Sweep Rate Setting

Many kinds of signals, some with a low repetition frequency and some with a high one, and some pulses with a fast rise and some with a low rise, may be measured. To measure these kinds of signals, it is necessary to select a suitable sweep rate.

When measuring signals with a low repetition frequency or slow rise pulses, for example, select a low sweep rate; and when measuring signal with a high repetition frequency or fast rise pulses, select a high sweep rate.

If the HORIZ DISPLAY mode A is selected, A-sweep (normal sweep) takes place. In this case, operate the A-sweep controls.

The sweep rate control used in the A-sweep mode is A TIME/DIV, and its VARIABLE control is for sweep rate fine adjustment. (see Figure 2-14.)

If the A VARIABLE control is turned fully clockwise to the CAL position, each position of the A TIME/DIV switch directly represents the sweep rate it indicates. If the A VARIABLE control is turned fully counterclockwise, the sweep rate pointed by the A TIME/DIV switch is 2.5 times the indicated value or less.

The sweep rate control used in the B-sweep mode is B TIME/DIV, which has no VARIABLE control.

Figure 2-14. TIME/DIV and A VARIABLE Controls

2-5 APPLIED OPERATIONS FOR SIGNAL OBSERVATION

The Oscilloscope SS-5710 has various convenient functions for signal observation. The following operating instructions for observing signals by use of its various functions are based on the assumption that you have sufficiently understood the basic operation procedures.

2-5-1 Operation for Dual-trace Observation

As described in the section on basic operations, the SS-5710D used as a dual-trace oscilloscope can display two signals to be measured on the CRT screen. Either ALT (alternate sweep) or CHOP (chopped sweep) can be selected for dual-trace observation. By using the ALT or CHOP mode as appropriate, dual-trace observation can be made at rates ranging from low to high speed.

Dual-Trace observation in the ALT mode

The ALT mode is suitable for observing two signals that have a high frequency. In this mode, a sweep occurs alternately between CH 1 and CH 2 so dual traces can be observed by applying two signals to CH 1 and CH 2 INPUT connectors.

The alternate sweep mode covers the full TIME/DIV range so a slow sweep rate makes dual-trace observation difficult.

Select the CHOP mode mentioned below when observing low-frequency signals.

Dual-Trace observation in the CHOP mode

The CHOP mode is suitable for dual-trace observation of low-frequency signals. CH 1 and CH 2 sweep are switched from one to the other about every 300 kHz so that, contrary to the ALT mode, it is difficult to observe high-frequency signals because their traces turn into dotted lines. Use the ALT mode for high-frequency signals.

2-5-2 Operation for Observation of the Sum of Two Signals or Their Difference

Observation in the ADD Mode

The ADD mode is selected if the vertical MODE buttons CH 1 and CH 2 are simultaneously pushed in. If signals are applied then to CH 1 and CH 2 INPUT connectors, the sum of the two signals (CH 1 + CH 2) can be observed. If the CH 2 POLAR button is pushed in to the INV position then, the difference between the two signals [(CH 1) + (−CH 2)] can be observed.

The deflection factor can be independently adjusted for CH 1 and CH 2 in the ADD mode so select a range to suit the purpose.

In the ADD mode, the ↕ POSITION controls for CH 1 and CH 2 may be used for adjusting trace positions, but for accurate measurement, the two POSITION controls should be kept nearly at the center.

Figure 2-15. Dual-trace observation in the ALT mode

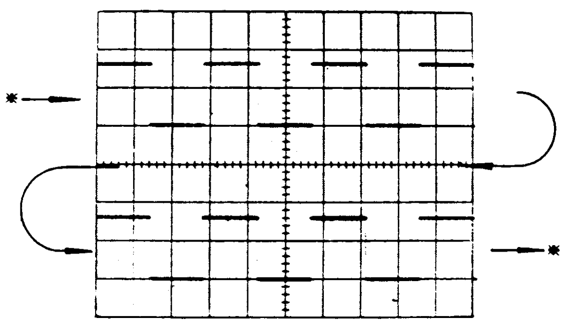

Figure 2-16. Dual-trace observation in the CHOP mode

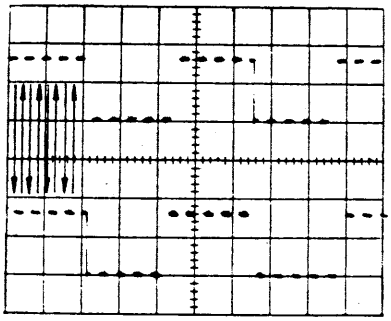

2-5-3 Operation for Quadruple-Trace Observation

The SS-5710D can simultaneously display up to four

Figure 2-17. Quadruple-trace observation

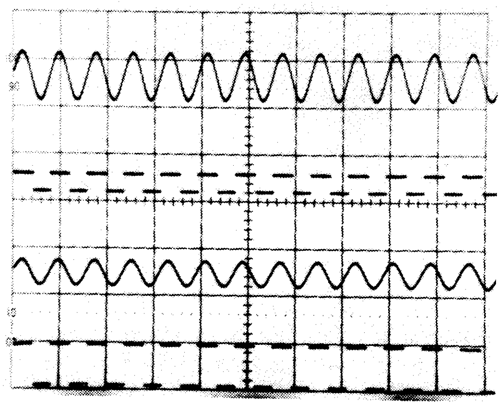

Figure 2-18. Quadruple-trace observation in the ALT mode

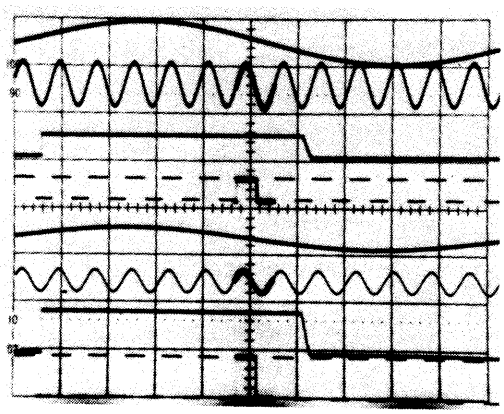

signals on the CRT screen aside form the dual-trace capability.

If the vertical MODE buttons ALT and QUAD, or CHOP and QUAD are simultaneously pushed in, traces for CH 1, CH 2, CH 3, and CH 4 are displayed on the CRT screen. Thus, by applying the four signals to be measured to the respective input connectors, the four signals can be simultaneously observed.

If the HORIZ DISPLAY mode ALT is selected under this condition, 8 traces are displayed on the screen as shown in Figure 2-18, giving A INTEN and B sweeps for the respective channels.

The vertical axis of quadruple traces is displayed by chopped operation if the vertical MODE buttons CHOP and QUAD are pushed in, or by alternate operation if the vertical MODE buttons ALT and QUAD are pushed in. When observing signal faster than 1 msec/div, push the vertical MODE buttons CHOP and QUAD IN. When observing signal slower than 1 msec/div, push the vertical MODE buttons ALT and QUAD IN.

2-5-4 Operation for Enlarging Waveform on the CRT Screen

Waveforms on the CRT screen can be partially magnified timewise (in the horizontal axis direction) for detailed observation by any of the following three methods.

- To use a fast sweep tate
- To use the x10 MAG function to magnify.
- To use the delayed sweep function to magnify.

These are explained in detailed below.

Using a fast sweep rate

Use a fast sweep rate to magnify the leading end of the waveform on the screen timewise. If the center part or tailing end of the waveform is magnified by using a fast sweep rated, those parts will go out of the CRT screen. In such a case, use the x10 MAG function to magnify the waveform.

Magnifying waveforms by x10 MAG

This method is mainly used to magnify the center part or tailing end of waveforms timewise.

Move the desired part to the center of the CRT screen with the horizontal POSITION control, and pull the FINE (PULL x10 MAG) knob so the desired part is magnified 10 times in the horizontal direction. The trace length at this time is approximately 10 divisions on the CRT screen, but is actually increased to approximately 100 divisions, and can be observed from end to end with the horizontal POSITION and FINE controls.

This method is simple, but magnification is limited to 10 times. The sweep rate to be used for extended observation is the value indicated by the TIME/DIV switch multiplied by 1/10.

Thus, the fastest sweep rate can be extended to 5 nsec/div.

Extending waveform by delayed sweep

The method of magnifying waveform in above paragraph is simple. It can increases the displayed sweep speed by 10 times, but it is limited to 10 times.

The method of magnifying waveform by delayed sweep can magnify every part of the waveform displayed magnifier ratio between A sweep and B sweep is determined by

$$\frac{\text{A TIME/DIV (sec/div)}}{\text{B TIME/DIV (sec/div)}}$$

but this method is limited frequency of input signal. If an input signal has a high frequency and if the A TIME/DIV switch is at the fastest speed before magnification, the waveform cannot be magnified any more.

Therefore, delayed sweep magnified is suitable for enlarging the desired part of an input signal that has a relatively low frequency.

Delayed sweep magnification comes in continuous delay and trigger delay as described below.

Continuous Delay: Operation for continuous delay is as follows:

1. Select the HORIZ DISPLAY mode A , apply an input signal, and triggering.
2. Turn the B TIME/DIV switch to a position faster than the A TIME/DIV switch.
3. Select the B-sweep SOURCE mode RUNS AFTER DELAY.
4. Select the HORIZ DISPLAY mode A INTEN'

If the DELAY TIME MULT dial is turned clockwise after taking the above steps, a particularly intensity maduration part appears as shown in the upper waveform of Figure 2-19, and moves continuously from left to right. If this intensity moduration part is moved to a position where is measured, and if the HORIZ DISPLAY mode B (DLY'D) is selected, that part can be magnified fully on the CRT screen as shown in the lower waveform of Figure 2-19.

Use the B TIME/DIV switch for selecting a B (DLY'D) sweep rate. The magnification ratio increases as the sweep rate is increased. If the magnification ratio is raised so much delay jitter showns, making waveform observation difficult. Thus, there are limitations on magnified waveform observation by countinuous delay due to delay jitter. In such a case, use the trigger delay described below if a higher magnification ratio is desired.

The delay time of the magnified part can be calculated by multiplying the indicated value of A TIME/DIV switch by the indicated value of the DELAY TIME MULT dial.
Trigger Delay: Trigger delay can be selected if the B-sweep SOURCE switch is set to CH 1, CH 2 or CH 4 (if a trigger signal is applied to CH 4). Delayed magnification can be made by B-sweep triggering and performing the same steps of operation as those of continuous delay.

Figure 2-19. Magnification by Continuous Delay

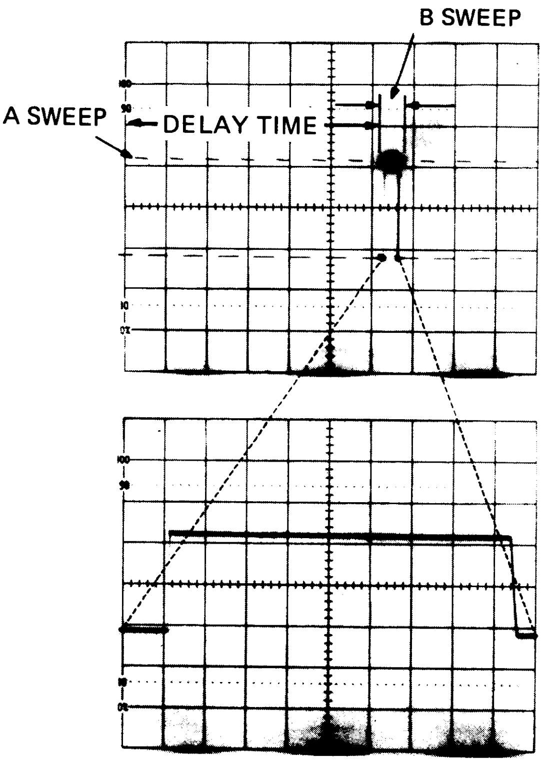

The magnified part (B-sweep) in trigger delay starts at a trigger point subsequent to the delay time selected with the DELAY TIME MULT dial. The trigger point moves as DELAY TIME MULT is turned.

If DELAY TIME MULT is turned during a B (DLY'D) sweep, the waveform may appear still, but actually you are watching the part selected in the A INTEN sweep mode.

B-Sweep Trigger

The B-sweep trigger controls include B-sweep COUPLING SOURCE, and LEVEL.

The LEVEL and COUPLING (except for LF REJ, TV—V) functions and operations are the same as the A-sweep LEVEL and COUPLING functions and operations. The SOURCE button is used for selecting a trigger signal. RUNS AFTER DELAY is for continuous delay; and CH 1, CH 2 and CH 4 (external trigger function of the conventional oscilloscope) are for trigger delay. If CH 4 is selected, apply a trigger signal to CH 4 INPUT. If CH 1, CH 2 is selected, the same function as in the A-sweep mode is performed.

2-5-5 Operation for ALT Sweep

In the ALT sweep mode, an A INTEN sweep and a delayed B-sweep occur alternately. Thus, a non-magnified part and a magnified part can be simultaneously observed. The operation procedure is as follows:

1. Select the HORIZ DISPLAY mode A, apply an input signal, and synchronize.
2. Set B TIME/DIV switch to a position faster than that of A TIME/DIV switch.
3. Set the B-sweep SOURCE switch to RUNS AFTER DELAY.
4. Set the HORIZ DISPLAY switch to ALT.
5. Move the B-sweep waveform to the position where the A-sweep waveform is measured, using the DELAY TIME MULT dial.
6. Turn the B TIME/DIV switch, and magnify.
7. Move the B-sweep waveform (magnified waveform) to a point where it is easy to observe as shown in Figure 2-18, using TRACE SEPARATION.

Note. If TRACE SEPERATION is turned fully counterclockwise, the A-sweep waveform and B-sweep (magnified) waveform are completely double. When it is turned fully clockwise, the B-waveform moves about 4 divisions or more above the A-sweep waveform.

The delay time of the magnified part can be easily obtained in the same sweep by the formula shown in the above paragraph on waveform magnification by delay. If the magnification ratio is increased, jitter shows on the CRT screen. In that case, set the SOURCE button to other than RUNS AFTER DELAY for trigger delay as in B (DLY'D) sweep.

2-5-6 Operation for Observing Television Composite Video Signal Waveforms

The SS-5710D has a television synchronizing separator circuit so that television and other composite video signal waveforms can be displayed. The operation procedure is as follows.

Figure 2-20. TRACE SEPARATION Adjustment

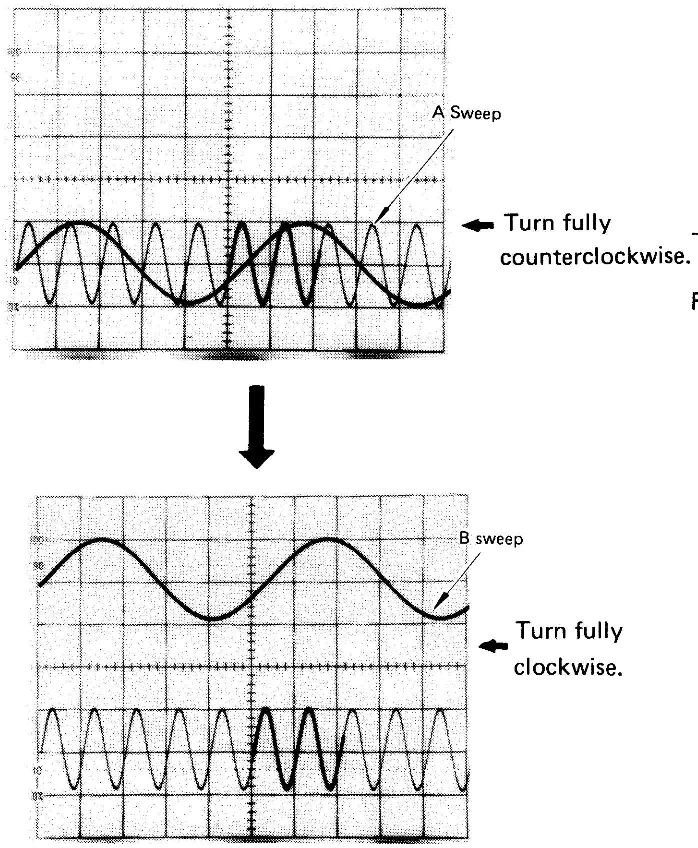

Observation by Normal Sweep

1. Set the controls as follows:

HORIZ DISPLAY	A
Vertical MODE	CH 1 or CH 2 (whichever a signal is applied to)
COUPLING	TV-V (when observing a V signal) TV-H (when observing an H signal), or
SOURCE (internal trigger)	CH 1 or CH 2 (whichever a signal is applied to) or

Figure 2-21. Where H Trigger Signal is Positive

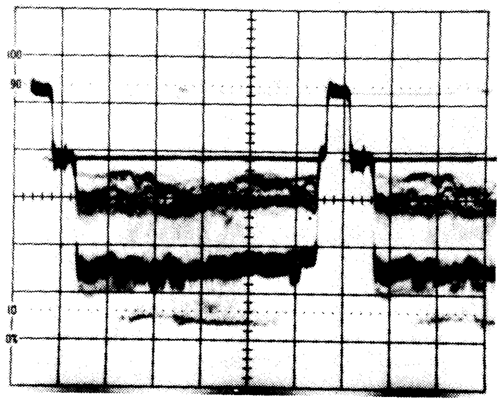

Figure 2-22. Where V Trigger Signal is Positive

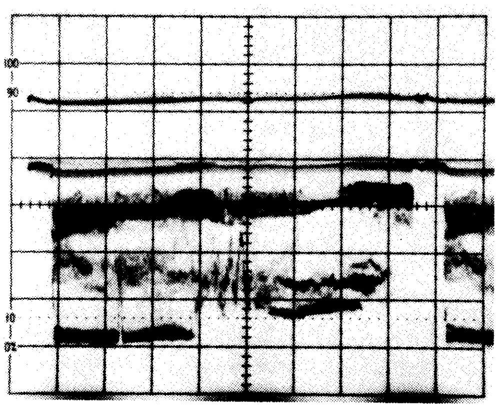

	NORM
(external trigger)	CH 3 (Apply a signal to CH 3 INPUT.)

2. Apply the composite signal to be measured to CH 1. CH 2 or CH 3.
3. Adjust so that the composite video signal waveform has an amplitude of 1 division or more (30% of the trigger signal component) on the screen.
4. Selects the horizontal mode AUTO or NORM.
5. Turns the SLOPE control to the −position if the trigger signal component of the composite video signal measured is positive-going; or to the +position if it is negative-going, (Refer to Figure 2-21 and 2-22.)
6. Turn the TIME/DIV switch to display the desired part of the signal on the screen.

Magnified Observation by Delayed Sweep

1. In continuation of the above steps, set the HORIZ DISPALY switch to A INTEN.
2. Turn A TIME/DIV switch to 2 msec/div.
3. When observing by continuous delay, set the B-sweep SOURCE button to RUNS AFTER DELAY; or when trigger delay is desired, set it to CH 1 or CH 2 or CH 4. (Apply the trigger signal to CH 4 INPUT if CH 4 is selected.)
4. Select the desired part to be magnified, using DELAY TIME MULT.
5. Set the HORIZ DISPLAY switch to B (DLY'D), and select the desired magnification ratio with B TIME/DIV switch.
6. The SS-5710D has no 1st-2nd field switching function, but it can be accomplished with an accuracy of about 50% by shifting the AC-DC button or by pushing or pulling the SLOPE control.

2-5-7 Operation for Single Sweep

In observing discharge waveforms or fast-speed transient phenomena, such as the chatterings of an operating relay, the waveforms are displayed one upon another. If waveform is displayed at a slower sweep rate, transient phenomena can not be observed in detail. If the signale sweep function is used for obsering such phenomena, the transient phenomena can be observed without being double and photographed. (See Figure 2-23.)

The basic operation procedure for single sweep using a calibrate or voltage is described below.

1. Select the HORIZ DISPLAY mode A and the horizontal mode NORM.
2. Using one of the supplied probes, apply a CAL 0.3 V to INPUT, set VOLTS/DIV to 5 mV and synchronize.
3. Select the horizontal mode SINGLE, and push the SINGLE/RESET button, and confirm that only a single sweep takes place.
4. Disconnect the input signal, and push the SINGLE/RESET button. Confirm that the READY lamp on the right lights.

If the READY lamp lights after these steps, the oscilloscope is in a sweep standby state, ready to make a single sweep if a trigger signal is applied. (The oscilloscope may not be in a standby state if the LEVEL control is at some

Figure 2-23. Example of Repeated Sweep and Single Sweep Waveforms

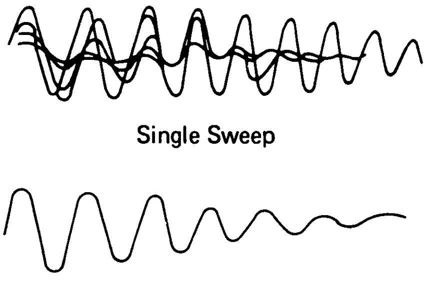

Figure 2-24. Lissajou's Figure of Sine Wave

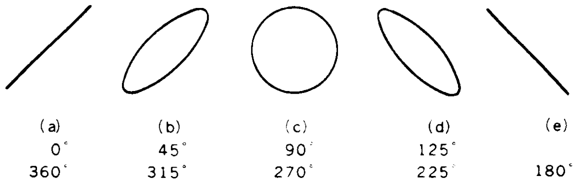

point near the center. If so, turn the LEVEL control slightly counterclockwise or clockwise.) If a transient signal is applied to the oscilloscope, it sweeps only once, display the correct waveform.

The single sweep function is effective also in the A INTEN and B (DLY'D) sweep modes. If an external trigger signal is applied and the same operations as in the internal trigger mode are taken, a single sweep is also available. A dual-trace simultaneous single sweep can be mode in the CHOP mode, but, not in the ALT mode.

2-5-8 Operation for Use as X-Y Scope

By performing operations for use as an X-Y scope, phase differences, Lissajours' figures of various frequency ratios, and hysteresis curves can be observed.

The SS-5710D operates as an X-Y scope, and spot appear nearly at the center of the screen when the HORIZ DISPLAY mode X-Y is selected.

If signals are applied to CH 1 and CH 2 INPUTs, the signal applied to CH 1 drives the horizontal axis (X) and the signal applied to CH 2 drives the vertical (Y) axis, thus describing a Lissajous' figure.

The X-axis deflection factor is adjusted with the CH 1 VOLTS/DIV switch and its VARIABLE control; and the Y-axis deflection factor with the CH 2 VOLTS/DIV switch control and its VARIABLE contol. If the VARIABLE controls are set to the CAL position, the deflection factors are as indicated by the VOLTS/DIV switches,. Vertical position can be adjusted with the CH 2 ↕ POSITION control, and horizontal position with the ◄—► POSITION control and its FINE controls

Figure 2-24 and 2-25 show Lissajou's figure of measuring sine waves and different frequencies. As shown in these figures, varied waveforms are displayed depending on phase difference and frequency ratio. These waveforms are observed still.

Figure 2-26 shows examples Lissajou's figure of difference waveforms.

2-5-9 Z Axis System

In addition to the vertical (Y) axis and horizontal (X) axis, there is also a Z axis (which modulates intensity but does not affect the waveform displayed) for displaying electrical phenomena. The SS-5710D has Z AXIS INPUT on the rear panel which is fed to the CRT circuit to modulate the intensity of waveform displayed on the CRT screen.

If an input voltage of 0.5 Vp-p or more is applied, the intensity is modulated. A negative input signal increases the intensity, and a positive input signal decreases it. The frequency range is from DC to 3 MHz, and the maximum input it voltage is 50 V (DC + peak AC.)

A time reference for the waveform displayed can be obtained by applying a time marker to Z AXIS INPUT. Sweep rate can be calibrated by use of the time marker, even if observing input signal at uncalibrated sweep rate.

Figure 2-25. Lissajou's Figures of Various Frequency Ratios

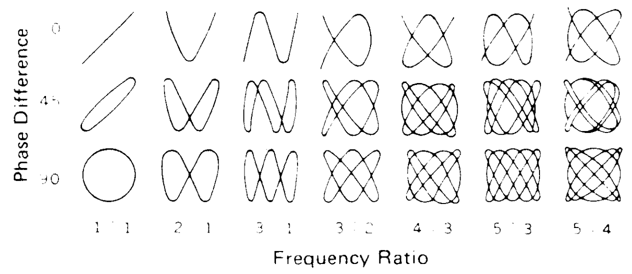

Figure 2-26. Lissajou's Figure of Different Waveforms ——

(Frequency ratio 1 : 1)

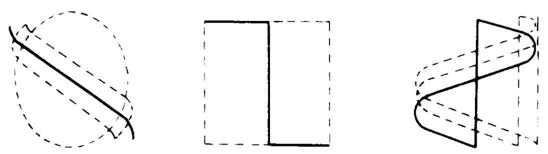

(a) Sine wave and triangle wave (b) Sine wave and square wave (c) Sine wave and sawtooth wave

2-6 OPERATION OF COUNTER

This section explains the use of the counter when for measurement in conjunction with the oscilloscope.

2-6-1 Operation for Frequency Measurement

The following explains frequency measurement operation and the internal operation checks associated with it.

Before beginning measurement, performance of the counter should be checked using the iternal operation check function.

Internal Operation Checks

1. Switch power ON.
2. Push the CHECK switch and check that the base oscillator frequency of 10,000 MHz is indicated on the count display for each range as shown in Table 2-3.
3. If the count display appears as shown in Table 2-3, all circuits (except input circuits) are operating normally.

Table 2-3

Range	Count	Unit
0.01	10000.0 ±1	kHx
0.1	10000.00 ± 1	kHz
1	10000.00 ± 1	kHz
10	Δ00000.000 ±1	kHz

Reference: Δ 0.000.0000

indicates that the maximum number of digits on the scale has been exceeded.

Measuring the Frequency of a Signal Input to the Oscilloscope

1. Connect the signal to be measured to the CH1 INPUT.
2. Set the vertical MODE to CH1 and HORIZ DISPLAY to A.
3. Select A sweep COUPLING and CH1 VOLTS/DIV ranges to suit the input signal.
4. Set A sweep SOURCE to CH1 and horizontal MODE to AUTO or NORM.
5. Adjust the A sweep LEVEL to set the input signal sync range in the center for accurate synchronization (unstable sync will result in an unstable count).
6. Set EXT-INT to INT and FREQ.
   The above operation will result in the signal to be measured being input to CH1 INPUT and the frequency counted and displayed.
7. LF-HF and range are set to suit the signal to be measured. Select the range so that it has the required number of digits for measurement.
8. The LF-HF switch permits measurement over a range of 0.1 Hz to 10 MHz at LF, and over a range of 1 MHz to 100 MHz at HF.

Measuring the Frequency of a Signal Input to the EXT INPUT 1 M ~ 150 MHz Terminal

1. Switch power ON. No other operation is required.
2. Input the signal to be measured to the EXT INPUT 1M ~150 MHz terminal.
3. Set EXT-INT to INT and FREQ.
4. Set LF-HF to HF and set the range to suit the signal to be measured. Select the range so that it has the required number of digits for measurement.
   Frequencies between 1 MHz and 150 MHz may be input to the EXT INPUT terminal.

2-6-2 Operation for Period Measurement

Measuring the Period of a Signal Input to the Oscilloscope

1. Connect the signal to be measured to the CH1 INPUT.
2. Set the vertical MODE to CH1 and HORIZ DISPLAY to A.
3. Select A sweep COUPLING and CH1 VOLTS/DIV ranges to suit the input signal.
4. Set A sweep SOURCE to CH1 and horizontal MODE to AUTO or NORM.
5. Adjust the A sweep LEVEL to set the input signal sync range in the center for accurate synchronization (unstable sync will result in and unstable count).
6. Set EXT-INT to INT and PERIOD.
   The above operation will result in the signal to be measured being input to CH1 INPUT and the period counted and displayed.
7. LF-HF and range are set to suit the signal to be meas-

ured. Select the range so that it has the required number of digits for measurement.

8. The LF-HF switch permits measurement over a range of 0.5 μsec to 10 nsec at LF, and over a range of 10 nsec to 1 μsec at HF.

Table 2-4

Range	1	10	100	1000
Count range	0.1μS ±1	0.10 μ S ±1	0.100 μ S ± 1	0.1000 μS ±1

measuring the Period of a Signal Input to the EXT INPUT 1M ~ 150 MHz Terminal

1. Switch power ON. No other operation is required.
2. Input the signal to be measured to the EXT INPUT 1M ~ 150 MHz terminal.
3. Set EXT-INT to INT and LF-HF toHF and PERIOD.
4. Set the range to suit the signal to be measured. Select the range so that it has the required number of digits for measurement.
5. Frequencies between 1 MHz and 150 MHz may be input to the EXT INPUT terminal.

> *Caution*
>
> *When LF-HF is set to LF and the signal being measured has a period of between 0.2 μsec and 0.4 μsec, the unit display will blink to indicate an alarm condition. In this case a longer period should be measured.*

2-6-3 Operation for Time interval Measurement

Display the input signal on the CRT, use brightness modulation to mark the portion to be measured, and then directly read the interval.

1. Connect the signal to be measured to the CH1 INPUT.
2. Set the vertical MODE to CH1 and HORIZ DISPLAY to A.
3. Select A sweep COUPLING and CH1 VOLTS/DIV ranges to suit the input signal.
4. Set A sweep SOURCE to CH1 and horizontal MODE to AUTO or NORM.
5. Adjust the A sweep LEVEL to set the input signal sync range in the center for accurate synchronization. Set A TIME/DIV to a range permitting the most convenient measurement.
6. Set TIME INT for the counter.
7. Use the START knob to position the start point for brightness modulation of the portion of the waveform to be measured on the CRT.
8. Use the STOP knob to position the stop point for brightness modulation.
9. Indicate the interval for the brightness modulated portion on the display.

> *Caution*
>
> *If the brightness modulated portion is made too narrow (0.2 μsec to 0.4 μsec) with the START or STOP cursor, the unit display will blink to indicate an alarm condition. In this case a longer period should be set.*

2-6-4 Operation for Delay Time Measurement

Displays the time between A sweep start point and B sweep start point (ie., delay time) when the delay waveform is expanded.

The signal to be measured is input to either CH1 or CH2 input and continuous delay or synchronized delay added (see "CRT Waveform Expansion" in the section on signal observation applications).

1. Set DELAY TIME. No other counter switches need be set.
2. Set HORIZ DISPLAY to A INTEN and use DELAY TIME MULT to set B sweep to the position to be measured. The delay time is indicated on the display.
3. The delay time display also includes continuous delay. synchronous delay and B (DLAY'D).

Caution

When delay time is set to between 0.2 μsec and 0.4 μsec, the unit display will blink to indicate an alarm condition. In this case a longer delay time should be measured.

2-6-5 Operation for A EVENT IN DELAY TIME Measurement

Displays the number of A sweep trigger signals between A Sweep start point and B sweep start point when the delay waveform is expanded.

Oscilloscope operation is the same as that described in 2-6-4 "Dealy Time Measurement".

1. Set EXT-INT to INT and LF-HF to LF and A EVENT IN D TIME.
2. Set HORIZ DISPLAY to A INTEN. The number of A sweep trigger signals between A sweep start point and B sweep start point will then be indicated on the display.
3. The display of the number of trigger pulses also includes continuous delay, synchronous delay and B (DLY'D).

Caution

The count may stop when the TIME/DIV range is moved from fast to slow. In this case, push the RESET switch to return to normal count.

2-7 OPERATION OF DIGITAL MULTIMETER

This section explains the use of the digital multimeter for measurement of DC • AC voltage, resistance, DC • AC current.

Connect the lead to the LO-HI terminal and switch power ON.

2-7-1 Operation for DC-AC Voltage Measurement

1. Set the function switch to V.
2. When measuring AC voltage, set AC/DC to AC, and when measuring DC voltage, set it to DC.
3. Set the range to a value swuited to the voltage to be measured (200 mV, 2 V, 20 V, 200 V, 2000 V).
4. The measured value unit will be indicated by the LED lit at the right of the display.
5. When the selected range is exceeded, the highest digit will be displayed as either 1 or —1.

2-7-2 Operation for Resistance Measurement

1. Set the function switch to Ω .
2. Set the range to a value suited to the resistor to be measured (200Ω , 2 k Ω, 20 k Ω, 2000 k Ωand 20 MΩ).
3. The measured value unit will be indicated by the LED lit at the right of the display.
4. When the selected range is exceeded, the highest digit will be displayed as either 1 or —1.

2-7-3 Operation for DC • AC Current Measurement

1. Set the function switch to A.
2. When measuring AC current, set AC/DC to AC, and when measuring DC current, set it to DC.
3. Set the range to a value suited to the current to be measured (2 mA, 20 mA, 200 mA and 2000 mA).
4. The measured value unit will be indicated by the LED lit at the right of the display.
5. When the selected range is exceeded, the highest digit will be displayed as either 1 or —1.

Notes

Section 3

Measuring Instructions

3-1 ADJUSTMENTS NECESSARY BEFORE MEASUREMENT

It may be necessary to adjust the adjusters on the front panel and bottom before attempting measurements in order to assure accuracy of measurements. In case of measuring with a probe, its phase adjustment is necessary. Whichever the case, the adjusting screwdriver (supplied as an accessory to the probes) may be used for adjustment purposes.

About 30 minutes of warmup is recommended for stabilizing operation before adjusting the controls and probe phase.

3-1-1 TRACE ROTATION Adjustment

Trace may become not parallel to the graticule lines on the CRT screen due to geomagnetic effect or other cause.

If that occurs, display a trace on the CRT screen, move it to the center of the screen with POSITION, and adjust the trace parallel to the graticule lines with TRACE ROTATION. Before making this adjustment, install the SS-5710D in the normal place of use for measurement.

3-1-2 GAIN Adjustment (CH 1, CH 2)

Vertical deflection check and adjustment are necessary to assure accuracy of voltage measurements.

The check and adjustment method is as follows. Set VOLTS/DIV switch to 5 mV, and connect INPUT to the CAL 0.3 V output terminal with an accessory probe. Check that the amplitude of the waveform displayed on the CRT screen is 6 divisions. If it is not rating, adjust it with the GAIN. (See Figure 2-7.)

3-1-3 x5 BAL Adjustment (CH 1, CH 2)

If ambient temperature fluctuations are variable, the vertical position of a trace can shift when ↕ POSITION is pushed or pulled.

If that occurs, adjust the X5 BAL while pushing and pulling ↕ POSITION so that the trace will not deviate from its vertical position. (See Figure 2-7.)

3-1-4 VARIABLE BAL Adjustment (CH 1, CH 2)

If ambient temperature fluctuations are variable, the vertical position of a trace may shift when the vertical deflection VARIABLE control is turned.

If that occurs, adjust the VARIABLE BAL while turning the VARIABLE control so that the trace will not deviate from its vertical position. (See Figure 2-7.)

3-1-5 Probe Phase Adjustment

10 : 1 Passive probe phase adjustment

The following probes can be used for the SS-5710D: Type SS-0011 (1.5 m long) with an attenuation ratio of 10 : 1; SS-0001 (1 m long), SS-0002 (1.5 m long), and SS-0003 (2 m long), the later three with an attenuation ratio of 1 : 1. (Those probes with an attenuation ratio of 1 : 1 are optional.)

A mismatched probe phase can result in measuring the wrong waveform. Be sure to correctly adjust the probe before use.

First, set VOLTS/DIV to 5 mV., connect the probe to INPUT and the CAL 0.3 V output terminal so that a calibration voltage waveform with an amplitude of 6 divisions is displayed on the CRT screen.

Next, turn the variable capacitor of the probe. The waveform changes as shown in Figure 3-1 b or c. Adjust the variable capacitor correctly until the waveform is as shown in Figure 3-1 a.

Current probe sensitivity check

When using a current probe for measurement, check its sensitivity beforehand.

Read the instruction manual for the current probe for the checking procedure. The SS-5710D has the CAL 10mA current loop termianl on the rear panel, where a square wave current of 10 mA flows in the arrow direction.

3-2 MEASURING METHODES

3-2-1 Voltage Measurement

Quantitative Measurement

The quantitative measurement of voltage can be made by setting the VOLTS/DIV VARIABLE control to the CAL position. The measured value can be calculated by Equation (3-1)or (3-2).

Figure 3-1. Probe phase waveforms

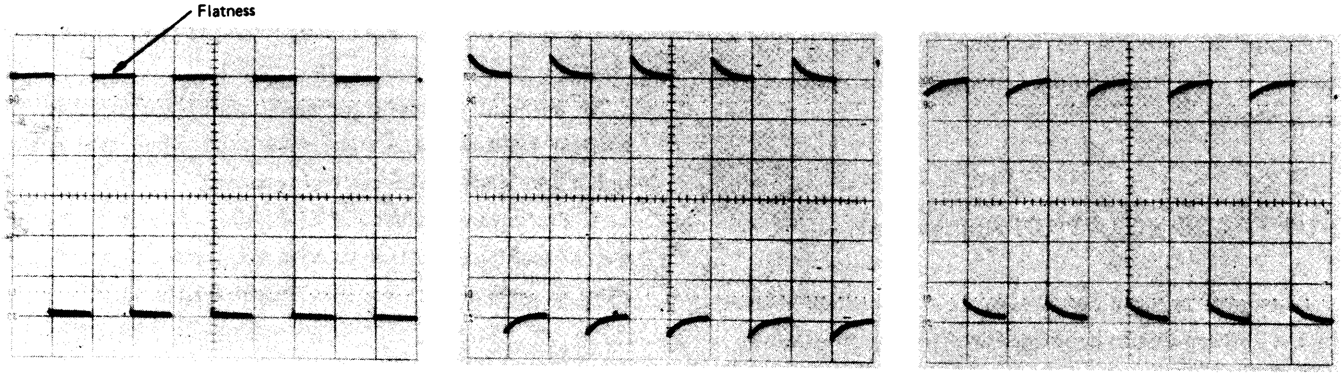

a. Correct compensation

b. Excessive compensation

c. Insufficent compensation

Figure 3-2. DC Voltage Measurement

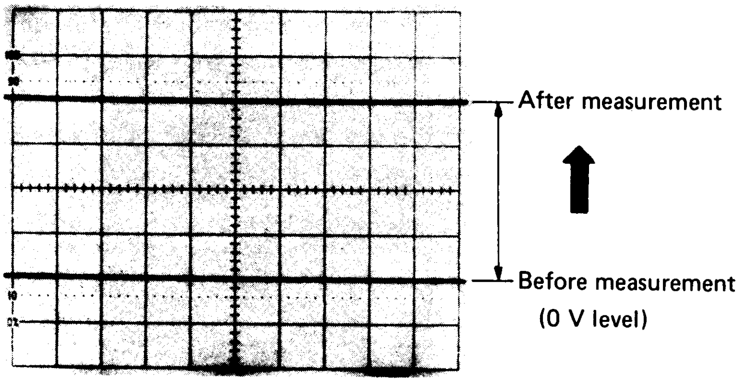

Figure 3-3. AC voltage measurement

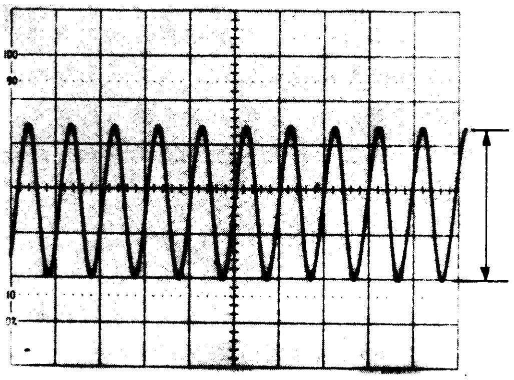

a. Measurement with the x1 position of the probe;

$$\text{Voltage (V)} = \text{VOLTS/DIV setting value (V/div)} \times \text{Displayed amplitude of input signal (div)} \quad \ldots\ldots (3\text{-}1)$$

b. Measurement with the x10 position of the probe;

$$\text{Voltage (V)} = \text{VOLTS/DIV setting value (V/div)} \times \text{Displayed amplitude of input signal (div)} \times 10 \quad \ldots\ldots (3\text{-}2)$$

DC Voltage Measurement

This instrument functions as a high input resistance, high sensitivity, quick response DC volt meter in order to measure DC voltage. Measurement procedure is as follows:

1. Set the sweep MODE switch to AUTO. and select a sweep rate so that the trace may not flicker.
2. Set the AC-GND-DC switch to GND. The vertical position of the trace in this case is used as 0-volt reference line as shown in Figure. 3-2. Adjust the vertical POSITION control in order to place the trace exctly on a horizontal graticule, which facilitates the reading of signal voltage.
3. Set the AC-GND-DC switch to DC, and apply the voltage to be measured to the input connector. The vertical diaplacement of the trace gives the voltage amplitude of the signal. When the trace shifts upward, the measured voltage is positive with regard to the ground potential. When the trace shifts downward, the voltage is negative. The voltage can be obtained by Equation (3-1) or (3-2).

AC Voltage Measurement

The measurement of the voltage waveform is performed as follows; Set the VOLTS/DIV switch in order to obtain the amplitude for easy reading, read the amplitude as shown in Figure 3-3 and calculate by Equation (3-1) or (3-2).

When the waveform superimposed on DC current is measured, set the AC-GND-DC switch to DC in order to measure the value including DC component, or set this switch to AC in order to measure AC component only.

The measured value by means of this procedure is peak value (Vp-p). Effective value (Vrms) of a sine wave signal can be given by Equation (3-3.)

$$\text{Effective voltage (V rms)} = \frac{\text{Peak voltage (V p-p)}}{2\sqrt{2}} \quad \ldots (3\text{-}3)$$

3-2-2 Current Measurement

Phanomena that can be observed by direct input application to the oscilloscope are voltage phenomena. All electrical phenomena other than voltage phenomena, such as mechanical vibrations and all others, require conversion into voltages for applying to INPUT.

In current measurements, a resistor of a known value is added to the circuit to be measured, and voltage variations at both ends of the resistor are observed on the CRT screen of the oscilloscope. The current value is calculated from the relationship V = IR. The resistor to be added to the circuit must have a resistance within a range in which the circuit will not change in operating condition. In case a resistor cannot be added to the circuit to be measured for reasons of operation, a current probe may be used for measuring currents without disconnecting the circuit. As shown in Figure 3-4, the current at the measuring point is detected by the core and secondary winding, and is applied to the vertical deflection system of the oscilloscope.

When measuring a small current, the output of the secondary winding is amplified and then applied. When measuring a large current, a shunt is inserted to apply a divided current. Otherwise, the core will be saturated. This method, however, is subject to limitation in frequency bandwidth. That is, it is unusable for high-frequency signals. if the circuit is ungrounded, a single inptut cannot assure

Figure 3-4. Current waveform measurement with current probe

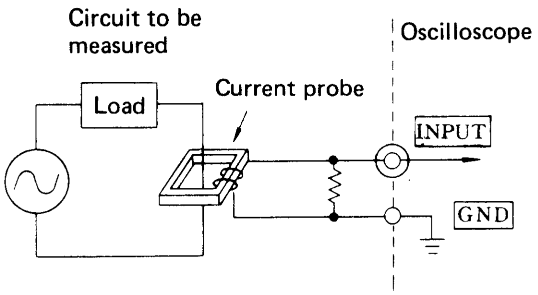

accurate current measurement. That is, a differential input amplifier is necessary in that case. As mentioned in the paragraph on Operation for observation of the Sum of Two Signals or their Differnce, the SS-5710 can be used for differentical observation. This capability may be used in the following way. Select the vertical mode ADD, and CH 2 POLAR INV. Connect a probe to CH 1 and CH2 INPUTs, and its tips to both ends of the resistor inserted. Turn the VOLTS/DIV switches for CH 1 and CH 2 to the same position. The waveforms for both ends of the resistor i e., current waveforms, can now be observed.

3-2-3 Time Measurement

The time interval of two points on a signal waveform can be calculated as follows: Set the TIME/DIV VARIABLE control to CAL. read the setting values of the TIME/DIV and x5 MAG switches and calculate the time by Equation (3-4).

Time (s) = TIME/DIV setting value (s/div)
x Length corresponding to the time to be measured (div)
x Reciprocal number of x5 MAG setting value. . . . . (3-4)

Where, the reciprocal number of the x5 MAG setting value is 1 when the sweep is not magnified, and 1/5 when the sweep is magnified.

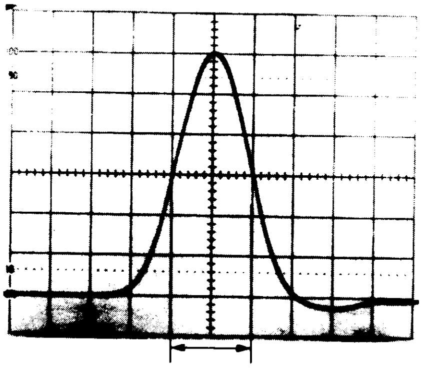

Figure 3-5. Pulsewidth measurement

Pulsewidth Measurement

The basic pulsewidth measurement procedure is as follows:

1. Display the pulse waveform vertically so that the distance between the top part of the pulse waveform and the horizontal center line of the graticule may be equal to the distance between the bottom part of the pulse and the horizontal center line as shown in Figure 3-4.
2. Set TIME/DIV switch in order to make the easy observation of the signal.
3. Read the distance between centers of rising and falling edges, i.e., the distance between two points at which pulse edges cross the horizontal center line of the graticule. Calculate the pulsewidth by Equation (3-4).

Rise (or Fall) Time Measurement

The rise (or fall) time measurement of the pulses is obtained as follows.

1. Display the pulse waveform vertically and horizontally in the same manner as for the pulsewidth measurement procedure.
2. Turn the horizontal POSITION control in order to set the upper 10% point of the waveform on the vertical center line of the graticule. (In Figure 3-5, the upper 10% point is 0.4 division below the top of the pulse since the displayed amplitude is 4 divisions.) Read the distance T 1 between the vertical center line and the point at which the rising (or falling) edge crosses the

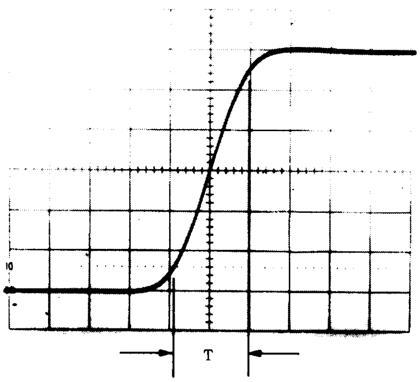

Figure 3-6. Rise (or fall) time measurement

horizontal center line.

3. Shift and set the lower 10% point of the waveform to the vertical center line of the graticule as shown by the dotted line in Figure 3-5. Read the distance T2 between the vertical center line and the point at which the rising (or falling) edge crosses the horizontal center line.
4. Calculate the rise (or fall) time by substituting the sum of T 1 and T2 for Equation (3-4).

3-2-4 Frequency Measurement

Of the frequency measurement procedure, there are the following methods.

The first method: Calculate the one-cycle time (interval) of the input signal by Equation (3-4) as shown in Figure 3-6, and obtain th frequency by Equation (3-5).

$$\text{Frequency (Hz)} = \frac{1\ (c)}{\text{Period (s)}} \ldots\ldots\ldots\ldots\ldots (3\text{-}5)$$

The second method: Count the repetition number N per 10 divisions in the viewing area, and calculate the frequency by Equation (3-6).

$$\text{Frequency (Hz)} = \frac{N\ (c)}{\text{TIME/DIV setting value (s/div)} \times 10\ \text{(div)}} \ldots (3\text{-}6)$$

Figure 3-7. Frequency measurement (1)

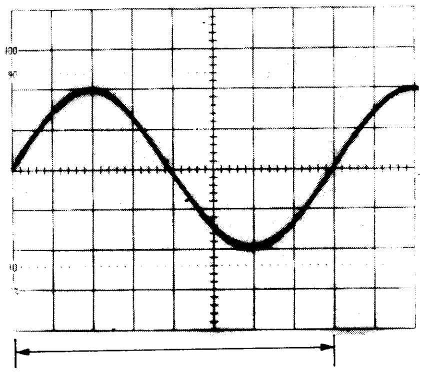

When N is large (30 to 50), the second method can give a higher accuracy level than that obtained with the first method. This accuracy is approximately equal to the rated accuracy of sweep rate. However, when N is small, the count below decimal point becomes very ambiguous, which results in considerable error.

For the measurement of comparatively low frequencies having a simple pattern such as sine wave, square wave, triangle wave, and sawtooth wave, measurement with high accuracy can be effected by the follwing method: Operate the oscilloscope as an X-Y scope, make the Lissajou's pattern by applying the signal of which frequency is known, and read the necessay value.

3-2-5 Phase Difference Measurement

Of the measurement of phase difference between two signals, there are the follwing two methods:

The first one is the Lissajou's pattern method by using the instrument as an X-Y scope. The phase difference of signals can be calculated form the amplitudes A and B of the pattern shown if Figure 3-8 and by Equation (3-7).

$$\text{Phase defference (deg)} = \sin^{-1}\frac{A}{B} \ldots\ldots\ldots\ldots\ldots (3\text{-}7)$$

The second method is an application of dual-trace function Figure 3-9 shows an example of dual-trace display of leading and lagging sine wave signals having the same

Figure 3-8. Frequency measurement (2)

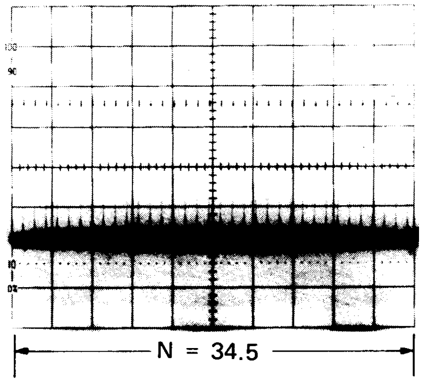

frequency. In this case, the SOURCE switch must be set to a channel which is connected to the leading signal, and set the TIME/DIV switch so that the length of 1-cycle of the displayed sine wave may be 9 divisions.

Then, 1-division graticule represents a waveform phase of 40° (1 cycle $=2\pi=360°$). The phase difference between the two signals can be easily calculated by Equation (3-8).

Figure 3-9 Phase difference measurement using Lissajou's pattern

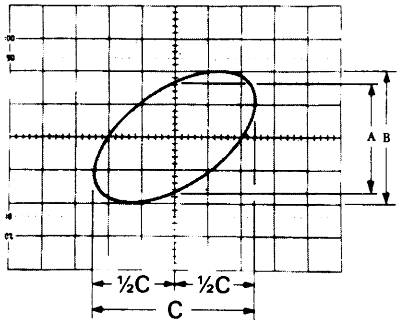

Phase difference (deg)=T (div) x40°. . . . . (3-8)

Where, T is the distance between two points at which the leading and lagging signals cross the horizontal center line of the graticule.

Figure 3-10. Phase difference measurement by dual-trace display

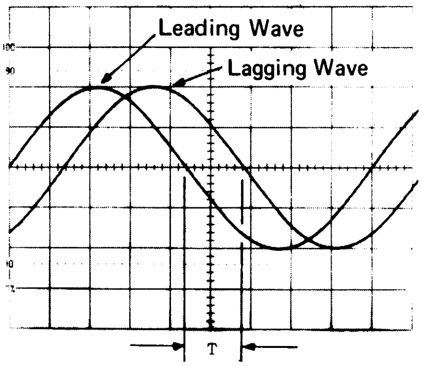

3-3 MEASUREMENT BY COUNTER

This section explains the measurement errors which occur when the counter is used for various measurements.

Refer to the previous section on use of the counter.

3-3-1 Frequency Measurement

Set to FREQ and ensure that the waveform on the screen is correctly synchronized.

Reference

When measuring frequency a reduction in the range, and a consequenct increase in the count time, will increase the number of effective digits in the display, and reduce the measurement error. The maximum accuracy is limited by the accuracy of the base oscillator.

Accurate measurement of low frequencies:

With frequencies which are so low that increasing the count time does not increase the number of effective digits on the display, measure the period and then covert it to a frequency.

Accurate measurement of rapidly varying frequencies:

With frequencies which are vary rapidly, samples should be taken rapidly in succession with reduced count times so that the speed of the repeated counts is increased.

Measurement Errors

Frequency measurement is subject to both "base oscillator accuracy" and "±count" errors.

- Base Oscillator Accuracy Error:

As the frequency measurement count time (gate time) and the period measurement base time (period of internal base pulse) are both produced by dividing the frequency of the base oscillator (crystal oscillator), their accuracy is determined by the accuracy of the base oscillator.

- ±1 Count Error:

Although digital measuring instruments are highly

Figure 3-11. Frequency vs. Error in Frequency and Period Measurements

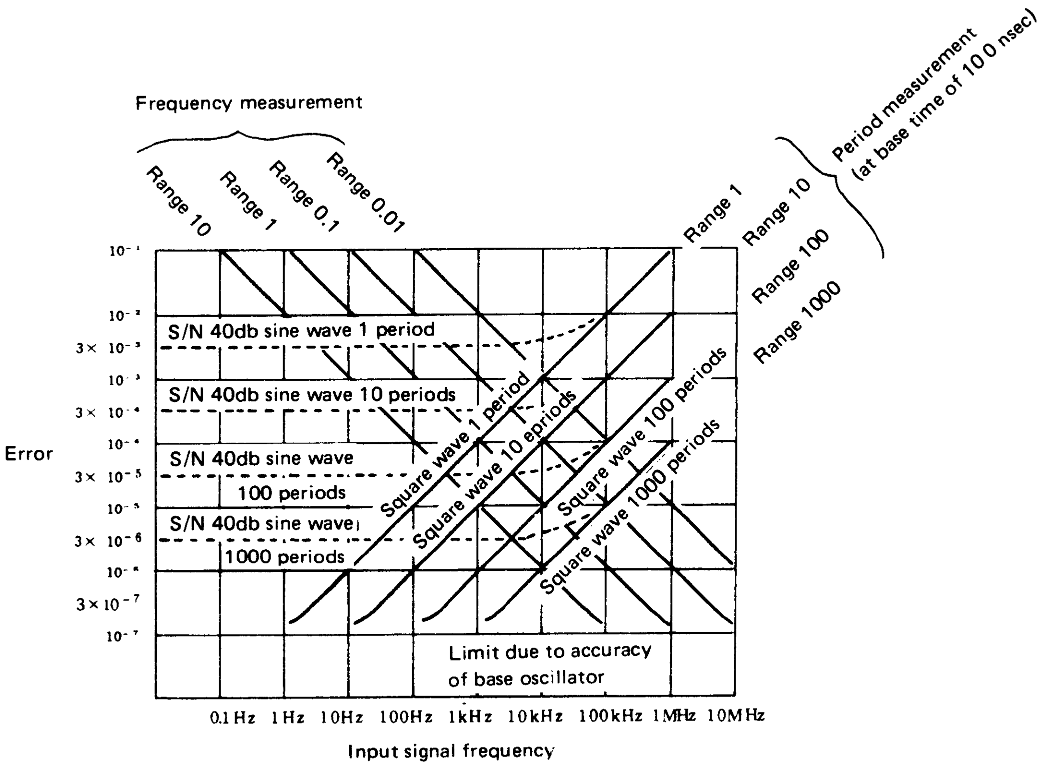

accurate, they are subject to a ±1 count error which occurs when the gate is opened/closed for counting. When for example, a 10.5 Hz input signal is measured with a sec gate time, both 10 count and 11 count will occur so that an error of one count will occur despite the frequency being the same.

The relationship between the frequency of the input signal after correction of the base oscillator (period), and the error occuring, are shown in Figure 3-11.

For example, the ±count error when a 1 kHz frequency is measure with a1 sec gate (range set to 1) is 10^{-3}(1 kHz x 10^{-3}) so that an error of ±1 Hz occurs. In this case 0.999 kHz, 1,000 kHz, or 1.0001 kHz will be displayed. In this case, the accuracy based on the base oscillator accuracy is above the limit and may therefore be ignored.

3-3-2 Period Measurement

Set to PERIOD, all other operation is the same as with frequency measurement.

Measurement Errors

Period measurement is subject to both "bath oscillator accuracy" and "1 base time/number of measured periods" errors. The "base oscillator accuracy" error is as previously described.

- 1 Base Time/Number of Measured Periods Error:

As with frequency measurement, a ±1 count error also occurs with period measurement (termed the 1 base time). With period measurement, this error may be reduced to [1/number of measured periods] by measuring more than one period so that the term "1 base time/number of measured periods" is used.

If, for example, a signal having a period of 1.00 μsec is measured for a base time of 10 n sec 0.99 μsec 1.00 μsec, or 1.01 μsec will be indicated on the display, and the ±1 base time error will be ±1%. When this is averaged over 10 periods, the error will result in the decimal point being moved one digit to the left so that 0.999 μsec, 1.000 μsec, or 1.0001 μsec will be indicated on the display, and the ±1 base time error will be reduced to ±0.1%.

Figure 3-12. Trigger Error

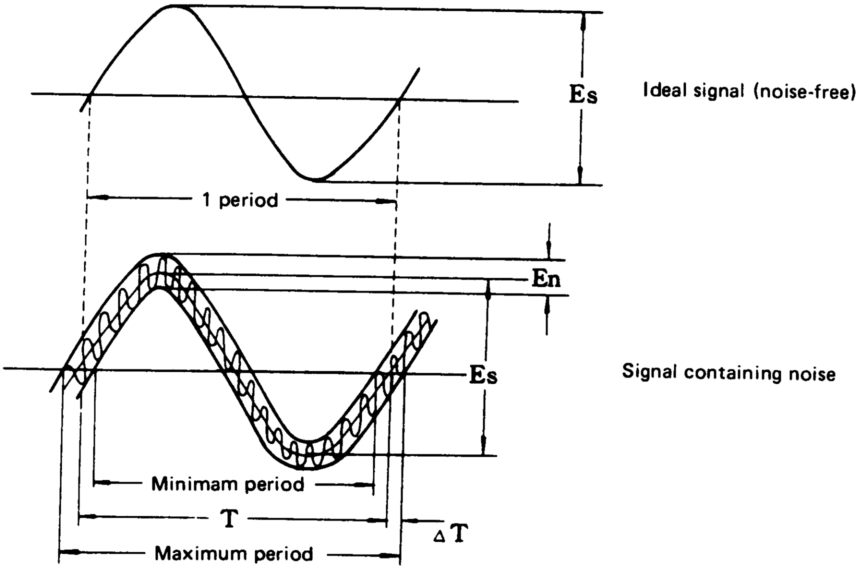

• Trigger Error/Number of Measured Periods Error:

With both period and interval measurement in which the gate is opened/closed with an input signal, gate time errors occur, and measurement accuracy is limited, due to noise superimposed on the input signal waveform, and to internal counter noise. These errors are termed trigger errors and are reduced to 1/1, 1/10, 1/100, 1/1000 according to the number of periods measured.

Trigger errors are described in detail below usinga sine wave as an example. Measurement errors resulting from trigger errors are generally proportional to the noise level, and increases in inverse proportion to the slope of the input signal waveform trigger level. As shown in Figure 3-12, the trigger error with a sine wave is at a minimum when the trigger level is set at the center of the waveform. The relationship between input signal voltage and noise voltage error is shown by the following equation.

$$\frac{2\Delta T}{T} = \frac{1}{\pi} \times \frac{En}{Es}\left(\because \frac{En}{\Delta T} - \frac{2^{\pi}Es}{T}\right)$$

As it is obvious from this equation, the relationship in the case of a sine wave is determined only by the ratio between the signal components Es (noise-free) and the noise En, it is unrelated to frequency. If, for example, the S/N ratio is 40 dB, the error as calculated with this equation will be 0.3%, if it is 60 dB, the error will be 0.03%. If the input signal is passed through a frequency dividing circuit and the average period N measured, the error will be reduced to 1/N as calculated by the following equation.

$$\frac{2\Delta T}{NT} = \frac{1}{\pi} \times \frac{En}{Es} \times \frac{1}{N}$$

Figure 3-13. Time Interval Measurement

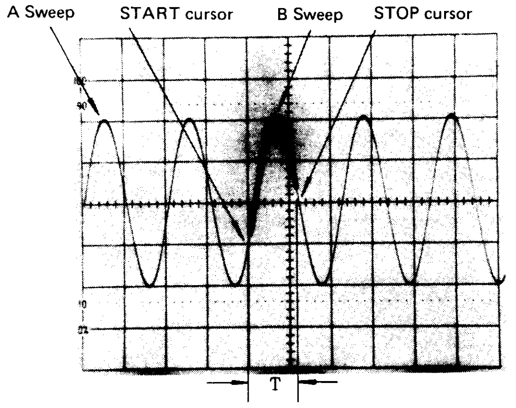

T : Portion to be measured (time)

Measurement of the average of a number of periods is therefore benficial in reducing the effects of noise. For this reason therefore, this counter is designed to permit average measurement of 10,000, and 1000 periods.

Therelationship between input signal frequency (period) and error is shown in Figure 3-11, S/N 40 dB sine waves are shown by dotted lines, and squar waves by the solid siles rising to the right.

If, for example, a 1 kHz square wave input signal is measured for one period the error will be 10^{-5}(ie., 1kHz period x 1000 μsec) x 10^{-5}= 10 nsec, which is an error of ±0.01 μsec). In this case, 999.99 μ sec, 1000.00 μsec, or 1000.01 μsec will be indicated on the display. If the input signal is measured for 10 periods the error will be reduced to 10^{6} (±1 nsec). If a 1 kHz sine wave signal having a S/N

Figure 3-14. Relationship of Measurement Time and Level

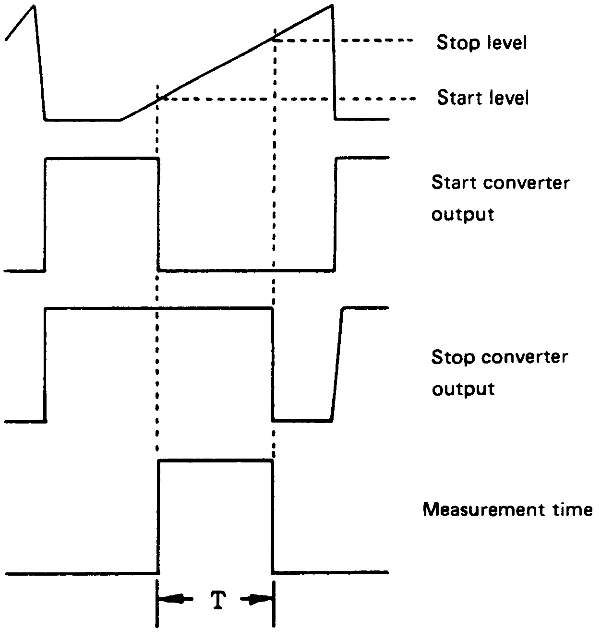

T is brightness modulated on the CRT.

of 40 dB is measured for one period, the error will be 0.301% [the sum of the trigger error (0.3%) and the ±1 base time error (0.001%)]. The error based on the accuracy of the base oscillator will be in accordance with number of digits in the display (as is the case with frequency measurement).

3-3-3 Time Interval Measurement

Input the signal to be measured to the oscilloscope, display it on the CRT, and synchronize it. Set the TIME INT switch and then set the START and STOP cursors at the portion to be measured. (See Figure 3-12.)

The marker brightness modulation portion interval T will be indicated on the display.

Measurement Error

Measurement of interval with the oscilloscope differs from the counter in that any interval on the oscilloscope A sweep waveform may be selected. The error is therefore not that of the measured signal, but is determined by sweep waveform jitter and linearity, and noise etc. emitted from the comparator circuit used for the cursor.

It therefore follows that the error then measuring interval is a maximum of ± (A sweep rate x 10 div x 3/1000) ± 0.2 μsec. This is the error when an interval of 10 div on the screen is measured, the error is a maximum of 0.3% ± 0.2 μ sec, 1 div having maximum of 3% ±0.2 μ sec, and 0.1 div, a maximum of 30% ±0.2 μsec.

As the measurement clock is fixed at 0.1 μ sec, the ±0.2 μ sec item is ±0.2 counts. As this value indicates the accuracy of the cursor, the error will increase to the degree to which the cursor is not aligned with the portion of the waveform to be measured on the CRT. As the two must be aligned by eye, particular care is requred.

Figure 3-14 shows the relationship between the interval to be measured, comparators, and levels.

3-3-4 Delay Time Measurement

Input the signal to be measured to the oscilloscope, set delay operation, set DELAY TIME MULT for the portion to be measured, and then set the counter DELAY TIME switch (See Figure 3-15). The delay time T will appear on the display.

Measurement Error

Delay time is the time between the start points of A sweep and B sweep and is measured by using A and B sweep gate waveforms as start and stop signals respecitively. The measurement error is therefore determined by A and B

Figure 3-15. Delay Time Measurement

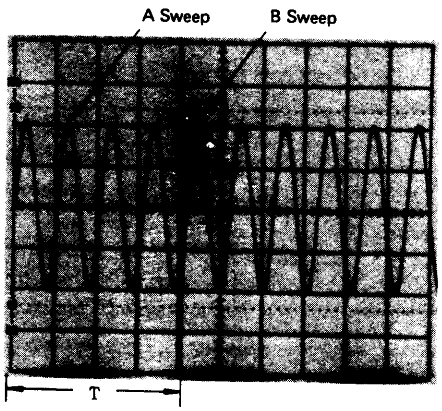

T : Portion to be measured (time)

Figure 3-16. Relationship of Delay Time and Gate Waveform

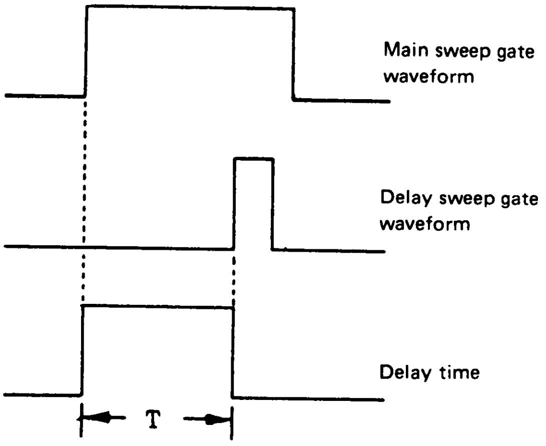

T is indicated on the display

sweep waveform jitter etc.

The maximum error is as follows.

$$\pm(\text{A sweep rate} \times 10 \text{ div} \times 2/1000) \pm 0.2\ \mu\text{sec}$$

This is a maximum error of 0.2% ±0.2μ sec when a delay time of 10 div on the CRT is measured (2% ± 0.2 μsec with 1 div, 20% ±0.2 μsec with 0.1 div).

As the measurement clock is fixed at 0.1 μ sec, the ±0.2 μ sec is ± 2 counts.

Figure 3-16 shows the relationship between delay time and gate waveforms.

3-3-3- A EVEN IN DELAY TIME Measurement

Input the signal to be measured to the oscilloscope, set delay operation, set DEALY TIME MULT for the portion to be measured, and then set the A EVEN IN D TIME swith (See Figure 3-18). The number of A sweep trigger pulses between A sweep and B sweep start points will then be counted and indicated on the display.

Measurement Error

The error when A sweep trigger pulses are counted is as follows.

$$\pm\left(\frac{\text{A sweep rate} \times 10 \text{ div} \times 2/1000}{\text{period of A sweep trigger signal}}\right) \pm 1 \text{ count}$$

The reason for this error

When SOURCE is set to RUNS AFTER DELAY the delay sweep start is not synchronized with the trigger so that the count varies due to the DELAY TIME MULT position and trigger level position. The maximum value in this case is ±1 count.

Figure 3-17 shows the relationship between trigger level position and count pulse.

Figure 3-17. Relationship of Trigger Level Count Pulse

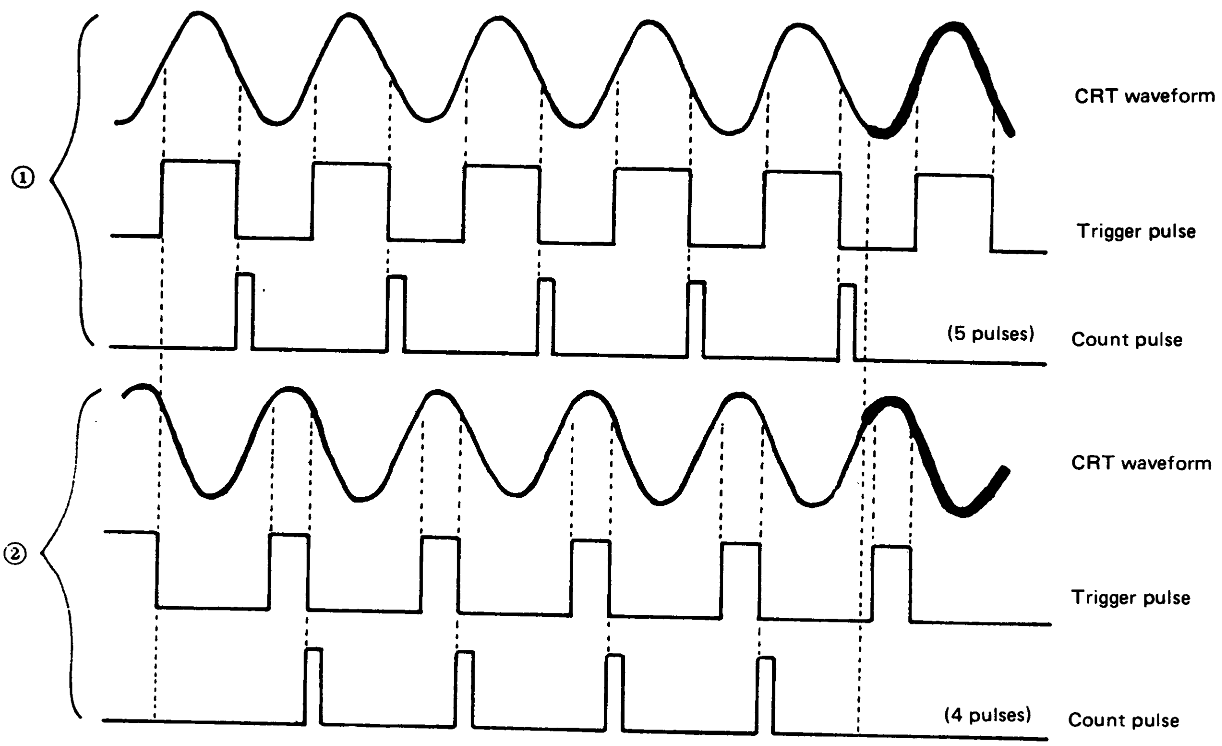

Count variation due to trigger level

Figure 3-18. AEVEN IN DELAY TIME Measurement

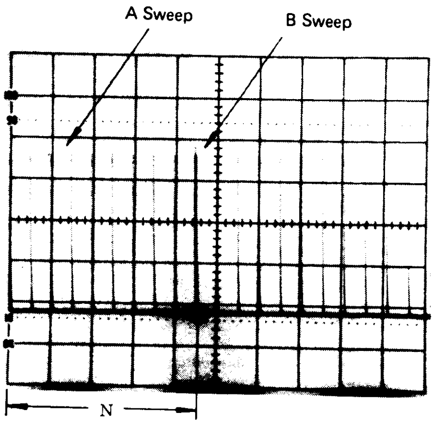

N : Number of A trigger pulses for portion to be measured (number)

3-4- MEASUREMENT BY DIGITAL MULTIMETER

3-4-1 Preparations Before Measurement

Connect the leads to the LO-HI terminal (in this case connect the black lead to the LO terminal).

Resistance Measurement

Set the function switch to Ω short the tip of the lead, and check that the value on the display is 000 when the range is switched from 200 to 20M. If 000 does not appear on the display, see SECTION 6 "Check and Adjustment" for details of zero Ω adjustment and adjust accordingly.

Range Exceed Indication

If the set range is exceeded when measuring voltage, current, or resistance, the highest digit is displayed as 1 or −1.

3-4-2 DC ·AC Voltage Measurement

Set the function switch to V. When measuring AC voltage, set AC/DC to AC, and when measuring DC voltage, set it to DC.

Set the range to a value suited to the voltage to be measured (200 mV, 2 V, 20 V, 200 V or 2000 V). A maximum of 1100 VDC may be measured with DC voltage measurement, and 1100 VDC, or 750 V rms, with AC voltage measurement.

3-4-3 Resistance Measurement

Ensure that the lead and the resistor lead or point to be measured are in proper contact so that contact resistance does not disport readings. Switches are set as follows.

- Set the function switch to Ω .
- Set the range to a value suited to the resistor to be measured (200 kΩ, 2 kΩ, 20 kΩ, 2000 kΩ or 20 MΩ).

The measured value unit will be indicated by the LED lit at the right of the display.

High Resistance Measurement

When measuring resistances of 1 MΩ or more, use the high resistance cable (optional) to prevent distortion of readings due to ham broadcasts and noise (See Figure 3-19).

3-4-4 DC · AC Current Measurement

Set the fuction switch to A. When measuring AC current, set AC/DC to AC, and when measuring DC current, set it to DC.

Set the range to a value suited to the current to be measured (2 mA, 20 mA, 200 mA or 2000 mA). A maximum of 2 A may be measured with both DC and AC current measurement.

Caution

As variations in the count may occur when measuring AC voltages having a frequency differing slightly from the commercial power supply frequency, the GND or guard terminal of the measured circuit (or device) should be connected to the GND terminal of the digital multimeter.

Figure 3-19. Cable for High Resistance Measurement (optional)

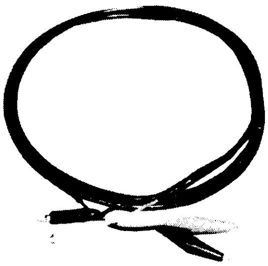

3-4-5 High Voltage Measurement (high voltage probe)

Use the high voltage probe (optional)when measuring DC voltages higher than 30 kV.

Specifications

Range	DC 10 V to 20 kV (20 V range) DC 100 V to 30 kV (200 V range)
Input resistance	1000 Ω approximately
Voltage division ratio	1000 : 1 (20 V or 200 V range)
Accuracy	±3% or less (20 V range) ±5% or less (200 V range)
Maximum input voltage	35 kV for 1 minute
Operating temperature	0 °C to 50° C
Humidity	85% RH.
Dimensions	Approximately 1.2 m (length including cord)

Installation

Connect the black alligator clip to the GND terminal of the device to be measured, connect the red clamp to the HI input terminal, and the black clamp to the LO terminal.

Measurement

Set the function switch to V, AC/DC, and range to 20 V or 200 V. Hold the probe (See Figure 3-20) by the red rubber cover and touch the tip to the high voltage section.

The value dispalyed at this time will be in kV.

Caution

Particular care should be taken to avoid electric shock when measuring high voltages. This particularly important when measuring high voltage in devices with low internal resistance and large current capacities.
If the GND lead connected to the LO terminal becomes disconnected from the GND of the circuit being measured while high voltage (1100 V) is connected to the input terminal, the circuits in the multimeter will be damaged. Always ensure that connections are positive. Always set the range to 20 V or 200 V when using the high voltage probe. Measurement errors are increased with other ranges.

Figure 3-20. Probe for High Voltage Measurement (optional)

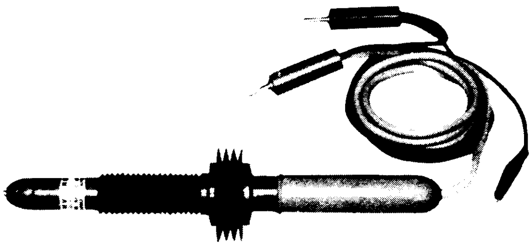

Section 4

Theory of Operation

This section describes the function and operation of each circuit in reference to the SS-5710D block diagram shown in figure 4-1-1.

The SS-5710D consists of the oscilloscope unit, universal counter unit, and digital multimeter unit.

The universal counter is electrically coupled with the oscilloscope, and the digital multimeter has an independent function. This section describes their operations and functions according to block diagrams.

For each block, the number in the box ☐ indicates the circuit number, so refer to the circuit diagram at Section 7.

For similar circuits such as the preamplifiers for CH1 and CH2 or the preamplifiers for CH3 and CH4, or the A and B trigger amplifiers, the following latter will be discribed only for the different items.

4-1 OCSILLOSCOPE UNIT

4-1-1 General Description

The circuit construction of the SS-5710D is shown in Figure 4-1-1. Each block is used for driving the CRT's electron beams finally.

Preamplifiers for Channels 1, 2, 3, and 4

The vertical deflection system has four independent preamplifiers. The preamplifiers for CH1 and CH2 combine an attenuator (VOLTS/DIV switch), variable (VARIABLE control), and magnifier (PULL X 5 MAG switch) to permit input deflection factor setting from 1 mV to 12.5 V per division of the graticule scale. The simplified attenuator provided for CH3 and CH4 permits input deflection factor setting to 0.1 V or 1 V. As an input signal is applied to the INPUT connector for each channel, it is converted to a balanced signal, which is amplified and led to the delay cable driver circuit.

Delay Cable Driver Circuit

The delay cable driver circuit leads the balanced signal from each preamplifier to the vertical main amplifier individually or by time division through diode gate opening and closing.

Modes of leading the balanced signal can be selected by setting the vertical MODE switch: CH1 or CH independent, display of the sum of CH1 and CH2 or the difference between them, two-channel (CH1 and CH2) display by time division, four-channel (CH1 through CH4) display by time division.

Multi-channel display by time division comes in two modes of operation: ALT and CHOP. ALT is the mode for changing display channels every sweep or horizontal axis, and CHOP is the mode for changing display channels every 300 kHz by the pulse from the built-in chop pulse generator. In the CHOP mode, a chop blanking pulse is applied to the Z-axis amplifier to erase the transient phenomenon during channel switching.

Vertical Main Amplifier

The vertical main amplifier is used for driving the electron beams which scan the fluorescent face of the CRT screen in the vertical axis (Y-axis) direction, and amplifies input signals up to the inherent deflection factor of the CRT to make the vertical input deflection factor correspondent to the CRT scale.

Trigger Signal Amplifier

The signals branched out from the vertical preamplifiers are led to the trigger amplifier, where the signals are amplified to the deflection factor required for the A and B trigger circuits.

The instrument has trigger signal amplifiers for CH1, CH2, CH3, CH4, LINE (from the power circuit), and NORM (from the main amplifier after electronic switching).

In TV trigger delay sweep, the vertical component is led to the A trigger circuit and the horizontal trigger component to the B trigger circuit.

Figure 4-1-1. SS-5710D Overall block diagram

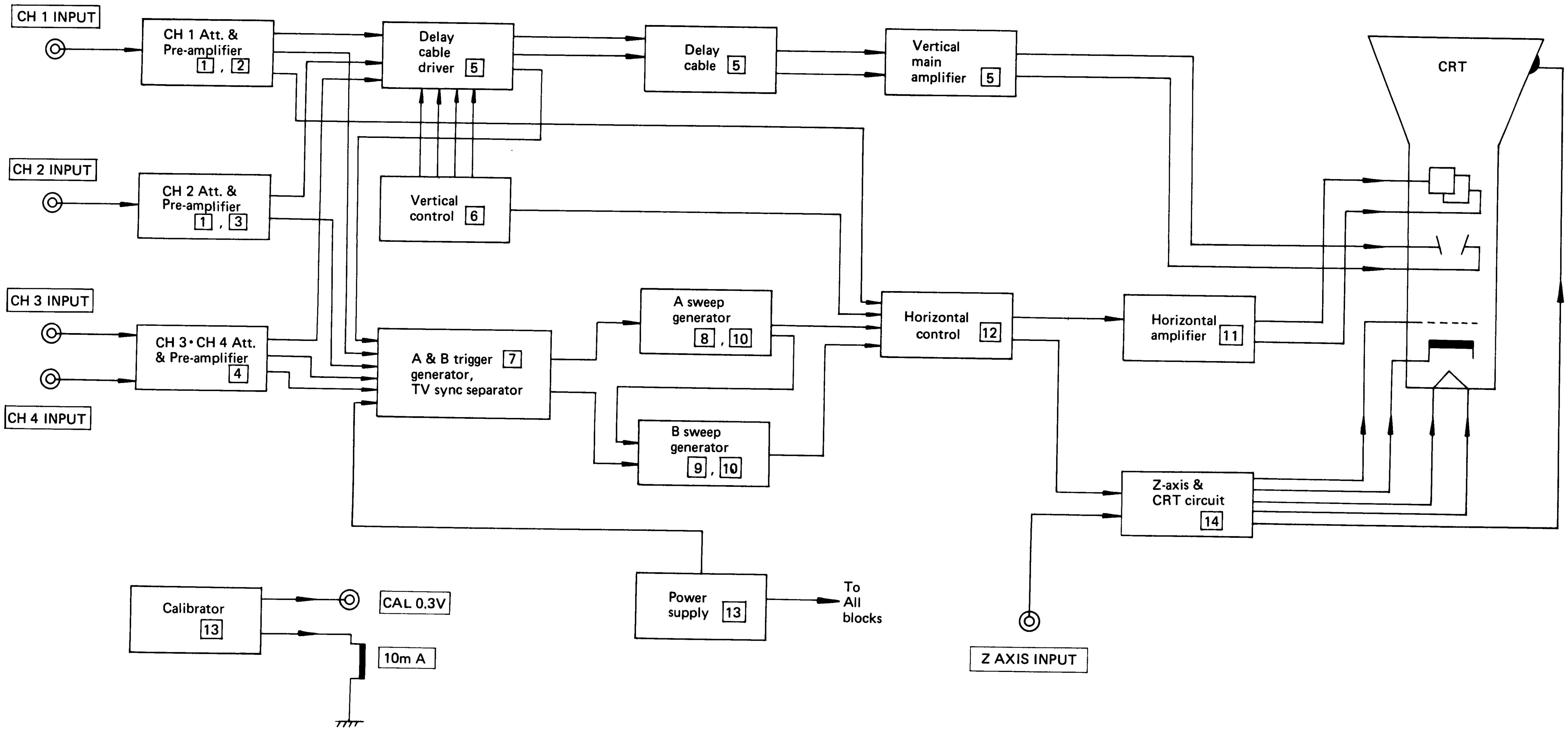

TV Trigger Signal Separator Circuit

Suppose that a television composite signal is applied to the vertical preamplifier. If the input is directly applied to the trigger signal amplifier circuit as it is, stabilized synchronization cannot be expected because the video signal component changes. Thus, the video signal component is removed by feeding the input through the TV trigger signal separator circuit, and the vertical trigger signal (TV-V) and horizontal trigger signal (TV-H) are separated by the time constant circuit composed of a resistor and capacitor. And after it, the stabilized synchronization is assured.

In TV trigger delay sweep, a horizontal trigger component is applied to the B trigger amplifier circuit.

A and B Trigger Circuits

The A and B trigger circuits adjust the input trigger signals to an appropriate level, generate a sharp trigger pulse which starts at an arbitrary point of the input signals, and sends the pulse to the sweep circuit. Any of the following signals can be selected.

A trigger circuit:	CH1, CH2, CH3, NORM, LINE, TV-V, TV-H
B trigger circuit:	CH1, CH2, CH4, TV-H

A and B Sawtooth Generator Circuits

The pulse generated by the A trigger pulse shaping circuit is applied to the A sawtooth generator circuit, and a sawtooth signal for horizontal axis sweep is generated when the sweep gate opens.

The B sawtooth generator circuit generates a sweep signal at a preset time after the operation of the A sawtooth generator circuit. The sweep by sawtooth B is called delayed sweep, which may be classified by the start timing of the B sawtooth generator circuit as follows:

Continuous Delay Sweep: Sawtooth B is generated when a pulse signal is generated by comparison of the voltage set with the delay multi-dial with sawtooth A.

Trigger Delay Sweep: Sawtooth B is generated by the first trigger signal B that reached after generation of a pulse signal by comparison of the voltage set with the delay multi-dial with sawtooth A.

As described above, sawtooth waved are generated by opening and closing the sweep gated, and sweep gate signals A and B generated at that time are led to the Z axis amplifier.

Horizontal Amplifier

The horizontal amplifier drives the electron beams which scan the fluorescent face of the CRT in the horizontal axis (X-axis) direction, and amplifies the input signals up to the inherent deflection factor to the CRT so that the trigger signals from the A and B sawtooth generator circuits will correspond to the time axis scale on the CRT screen.

Sweep signal A or B may be selected for the horizontal amplifier with the HORIZ DISPLAY switch A or A INTEN and B (DLY'D) input sweep signal A and sweep signal B respectively to the horizontal amplifier.

In ALT operation, sweep signals A and B are alternately selected by electronic switching every sweep, and input to the horizontal amplifier.

In X-Y operation, the signal input to the vertical preamplifier for CH1 INPUT led is to the horizontal amplifier via the trigger amplifier and the signal applied to CH2 INPUT is led to the horizontal amplifier. Thus, a Lissajous' figure can be displayed on the screen, by the signal applied to CH1 INPUT (X-axis display) and the signal applied to CH2 INPUT (Y-axis display).

Z-Axis Amplifier

The Z-axis amplifier selects gate pulses from the A and B sawtooth generator circuits, amplifies the selected pulse, and generates a CRT intensity modulation signal. These gate pulses are called unblanking pulses because they eliminate horizontal sweepback.

The unblanking pulses vary in waveform according to HORZ DISPLAY switch position. An unblanking pulse is generated from an A-gate waveform in the A sweep mode, from a combination of A-gate and B-gate waveforms in the A INTEN mode, and from a B-gate waveform in the B (DLY'D) sweep mode. In ALT sweep, unblanking pulses with the A INTEN waveform and B-sweep waveform are alternately provided to the HORIZ DISPLAY switch by electronic switching every sweep, and input to the Z axis amplifier.

In addition, the aforementioned chop blanking signal for erasing the transient phenomenon during chopping, and the signal applied to Z AXIS INPUT for intensity modulation from the outside are also provided to the Z axis amplifier input.

If a positive signal of 0.5 V or more is applied to Z AXIS INPUT, the CRT luminance lowers to permit intensity modulation. The INTEN control for adjusting overall intensity is also connected to the Z-axis amplifier input.

CRT Circuit

The CRT circuit consists of a circuit which generates heater voltages and high voltages for generating and accelerating electron beams, and grid circuits around the CRT for proper focusing.

Low-Voltage Circuit

The low-voltage circuit generates stabilized low voltage from commercial AC power to drive each circuit, and also supplies a line trigger signal to synchronize with the CRT scale illuminating power and commercial AC power.

Calibration Voltage and Current Generator Circuit

This is a constant-voltage constant-current square wave generator, and is set to a repetition frequency of about 1 kHz. Using the signal generated by this circuit, probe phases can be adjusted and oscilloscope input sensitivity can be calibrated. Current probe phase can also be adjusted by means of the current loop in the rear panel.

4-1-2 Vertical Deflection System

a. Signal input circuit and attenuator

The oscillator must measure various voltages (varying from extremely low to very high voltage, dc voltages, ac voltages, and dc-ac mixed voltages). The oscillator has attenuators for amplifying the input signals to an easy-to-read sensitivities and a change-over switch for selecting an AC connection (for rejecting the dc components) and a DC connection (for passing all components).

A signal to be measured is fed to the Input connector through a probe or a cable. The oscillator can receive up to 250 V (dc + ac peak) (directly through a cable) or up to 600 V (dc + ac peak) (using a 10:1 probe).

The AC/DC/GND switch is used to select a connection of the vertical deflecting system for the input signal. The setting positions of the switch are as follows:

AC: An ac connection is formed in the vertical deflecting system by IC01. The ac connection rejects any dc components of the input signal and passes dc components unconditionally.

DC: A dc connection is formed in the vertical deflecting system. The dc connection passes all components of the input signal (including the dc components).

GND: The input to the attenuator is grounded, that is, the input signal is not connected the attenuator. The ground potential is easily checked.

The attenuator attenuates the input signal to adjust its magnitude to a proper sensitivity (5 mV/division to 10 V/division, 11 steps).

5 mV/division and 10 mV/division in the x5 MAG mode respectively represent 1 mV/division and 2 mV/division (when the Variable control is set to CAL (clockwise end).

b. Preamplifiers (CH1 and CH2)

These amplifiers amplify balanced signals to the vertical deflecting sensitivity of the CRT corresponding to the value set by the attenuator.

In this case, the input signal is converted into a low-impedance output in order to amplify the frequency of the input signal in the wide range.

Figure 4-1-2 shows the block diagram of preamplifiers CH1 and CH2.

The input signal is fed to low-impedance converter 1Q01 through the attenuator and converted into a low-impedance output. (An input signal having a high impedance (1 MΩ) cannot be amplified in a wide frequency range.)

The emitter-coupled symmetric amplifier (2Q02, 2Q03, 2Q04, and 2Q05) amplifies the input signal and generates an output of a reversed polarity (a symmetric balanced signal). The magnifier x5 MAG (2S03), 2Q01, 2Q02, and 2Q03 work to multiply the vertical deflecting sensitivity by 5. The output of the preamplifier is sent to the postamplifier (2Q06, 2Q07, 2Q08, and 2Q09) to be amplified once more.

The output of the preamplifier is branched to base of 2Q10 and 2Q11 and output as a CH1 trigger signal and an X-axis signal (for X-Y scope operation) by the emitter of 2Q15.

The CH1 trigger signal is sent to the A and B trigger signal amplifiers through the coupling switches.

The X-axis signal is sent to the horizontal controller. The signal amplified by the postamplifier is sent to the switching circuit.

The vertical position on the CRT screen is changed by varying emitter voltages (2Q08 and 2Q07) by variable resistor 2R36.

The CH2 polarity block (3S02) reverses the polarity of the input signal. At NORM, the signal is fed to emitters of 3Q08 and 3Q17 and output from their collectors with the reversed polarity. At INVERT, 3Q08 and 3Q17 are disabled and the signal is fed to emitters of 3Q09 and 3Q16. The signal is output from their collectors with the same polarity. The output signal is connected in the reversed manner to the switching circuit and sent to the deflecting plate of the CRT.

The CH trigger signal is output from the emitter of 3Q15 and sent to the A and B trigger signal amplifiers through A and B coupling switches.

c. Preamplifiers (CH3 and CH4)

Figure 4-3 shows the block diagram of preamplifiers CH3 and CH4.

Their functions and operations are almost the same as those of CH1 and CH2, but the GND setting position is

Figure 4-1-2. Block diagram of CH1 and CH2 preamplifiers

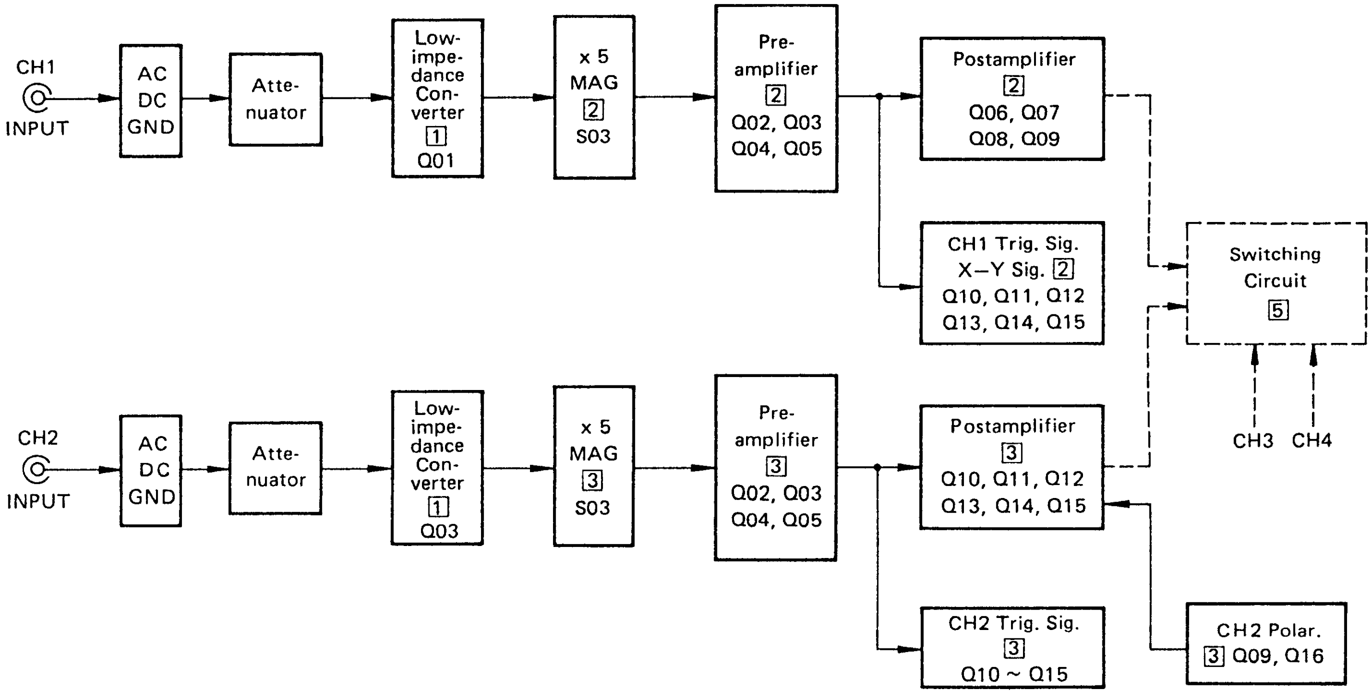

disabled and the attenuator has 0.1 V/division and 1 V/division only.

The input signal is fed to the gate of 4Q01 of the low-impedance converter through the attenuator, converted into a low-impedance output by 4Q01, and fed to the emitter-connected symmetric amplifier (4Q02, 4Q05, 4Q03, and 4Q04). The amplifier amplifies the signal. The amplified signal is sent to the switching circuit.

The CH3 trigger signal branched from the emitter of 4Q02 is fed to 4Q06 and output as a low-impedance signal to the A-trigger source switch.

The CH4 trigger signal branched from the emitter of 4Q08 is fed to 4Q12 and output as a low-impedance signal to the B-trigger source switch.

Vertical position on the CRT (CH3 position) is changed by vaying collector voltages of 4Q03 and 4Q04 by variable resistor 4R21. Vertical position on the CRT (CH4 position) is changed by varying collector voltages of 4Q07 and 4Q10 by variable resistor 4R51.

d. Switching circuit

The basic operation of the switching circuit is as follows: (See Figure 4-1-4.)

CH1: When the vertical MODE switch is set to CH1, a high voltage is fed to the anodes of 5D06 and 5D07 through 6D04. The diodes are forward-biased and become conductive (ON). Accordingly, the cathode potential is increased to make 5D05 and 5D07 inconductive (OFF). Thus the signal from CH2 is rejected. A low voltage is fed to the anodes of 5D02 and 5D03 through 6D05. The diodes are backward-biased and become inconductive. 5Q01 and 5Q04 are conductive by a forward bias voltage. Thus the signal from CH1 only is fed to the amplifier.

CH2: When the Vertical MODE switch is set to CH2, a high voltage is fed to the anodes of 5D02 and 5D03 through 6Q05. The diodes are forward-biased and become conductive (ON). Accordingly, the cathode potential is increased to make 5D01 and 5D04 inconductive (OFF). Thus the signal from CH2 is rejected. A low voltage is fed to the anodes of 5D06 and 5D07 through 6Q04.

Figure 4-1-3. Block diagram of CH3 and CH4 preamplifiers

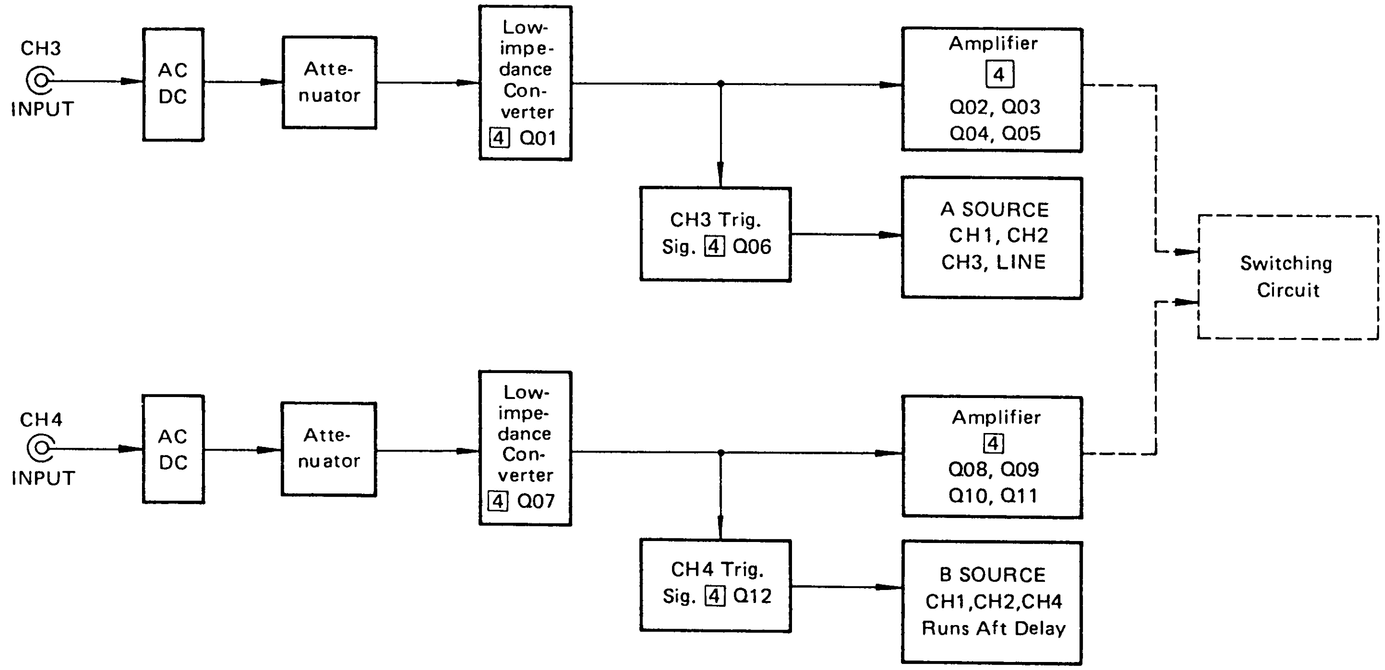

The diodes are forward-biased and become conductive. Thus the signal from CH2 only is fed to the amplifier.

ALT: When the Vertical MODE switch is set to ALT, Alternate pulses are sent from the horizontal controller to the vertical controller each time one horizontal sweep of CH1 or CH2 is made. Then the pulses are sent to the switching circuit. Instantaneous on-off switchings are repatedly performed by biasing the CH1 and CH2 switching circuit. Thus the signals from CH1 and CH2 are alternately displayed on the screen. This mode is fit for observing two signals having relatively high frequencies.

CHOP: When the Vertical MODE switch is set to ALT. 6IC01 and 6IC03 work as an astable multivibrator. Its switching frequency is determined by time constants of 6R17, 6R18, 6C03, and 6C04. By these time constants, 6IC01 and 6IC03 perform on-off switchings to alternate CH1 and CH2 signals and send the signals to the delay cable drive amplifier.

The delay cable drive amplifier performs on-off switchings every 3.3 μs (300 kHz).

This mode is fit for observing two signals having relatively low frequencies.

A chop blanking pulse eliminates the transient which occurs when the traces of CH1 and CH2 signals change. The chop blanking pulse is sent to the Z-axis amplifier through amplifier 6IC02.

ADD: When the Vertical MODE switch is set to ADD, the sum of signals fed to both CH1 and CH2 preamplifiers is displayed on the screen.

6D01 is made inconductive so that a high voltage may be applied to anodes of 5D01, 5D04, 5D05, and 5D08 through 5R03, 5R04, 5R09, 5R05, 5R06, and 5R10.

A current is not sent to 6Q01 (while a current is sent to 6Q01 through 5R01 and 5R02 at CH1 or CH2 mode). 5D01, 5D04, 5D05, and 5D08 are forward-biased and become conductive, so that the balanced signals of CH1 and CH2 preamplifiers are sent to the delay cable drive circuit concurrently. When the CH2 POLAR switch is set to INV in this state, the polarity of the CH2 input signal is reversed and the output of the switching circuit is displayed as a difference of input signals (to CH1 and CH2 preamplifiers) on the CRT screen.

QUAD: When the Vertical MODE switch is set to QUAD after setting the switch to ALT or CHOP, a quadtrace operation is set and input signals of preamplifiers CH1, CH2, CH3, and CH4 are displayed on the CRT screen.

– ALT and QUAD

At the ALT and QUAD modes, retrace lines of CH1 to CH4 are sequentially displayed on the CRT screen. While a sweep of a channel is being performed, sweeps of the other channels are inhibited. That is, while a CH1 sweep is being performed, CH2 to CH4 sweeps are inhibited (their switching circuits are made inactive). After the completion of the CH1 sweep, the CH2 sweep starts and the other channels' sweeps are inhibited. In the similar way, the CH3 and CH4 sweeps are performed and these steps are repeated.

– CHOP and QUAD

At the CHOP and QUAD modes, retrace lines of CH1 to CH4 are displayed on the CRT screen in the same manner as at the ALT and QUAD modes. The switching frequency is approximately 150 kHz.

e. Delay cable driver amplifier and vertical main amplifier

Figure 4-1-5 shows the block diagram of the delay cable driver amplifier and the vertical main amplifier. Signals sent from preamplifiers (CH1, CH2, CH3, and CH4) are sent to the switching circuit. The vertical controller controls the vertical axis mode.

Balanced signals from the switching circuit are sent to the delay cable driver amplifier and amplified there (by 5Q01 and 5Q02). The amplified signals are sent to the delay cable. The delay cable delays the transmission time by a predetermined time. Then the signal is sent to the vertical main amplifier (at the last stage).

f. Delay cable drive amplifier

The delay cable drive amplifier forms a postamplifier for outputs of the preamplifiers CH1 to CH4 and a compound amplifier. The compound amplifier makes the impedance of each input signal lower by a negative feedback of 5R03, 5R04, 5R05, and 5R06 to prevent the reduction of frequency characteristics and sends the low-impedance output to the delay cable.

g. Delay cable

The delay cable is provided to delay the transmission time of a vertical input signal so that the vertical input signal and the horizontal input signal can reach vertical and horizontal deflecting plates at the same time. The delay cable delays input signals by about 100 ns so that the leading edge of the input waveform may be observed at an internal period.

h. Vertical main amplifier

The main vertical amplifier amplifies the signal sent from the delay cable to a proper vertical deflecting magnitude on the CRT screen, makes the low impedance of the signal higher, and then sends it to the vertical deflecting plate of the CRT.

A compensating circuit (5R55, 5R82, 5C14, and 5C21) is formed to suppress a ringing and distortions on signal waveforms.

4-1-3 A/B Trigger Signal Amplifier

The trigger signal amplifier selects a trigger signal source by the Source switch and a connection of a trigger signal source and a trigger signal amplifier by the Coupling switch and amplifies the selected trigger signal as a trigger pulse signal to a sufficient amplitude. The amplifier and separater for TV trigger signals separate TV-H and TV-V trigger signals from TV composite video signals and amplifies them in order to stabilize the TV composite video signals.

Figure 4-1-6 shows the block diagram of A and B trigger signal amplifiers.

a. A and B trigger signal amplifiers

A TRIGGER SIGNAL AMPLIFIER:

The Source switch is used to select a trigger signal source. As already mentioned, when the Source switch is set to CH1, CH2, CH3, or CH4, the input signal is connected to the selected channel.

When the switch is set to NORM, a signal being displayed on the CRT screen in the selected vertical mode is a trigger signal.

When the switch is set to LINE, the power line signal is a trigger signal. This mode is very convenient to observe line frequencies and higher harmonics.

When the B-Source switch is set to RUNS AFTER DELAY, B sweep is delayed continuously and other range sweep is delayed synchronously.

The Coupling switch is used to select a connection between the trigger signal source and a trigger signal amplifier.

When the switch is set to AC, an ac connection is formed and its dc component is removed by capacitor 7C01. Thus the synchronization is done regardless of the dc components.

When the switch is set to DC, a dc connection is formed. Thus the synchronization is made by the dc components.

When the switch is set to HF REJ, a low-pass filter comprising 7R02 and 7C03 attenuates frequencies of about 10 kHz or higher. This mode is very useful in observing signals which contain high-frequency noises.

Figure 4-1-4. Block diagram of Delay Cable Driver Amplifier and Vertical Main Amplifier

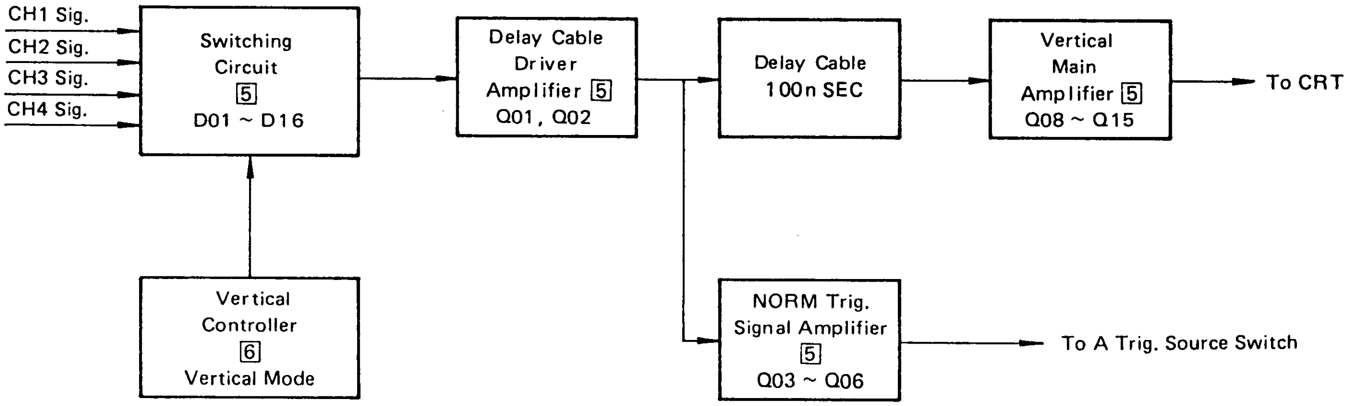

When the switch is set to LF REJ, a high-pass filter comprising 7R03 and 7C02 attenuates frequencies of about 10 kH or lower.

When the switch is set to FIX, the synchronization level is fixed. Thus the synchronization is done without manipulating the level.

When the switch is set to TV-H, the TV trigger signal separator is actuated in synchronization with the TV-H signal so that the composite video signal can be observed for one horizontal trace.

When the switch is set to TV-V, the TV trigger signal separator is actuated in synchronization with the TV-V

Figure 4-1-5. Switching circuit

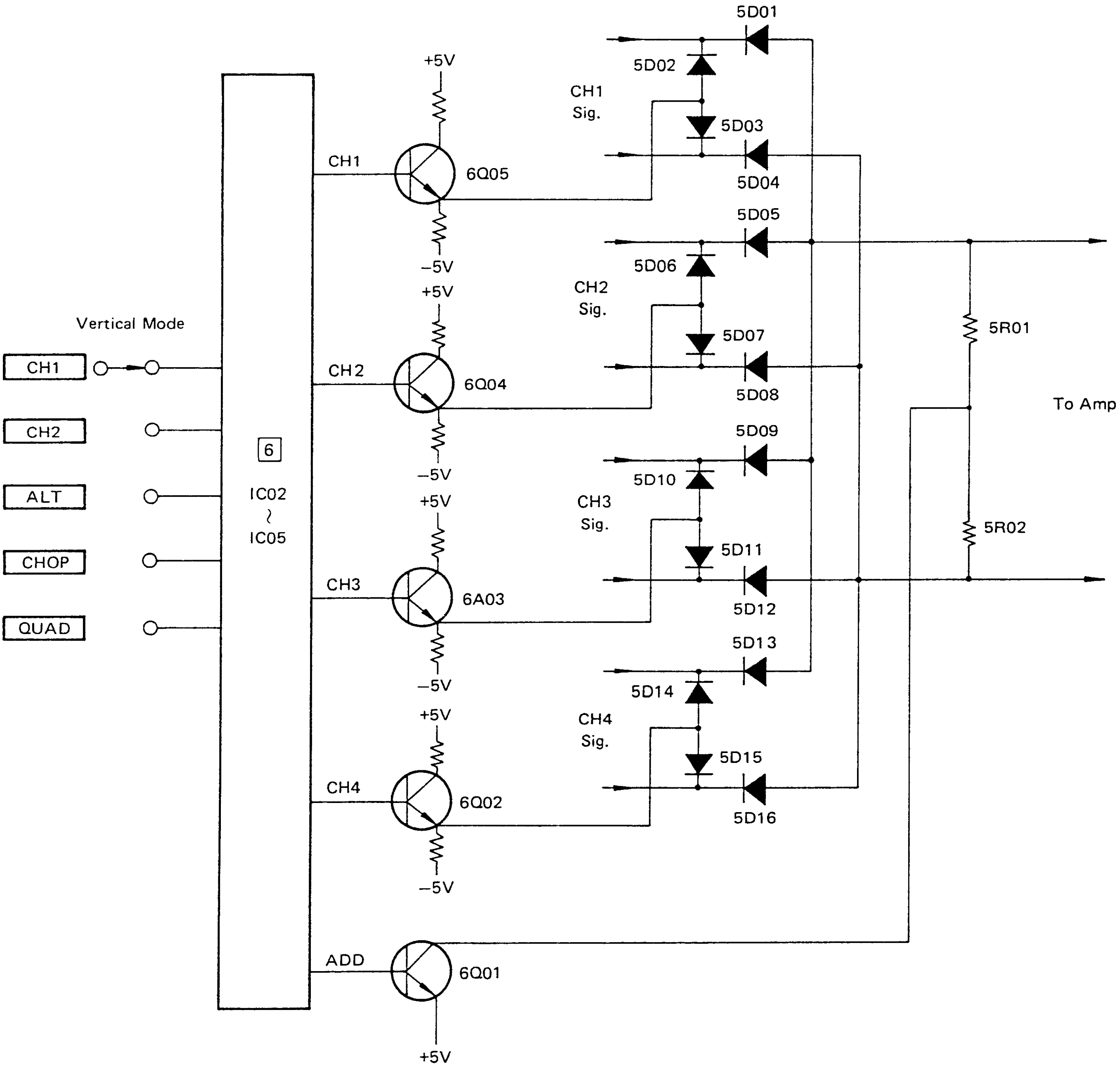

signal so that the composite video signal can be observed for one vertical trace.

B TRIGGER SIGNAL AMPLIFIER:

Similarly, a B trigger pulse signal is applied to the base of 7Q19, output as a TTL-level signal from the collector of 7Q19 to the B-sweep generator.

When the Horizontal mode switch is set to AUTO or NORM, the AUTO TRIG circuit (7IC02, 7IC03, and 7IC04) receives a trigger pulse signal and sets the Auto Trigger state or the Norm Trigger state. The stable multivibrator (7IC02 and 7IC04) has a time constant (about 30 ms) determined by 7C20, 7C21, 7R58, 7R59, and 7IC02.

When no signal is present or the set trigger level exceeds the predtermined range in the AUTO horizontal mode, a sweep is running freely.

When no signal is present and the set trigger level exceeds the predetermined range in the NORM horizontal mode, a sweep is stopped. TRIG'D 7D11 lights in sync operation. The Auto Trigger circuit outputs a trigger pulse signal at pin 6 of 7IC03 to the A-sweep oscillator.

b. TV sync signal separator circuit

Figure 4-1-7 shows the block diagram of the TV sync signal separator.

Figure 4-1-7. Block diagram of TV Trigger signal separator

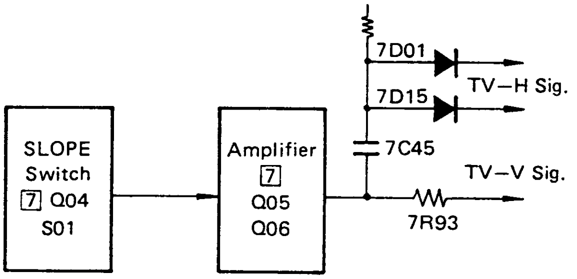

Figure 4-1-6. Block diagram of A and B trigger signal amplifiers

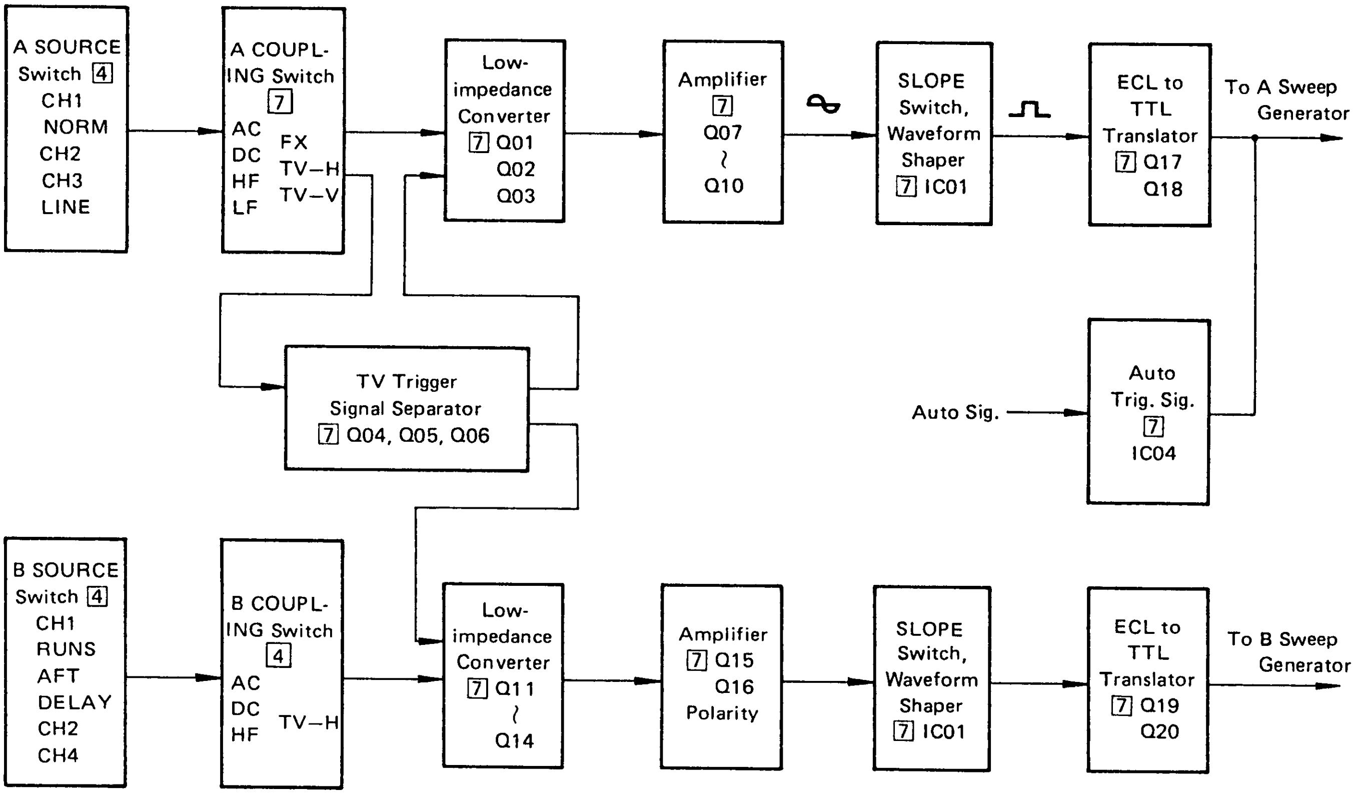

This separator extracts a trigger signal from the incoming TV composite video signal, amplifies the signal, then separates it into horizontal (TV-H) and vertical (TV-V) trigger signals.

The TV-H and TV-V pulse signals are sent to the A trigger signal amplifier and the TV-H pulse signal is sent to the B trigger signal amplifier.

When the SLOPE switch is set to "+" for the positive trigger pulse of the TV composite video signal given to the base of 7Q04 (polarity switch), a signal from the emitter of 7Q04 is sent to the base of 7Q06 (amplifier) with the same polarity.

When the SLOPE switch is set to "–" for the negative trigger pulse, the signal from the collector of 7Q04 is fed to the base of 7Q06.

Polarities of the trigger pulses of the TV composite video signal applied to the base of 7Q06 are positive. The signal is amplified by 7Q06 and output as trigger pulses having negative polarity from the collector. 7Q05 receives only negative trigger pulse component (cutting off the positive component) and outputs a signal with the reserved polarity from the collector.

The output TV-V and TV-H pulse signals are differentiated by 7C45 and 7R18. The TV-H pulse signal is sent to the A-grigger signal amplifier through 7D01 and then to the B-trigger signal amplifier through 7D15. The TV-V pulse signal passing through 7R19 is integrated by 7C06, 7R21, 7C29, and 7R93 and then fed to the A-trigger signal amplifier.

The low impedance converter (7Q01, 7Q02, and 7Q03) converts a high-impedance signal into a low-impedance signal and outputs the signal from the emitter of 7Q03. The signal is then converted into a balanced signal by 7Q07 and 7Q08, amplified by 7Q09 and 7Q10, then fed to the polarity-switching and waveform-shaping circuit.

c. POLARITY Selector and waveform shaper

Figure 4-1-8 shows the circuit diagram of the polarity switching and waveform shaping circuit (7IC01).

The A-trigger signal is fed to A of 7IC01, shaped into a trigger pulses there, and output from pin 10 of 7IC01. The polarity of the trigger pulse signal is switched by B of 7IC01. The magnitude of hysteresis for shaping the waveform of the trigger pulse signal is determined by 7R38 and the output impedance of the trigger signal amplifier.

The shaped trigger pulse signal is sent to the ECL-to-TTL translator (7Q17 and 7Q18).

The ECL-to-TTL translator converts pulse level from ECL to TTL. 7Q17 receives a trigger pulse signal of ECL level at its base and outputs a trigger pulse signal of TTL level from its collector. The signal is then sent to the AUTO TRIG circuit.

4-1-4 Sawtooth-wave Generator Circuit

a. A-sweep generator

Figure 4-1-9 shows the block diagram of the A sweep generator.

The sweep generator generates a sawtooth-wave (for synchronized sweep) in synchronism with a signal to be measured and a sawtooth-wave (for free-running sweep) independent of the signal to be measured.

The sawtooth oscillator takes three operation modes: AUTO, NORM, and Single Sweep (by Horizontal Mode switch). The sweep generator generates the following signals:

- Saw tooth wave

  The sawtooth-wave is fed to the horizontal amplifier, amplified there, and then sent to the horizontal deflecting plate of the CRT.

  The sawtooth-wave is also sent to the B sawtooth generator to generate delayed pulses.
- Unblanking signal

  The unblanking signal brightens the sweep trace and eliminates return trace. The unblanking signal is sent to the Z-axis amplifier, amplified there, and sent to the CRT.

Figure 4-1-8. SLOPE switching and waveform shaping circuit

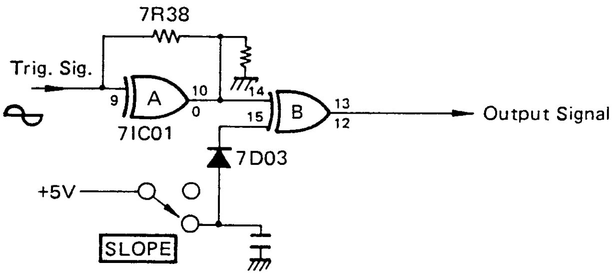

- Gate pulse signal

A gate pulse signal which is positive during the rise time of a sawtooth-waveform is amplified and output.

The sweep generator is designed to start sweeping when the output of a trigger pulse signal changes from low to high. Polarity of the trigger signal changes according to the setting of the SLOPE switch, as shown in Table 4-1-1.

Table 4-1-1

SLOPE	Positive	Negative
Polarity	High	Low
A-TRIG SIG	High ← Low	High → Low
OUT	High ← Low	Low → High

The sweep controller (8IC02) outputs a gate signal in the sweep wait state. When a Hold Off signal is released, the sweep controller is put in the sweep wait state again.

Figure 4-1-10 shows the timing chart of the sweep generator.

When the Horizontal Mode switch is set to SINGLE/RESET, the sweep controller stops sweeping and waits for a trigger pulse signal. When a trigger pulse signal is applied, the controller performs only one sweep (single sweep operation). While the controller waits for a trigger pulse signal, the READY LED is on.

The Timing circuit determines the sweep speed (by the A TIME/DIV). The saw-tooth generator is composed of 10Q01, resistors and capacitors of the timing switches. When the disconnect amplifier 8Q04 is off, the capacitor is charged by the constant current of 10Q01.

The terminal voltage of the capacitor is sent to the sweep controller through the buffer amplifier (8Q07) and Hold-Off generator.

When the saw tooth waveform reaches the predetermined level, the sweep controller turns on the Disconnect amplifier. This is the sweep-inhibition state.

Then the timing capacitor discharges and the amplitude of a saw-tooth waveform falls down to the start level. The Sweep-Start comparator 8Q09 feeds the output of the buffer amplifier (8Q07 and 8Q08) back to the Disconnect amplifier, discharges the timing capacitor down to a predetermined level (start level), and keeps the level.

A constant time required between two consecutive sweeps is set by the Hold-Off generator.

At a constant time after the completion of a sweep, the output of the Hold-Off generator makes the sweep

Figure 4-1-9. Block diagram of A-sweep generator circuit

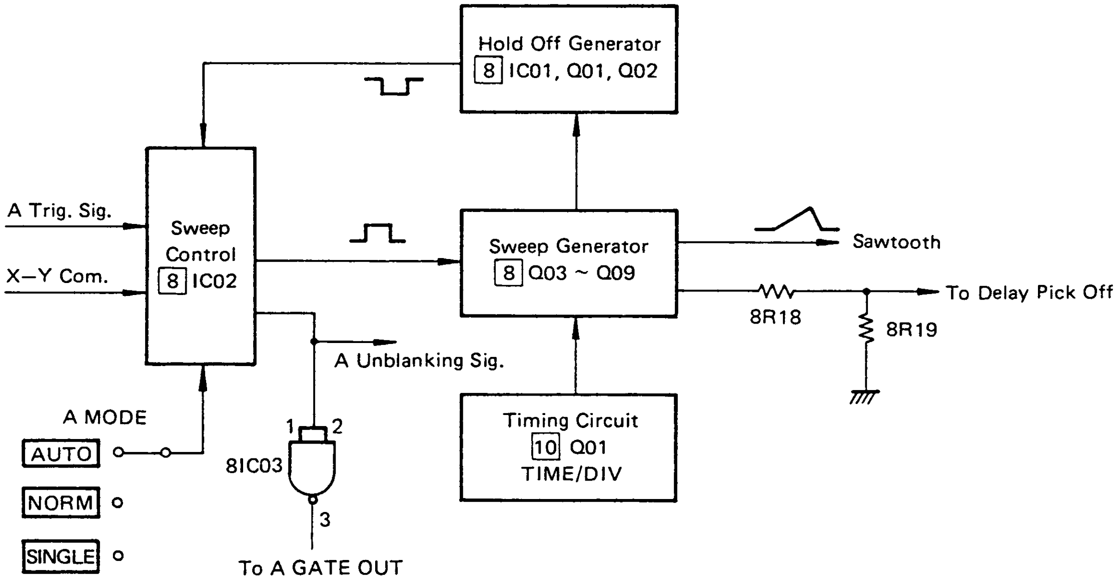

controller wait for a trigger pulse signal.

The sweep controller (8IC02) receives a sweep start signal and turns off the Disconnect amplifier. Then the next sweep starts. The unblanking signal and a gate signal are output from the sweep controller and the gate signal is sent through pin 3 of 8IC03. The output of the sweep generator is sent to the Delay Pick-Off circuit and a horizontal amplifier through the horizontal controller.

The Hold-Off generator (8IC01 and 8Q02) receives a saw-tooth signal and generates a Hold-Off signal (Sweep Inhibit signal). The signal is sent to the sweep controller. The capacitors and resistors of the Hold-Off generator determine the duration of the Hold-Off signal.

These capacitors are selected by the timing switches. The resistor (8R03) is a variable resistor.

A-Sweep Length resistor 8R04 is used to set the length of the sweep line. Voltage comparator 8IC01 detects a Hold-Off Start voltage and an end voltage to determine the hold-off time. (See Figure 4-1-10.)

Figure 4-1-10. Timing chart of the sweep generator

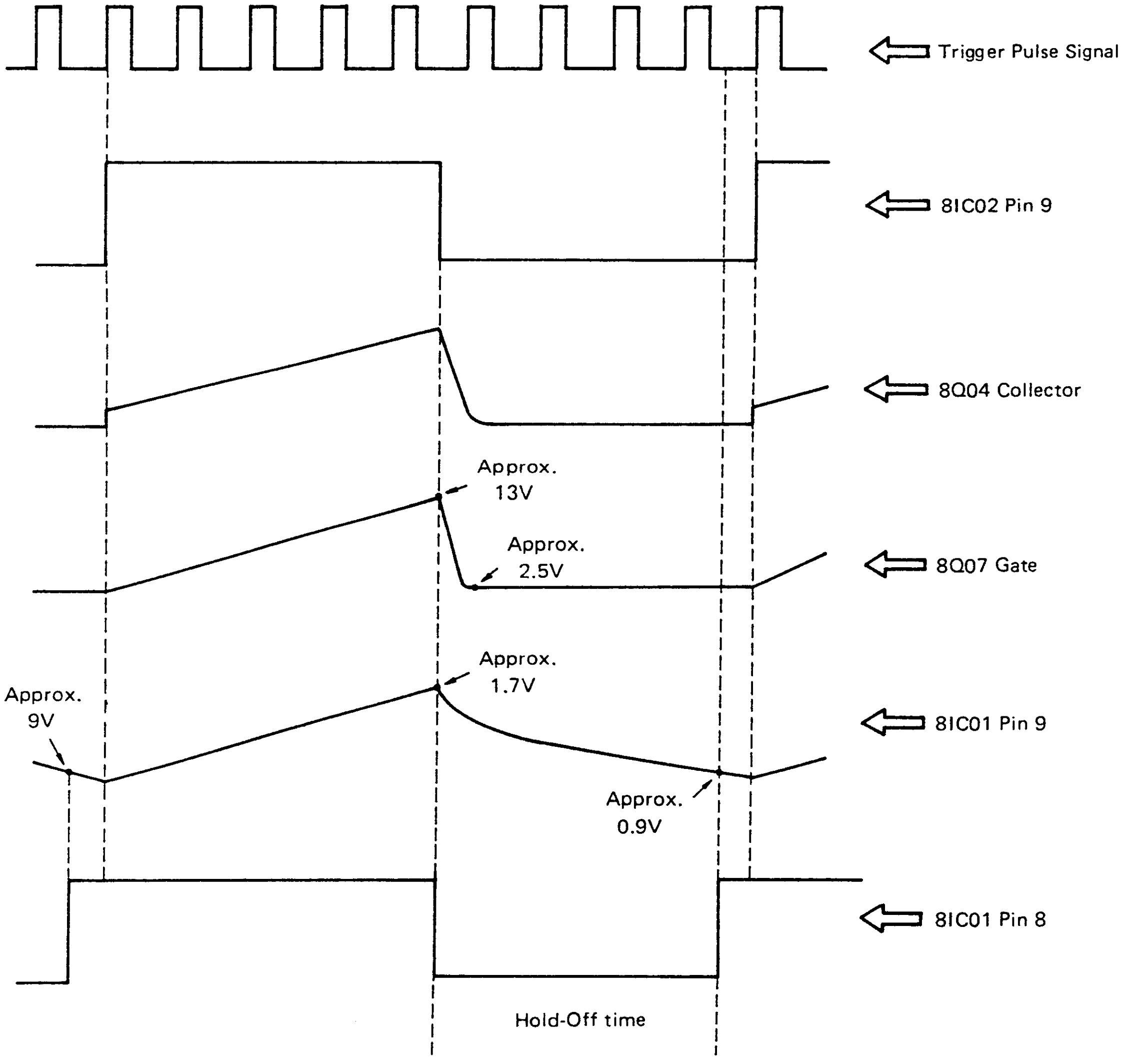

b. B-sweep generator

Figure 4-11 shows the block diagram of the B-sweep generator. This section describes circuits specific to the B-sweep generator. (For circuits having the same functions as those of the A-sweep generator, see 4.4.a.)

The B-sweep generator operates when the HORIZ DISPLAY siwtch is set to A INTEN, ALT, and B (DLY'D).

The B-sweep generator starts a predetermined time after the A-sweep generator started sweeping. This delay time is determined by the A TIME/DIV and DELAY TIME MULT switches.

When the B SOURCE switch is set to CH1, CH2, or CH4 (synchronization delay), The Delay Pick-Off pulse signal is fed to the sweep controller after the predetermined time and B-sweep is started by the trigger pulse signal.

When the switch is set to RUNS AFTER DELAY (continuous delay), the Delay Pick Off pulse signal is fed to the sweep controller after the predetermined time and at the same time B-sweeping starts.

The B-sweep generator generates the following signals:

- Saw tooth wave

  The sawtooth-wave is fed to the horizontal amplifier, amplified there, and then sent to the horizontal deflecting plate of the CRT.
- Unblanking signal

  The unblanking signal brightens the sweep trace and eliminates return trace. The unblanking signal is sent to the Z-axis amplifier, amplified there, and sent to the CRT.
- Gate pulse signal

  A gate pulse signal which is positive during the rise time of a saw-tooth waveform

The Delay Pick Off Comparator (9Q10, 9Q11, 9Q11, 8IC01, 9IC02, and 9IC03) has the following functions:

- Sends a Delay Pick Off pulse signal to the sweep controller a predetermined time after the A-sweeping was started.

Figure 4-1-11. Block diagram of B-Sweep generator

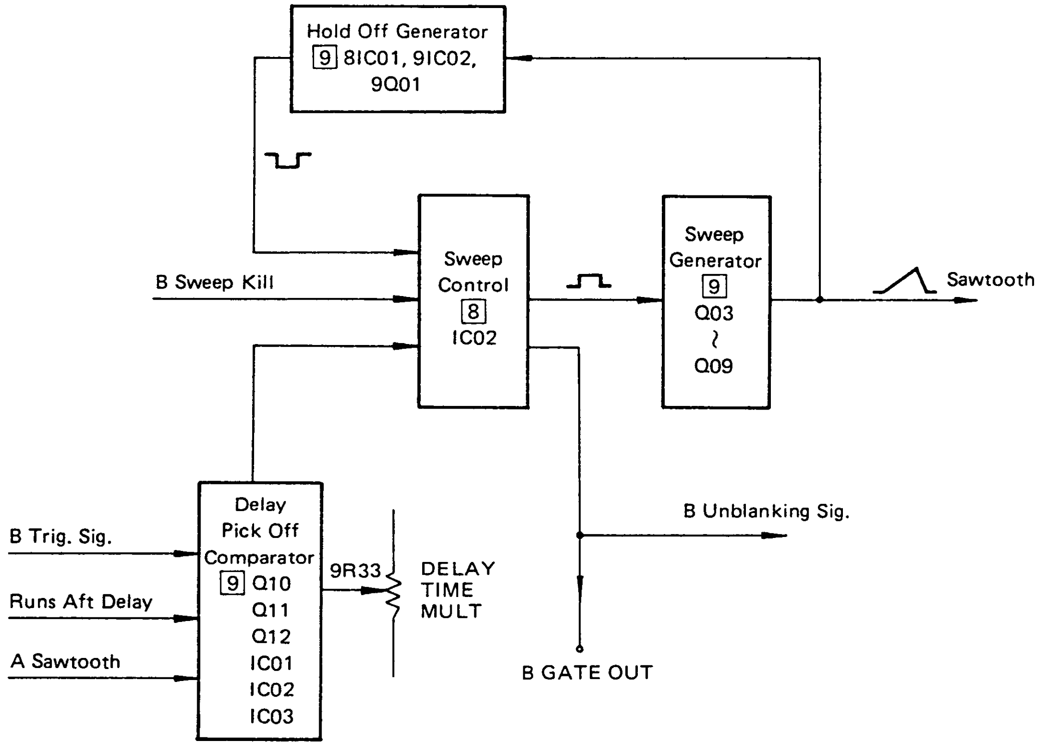

- Aborts the current sweeping when the A-sweeping is terminated.

An A sawtooth signal is fed to the base of 9Q10 and then pin 3 of 9IC01 (Delay Pick Off comparator). 9R33 (Delay Time Mult) is used to set a voltage (reference voltage) to the delay time (a constant time after the A-sweeping started). When the A sawtooth-wave reaches a predetermined voltage level, the oscillator generates a Delay Pick Off pulse signal and feeds it to the sweep controller. Thus the B-sweeping is started.

The oscillator also sends a pulse signal to the sweep controller according to the setting of B SOURCE switch (RUND AFTER DELAY and TRIGGER'D DELAY).

Figure 4-1-12 shows the timing chart of the oscillator. When the HORIZ DISPLAY switch is set to A and X-Y, a sweep inhibit signal is sent to the sweep controller.

4-1-5 Horizontal Deflection System

Figure 4-1-13 shows the block diagram of the horizontal amplifier.

The horizontal amplifier amplifies either of the following signals to fully deflect the electron beam horizontally on the CRT screen:

- A or b sawtooth-wave
- Signal applied to the Input terminal of the CH1 preamplifier (in X-Y scope operation)

Signals to be fed to the Input Common Emitter amplifier (11Q01 and 11D02) are selected by setting the HORIZ DISPLAY (to control the horizontal axis).

When the HORIZ DISPLAY switch is set to A, a high voltage is applied from the cathode of 11D01 to the cathode of 11D04. Thus, 11D04 is made off and 11D01 is made on to introduce the A sawtooth-wave. A low voltage is applied from the cathodes of 11D02 and 11D03 to the

Figure 4-1-12. Timing chart

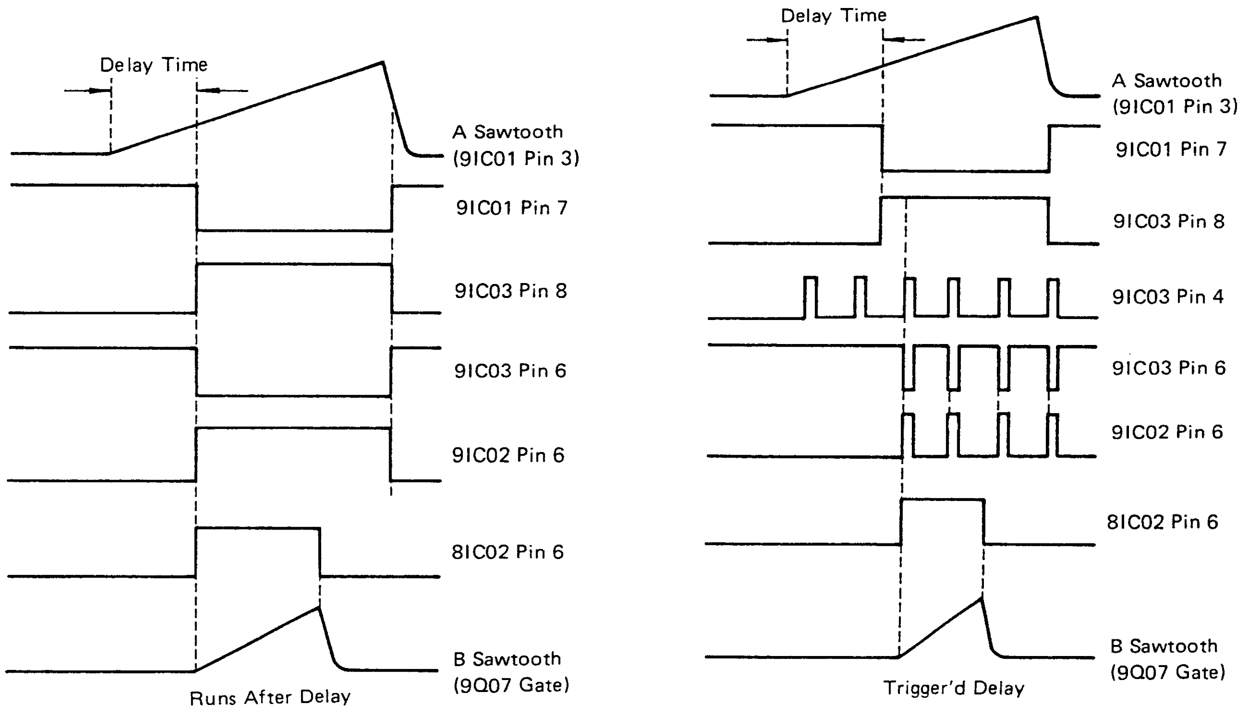

cathodes of 11D05 and 11D06. Thus 11D02 and 11D03 are made off and the B sawtooth-wave and the X-Y signal are suppressed.

The Input Common Emitter amplifier amplifies the incoming signal and outputs it from the collector. The output signal is partially fed back to the base through 11R13 and 11R16 (the negative feedback circuit).

The negative feedback circuit is provided to improve frequency characteristics and make them stable.

The signal applied to the feedback circuit is converted into a current and fed from collectors of 11Q01 and 11Q02 to their bases. Thus the current passing through the feedback resistor is changed into a voltage amplitude. The POSITION and FINE (11R09 and 11R10) resistors changes the current applied to the base of 11Q01 to adjust the horizontal position of the electron beam on the CRT. The Gain Setting and Limiting amplifier (11Q03 and 11Q04) has the following functions:

- The differential amplifier composed of 11Q03 and 11Q04 receives a signal at the base of 11Q03, amplifies it, and outputs two signals of different polarities from collectors of 11Q03 and 11Q04.
- The PULL x10 MAG magnifier switches emitter resistors 11Q03 and 11Q04 by reed relay 11RL01 to change gains.

When the magnifier is set to PULL x10 MAG, 11RL01 switch is made on. The resistance between emitters of 11Q03 and 11Q04 is about one tenth of the resistance between emitters of 11R25 and 11R26 in the NORM state because of a serial connection of 11R23, 11R24, 11R25, and 11R26.

As the result, the output voltages of 11Q03 and 11Q04 are amplified ten times and sent to the bases of 11Q07 and 11Q08.

The output amplifier (11Q05 to 11Q10) amplifies the incoming signal enough to deflect the electron beam horizontally on the CRT screen.

A negative feedback circuit (11R31, 11R32, 11R33, and 11R34) receives a part of the amplified signal and outputs a stable signal, improving the frequency characteristics.

The amplified output signal is fed to the horizontal deflecting plate of the CRT.

4-1-6 Z-axis Amplifier and CRT Circuit

Figure 4-1-14 shows the block diagram of the Z-axis amplifier and the CRT circuit.

The Z-axis amplifier (14Q10 to 14Q13) has the following functions:

- Illuminates A and B sweep traces and amplifies unblanking signals to eliminate return traces.

Figure 4-1-13. Block diagram of horizontal amplifier

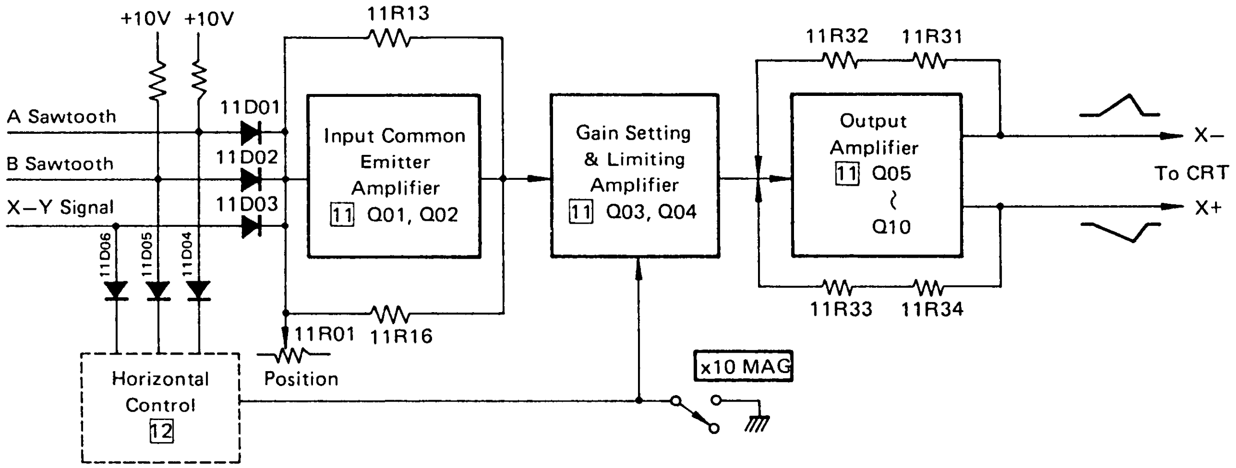

- Amplifies a chop blanking signal to eliminate transients which occur in the CHOP vertical mode.
- Amplifies an external-brightness controlling signal which was fed to the input terminal of the Z-axis amplifier.
- Amplifies the Time Marker signal.
- Adjust the intensity of sweep traces by the INTEN.

A signal to the Z-axis amplifier is first applied to the emitter of 14Q10 (a base-grounded amplifier having low input impedance). 14D12 and 14D13 work to keep 14Q12 and 14Q13 unsaturated. The signal output from 14Q10 is fed to the base of 14Q11, amplified there, and output from the emitter of 14Q11. One part of the signal is sent to the base of 14Q13 through 11D14 and amplified there. Another part of the signal is sent to the base of 14Q12 through 14C23 (passing the high-frequency component) and amplified there. Resistors 14R42 and 14R43 form a feedback amplifier and sends the output signal to the grid of the CRT.

The CRT circuit generates a high voltage for giving a high biasing voltage to plates of the CRT and deflecting the electron beam to draw rasters on the CRT screen. Biasing voltages to be supplied to the CRT vary from about +12.55 kV to −2.45 kV.

The high voltage oscillator is composed of 14Q01, 14Q02, 14Q16, and primary winding 14T01 (oscillating transformer). 14Q01 oscillates in about 30 kHz by a positive feedback from the collector winding to the base winding of the oscillating transformer (14T01, thus generating a high voltage at the secondary winding.

14C02, 14R52, and 14R02 supplies a current to the base of 14Q01.

14C99 and 14Q16 operate at the beginning of oscillation. During oscillation, 14Q16 becomes off.

14D02, 14D01, and 14R01 forms a protection circuit for keeping the voltage under the backward voltage between the base and the emitter of 14Q01.

The high voltage regulator (14IC01) is provided to keep the cathode voltage of the CRT to −2.45 kV independently of the fluctuation of the primary voltage and change of intensity (using a high voltage generated by the high voltage oscillator). Thus the deflecting sensitivity on the CRT is kept fixed.

The high voltage regulator is composed of an error amplifier comprising 14IC01, 14R03, 14R04, and 14R05 and an error amplifier comprising 14R12, 14R13, 14R14,

Figure 4-1-14. Block diagram of the Z-Axis amplifier and the CRT

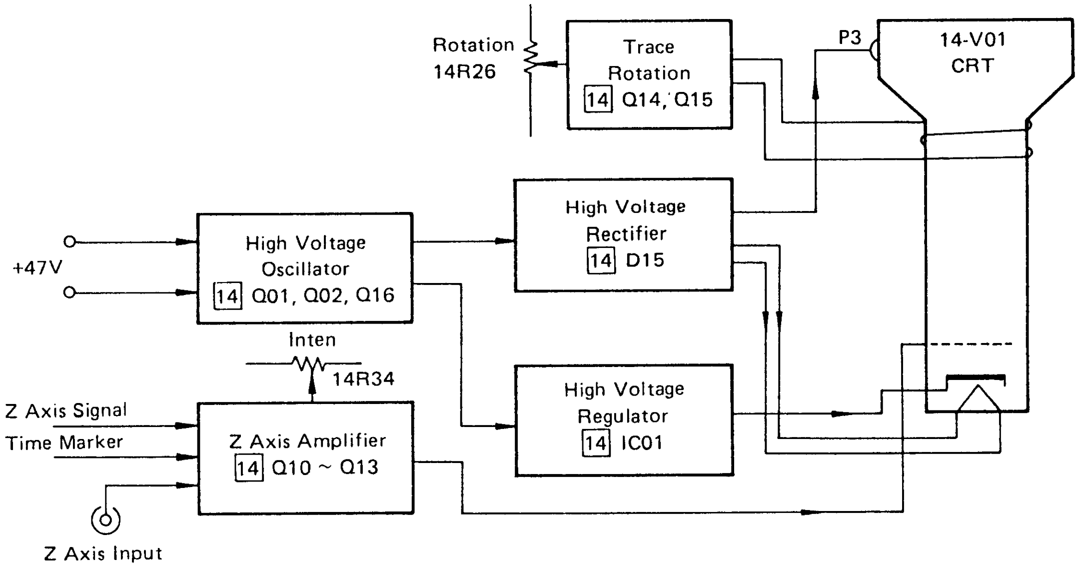

14R07, and 14R08. 14IC01 operates to keep the voltage between both ends of each resistor (14R12, 14R13, and 14R14) at −2.45 kV. The output of 14IC01 is sent through 14R02 to control the base current of 14Q01 (oscillation amplitude).

The high voltage rectifier is composed of a 6-times voltage rectifier (for supplying +12.5 kV to the third anode P3), a half-wave rectifier (for supplying a cathode voltage and the first grid voltage, and circuits (pin 1 of the focusing plate, pin 8 of ASTIG plate, and pin 2 geometry plate).

The Trace Rotation circuit is composed of 14Q14, 14Q15, 14R26, and 14L01. A current is applied to the rotation coil on the CRT neck and the generated magnetic field deflects the electron beam on the CRT.

14Q14 and 14Q15 reduce the current which passes through 14R26.

4-1-7 Power Supply

Figure 4-1-15 shows the low-voltage supply circuit. There are five regulated power supplies to make the oscilloscope work well. Each regulated power supply has stable output voltage which will not be affected by the fluctuation of loads and very few ripples. The power supply is protected against mis-grounding.

In the power input circuit, a power is first applied to the power switching plug through a fuse. The power switching plug has five voltage settings (100 V, 115 V, 220 V, 230 V, and 240 V) which are determined by connecting two primary windings of 13T01 (power transformer) serially or parallelly.

The −10 V rectifier supplies a reference voltage for the other regulated power supplies (except for +5V rectifier). The voltage output from the power transformer is full-wave-rectified by 13D04 (rectifier) and smoothed by 13C16 and 13C20 (electrolytic capacitors) into a direct current. The positive component of the smoothed voltage is sent to the series regulator (to be controlled by the +10 V power supply) and the negative component is sent to the series regulator to be controlled by the −10 V power supply.

The current limiter 13Q73 is controlled by error amplifier 13IC03 (1/2). In the error amplifier, Zener voltage −5.6 V of 13D15 (Zener diode) is sent to pin 5 of 13IC03 as a reference voltage. Voltage set by 13R41 (variable resistor) is fed to pin 6 of 13IC03. By this voltage, the output of pin 7 of 13IC03 controls the base current of 13Q09 (series regulator).

13Q12 is a low-current protector.

The +5 V power circuit 13IC01 and 13D01 receives the incoming voltage at 13D01 (rectifier), full-wave-rectifies it, smoothes it by 13C06 (electrolytic capacitor), and sends to 13IC01 (series regulator and error amplifier). The operation of 13IC01 is almost the same as that of the −10 V regulator. 13IC01 outputs a regulated voltage of +5 V. The other power circuits (+10 V, +47 V, and +100 V) receives −10 V as a reference voltage and outputs their regulated voltages. Their circuit configuration is almost the same as that of the −10 V power circuit.

Scale lamp:

A voltage from the power transformer is lowered to about 6.3 V by 21R03 and 13R04 (Scale Ilum) and fed to the scale lamp on the CRT. Its intensity is adjusted by 13R04 (variable resistor).

Line trigger signal:

Output voltage of the power transformer is sent to the grigger signal amplifier through 13C02, 13R02, and 13R01.

Figure 4-1-15. Block diagram of power supply

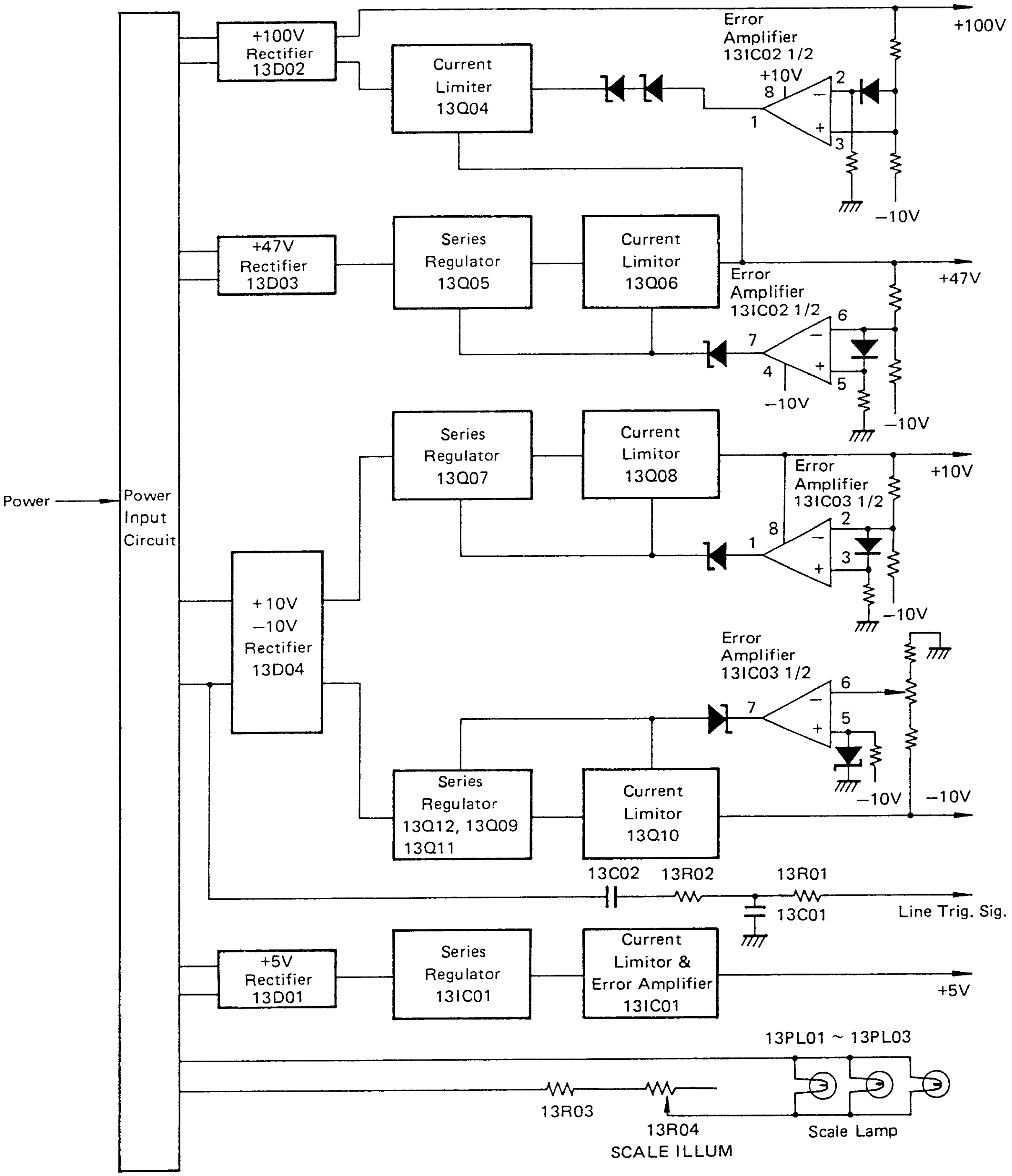

4-1-8 Calibrator

Figure 4-1-16 shows the calibrator.

The calibrator receives a voltage of +10 V and outputs 0.3 V, 10 mA (square waveform). The output voltage and current are used to calibrate the vertical deflecting sensitivity and to adjust the phase of the probe. Emitter resistors 13R09 and 13R12 of the calibrator (13Q01 and 13Q02) and a capacitor 13C03 forms an oscillator. Oscillation is caused by charging and discharging of 13C03 through 13R09 and 13R12. 13Q01 and 13Q02 repeat on-off switchings (about 1 kHz). A square signal is output from the collector of 13Q02 and fed to the base of 13Q03 and +10 V is fed to the emitter. A square signal fed to 13Q03 is output from the collector, performing on-off switchings when passing through the transistor. 13R13, 13R14, and 13R15 forms a voltage divider, through which a current of 10 mA flows. 13R14 (CAL ADJ) is adjusted to send 0.3 V to the output terminal. A current of 10 mA flows a loop terminal.

Figure 4-1-16. Block diagram of calibrator

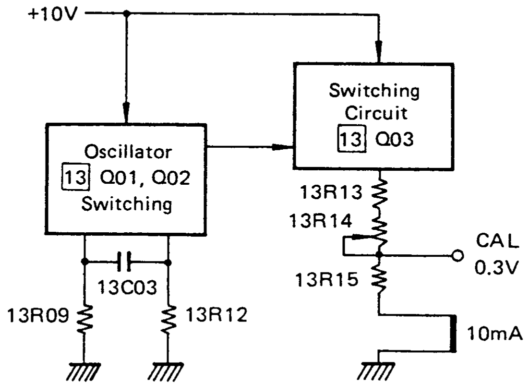

4-2 UNIVERSAL COUNTER UNIT

4-2-1 General Description

The universal counter unit has the circuit configuration as shown in Figure 4-2-1. The universal counter unit, by combining with the oscilloscope unit, indicates the signal frequency, period, time interval, delay time, and A EVENT IN DELAY TIME being observed on the oscilloscope. Also the signal can be directly input to the external signal input terminal of the universal counter, and its frequency and period can be obtained. All values are converted to digital signals and indicated on the light emitting diodes (red).

4-2-2 1/1000 Prescaler 1

The 1/1000 prescaler divides the input signal into 1/1000 and outputs the signals to measure frequency and period. When the INT-EXT switch 1S2 is set to INT, the A-sync pulse signal from the oscilloscope unit is applied to the base of 1Q001 and the pin 3 of 1Q003; when set to EXT, the signal applied to the EXT input terminal is similarly applied to the base of 1Q001 and the pin 3 of 1Q003. At EXT connection, signal coupling will become an AC coupling by 1C054.

Figure 4-2-1. Block diagram of universal counter

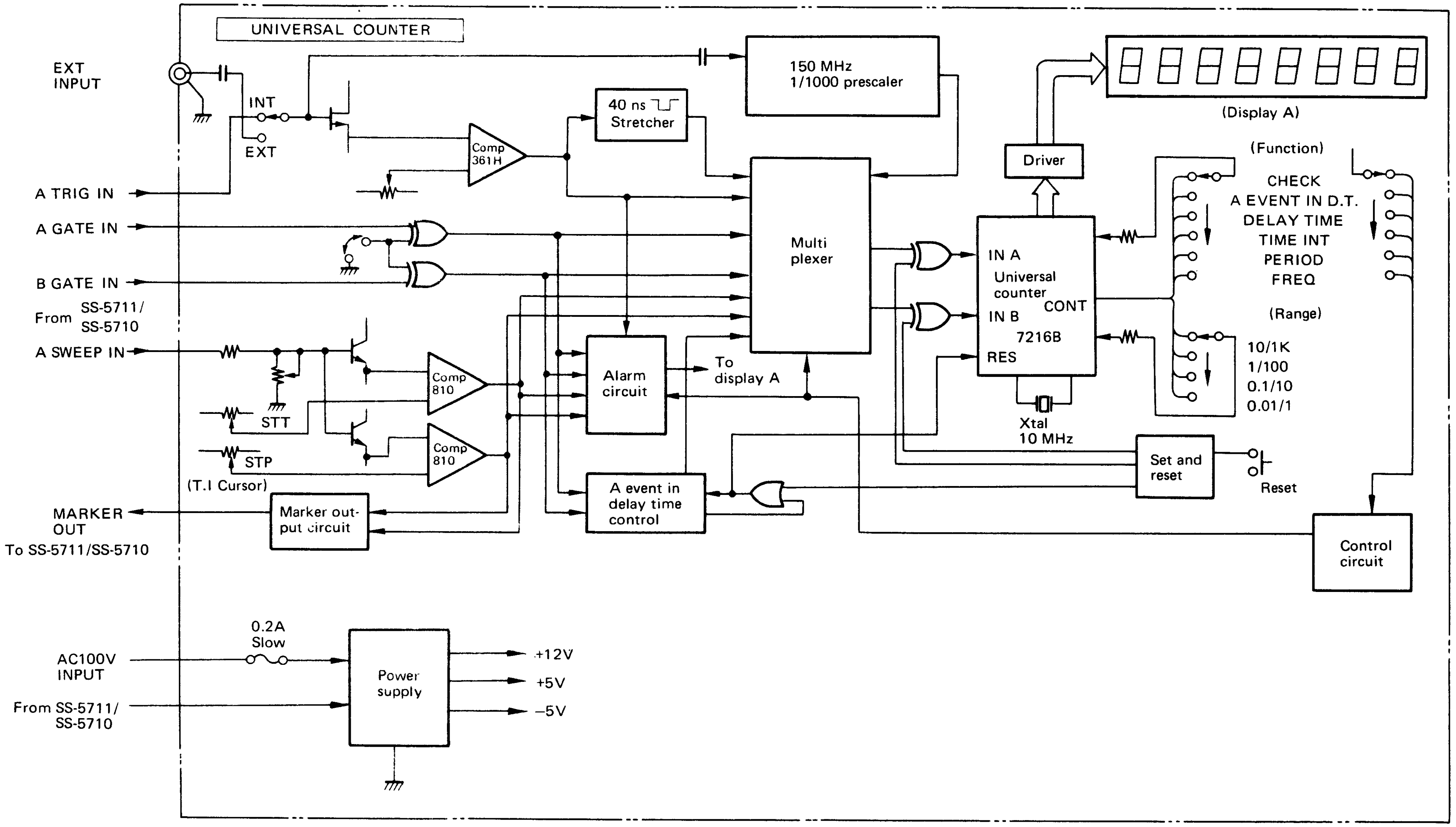

When a signal is applied to the 1/1000 frequency divider, all repetitive periods are divided into 1/1000, and guided to the control circuit. The input signal is divided in two steps; 1/100 by 1IC005, then 1/10 by 1IC006.

Meanwhile, the signal applied to the shaping circuit is guided through the comparator 1Q003 to pin 3 of 1IC007. In 1IC007, all input signal waveform is shaped into pulse signal form and is output from the pin 7. The shaped pulse signal is branched and guided via 1IC23 directly to the control circuit. The output signal from the shaping circuit is guided to teh stretcher circuit 1IC13, where it is further shaped into the signal of constant pulse width (40 ns) and guided to the control circuit.

4-2-3 Time Interval Control $\boxed{2}$

The time interval control circuit is as shown in Figure 4-2-4.

The time interval control circuit receives the A-B gate pulse and A-sweep sawtooth-wave signals and outputs the signals to measure delay time, A EVENT IN DELAY TIME time interval, and others. The A and B pulse signals from the oscilloscope units are input to the pulse polarity switch 2IC009. This equipment is designed to operate with the input pulse signal of the positive polarity, and so, if the input pulse has the negative polarity, the polarity must be changed. The output signal from the polarity switch is guided to the control circuit and is used as the start and stop signals to measure delay time, as shown in Figure 4-2-3. The output from the polarity switch is also branched and applied to the A EVENT IN DELAY TIME circuit 2IC010, 2IC011, 2IC12, 2IC008, and 2IC016. The pulse to measure the A EVENT IN DELAY TIME is output as shown in Figure 4-2-5. This circuit measures the A EVENT IN DELAY TIME once, then a given time later (hold-off time), repeats the measurement by the reset pulse signal. The hold-off time is determined by 2C024 and 2R030.

Figure 4-2-2. Block diagram of 1/1000 prescaler

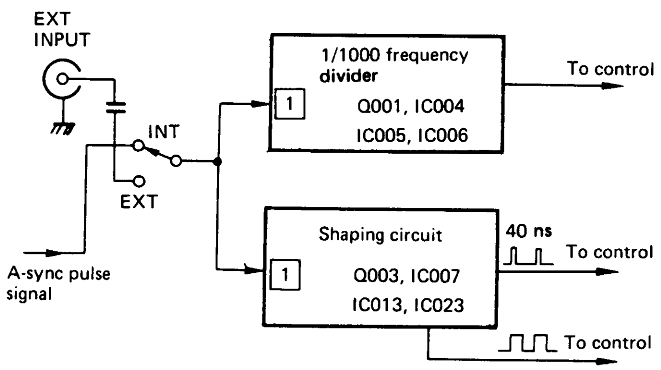

Figure 4-2-3. Delay time measurement

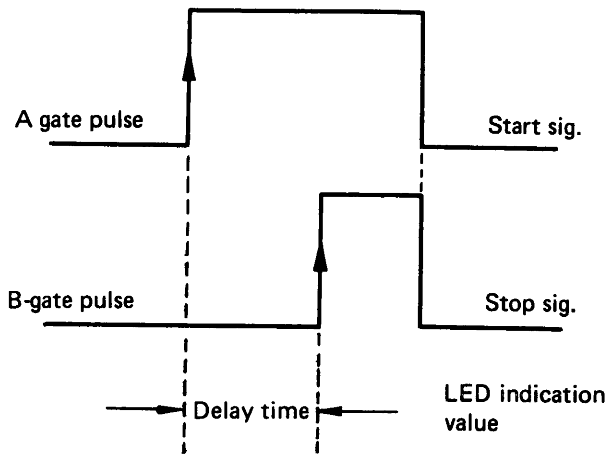

Figure 4-2-4. Block diagram of time interval control

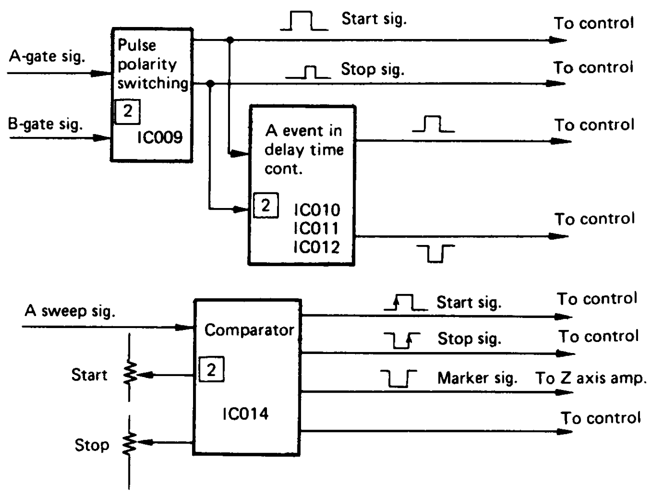

The comparator 2IC014 outputs the pulse signal to measure time intervals. As Figure 4-2-6 shows, the A-sweep sawtooth-wave is guided to the comparator, and the start point E1 of the waveform on the CRT screen to be measured is determined by the comparator 2IC014 and the variable resistor 2R048 to start the time internal cursor. Also the stop point E2 is set by the comparator 2IC015 and the variable resistor 2R049 to stop the time interval cursor.

The time interval between the start and stop points is converted to the negative–polarity marker pulse signal and output from the pin 8 of 2IC016. The marker pulse signal is guided to the Z-axis amplifier of the oscilloscope and amplified, then applied to the CRT circuit, where the screen waveform under observation undergoes maker-type intensity modulation.

Figure 4-2-5. Measurement of A EVENT IN DELAY TIME

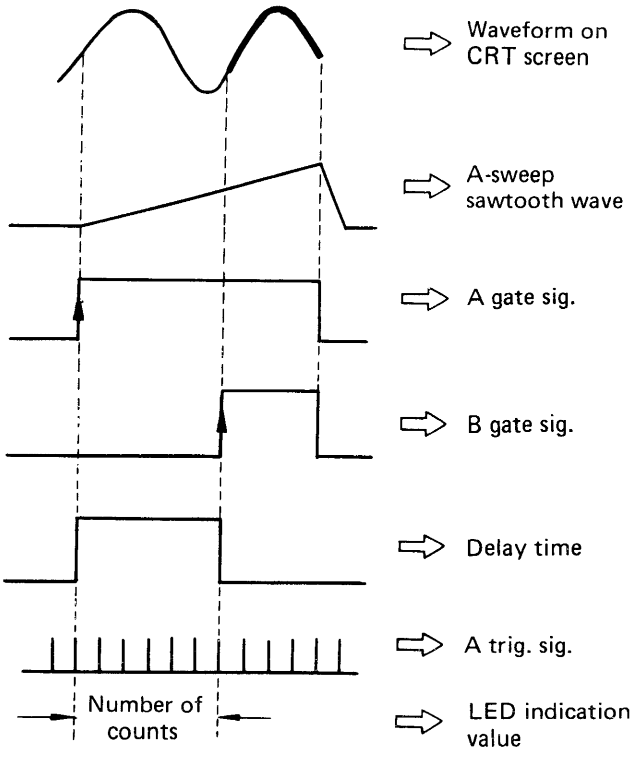

4-2-4 Control Circuit $\boxed{3}$, $\boxed{5}$

The control circuit is as shown in Figure 4-2-7. This circuit uses the function switch to select the signal to measure the frequency, period, time interval, A EVENT IN DELAY TIME, delay time, and others stated before. The selected signal is counted with ICs and the crystal oscillator and is indicated on LED.

The signal selectors 3IC017 and 3IC018 select, by setup of the function switch, various signals guided to the control circuit. The selected signal is handled by the counters 3IC019, 3FB001 and 3X001 and its trigger pulses of frequency, period, time interval, A EVENT IN DELAY TIME, delay time, and others are counted.

In the counter, its crystal oscillator 3X001 generates the reference frequency of 10 MHz and the gate pulse is formed. The counter counts the number of the input trigger pulses that pass during gate pulse being open, and indicates the result on LED.

The range switch is set the proper range to measure the frequency and period, depending on the signal to be measured and the digits required for the measurement.

Figure 4-2-6. Measurement of time interval

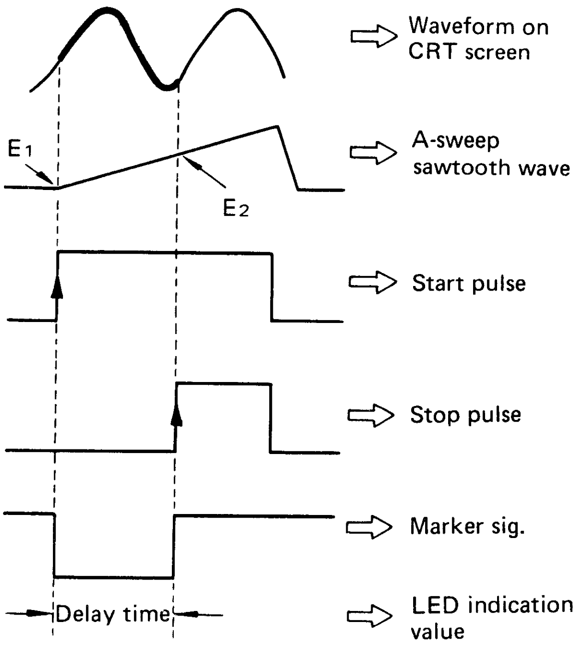

By pressing the RESET switch, the operation is initialized and is set in waiting state. LED indication thus returns to zero.

The alarm circuit receives the signal to measure period, time interval, dealy time, and emits an inhibit alarm in the following cases;

- When LF-HF is set to LF for period measurement, and the period of signal being measured is from 0.2 μs to 0.4 μs or less.
- When the START or STOP cursor is set for time interval measurement so that the time interval (intensity modulation portion on the CRT screen) is from 0.2 μs to 0.4 μs or less.
- When the delay time is set from 0.2 μs to 0.4 μs or less for delay time measurement.

When an alarm occurs, the unit display lamp flasches. At this time, after correcting the range from 0.2 μs to 0.4 μs or more, restart the measurement.

Figure 4-2-7. Block diagram of control circuit

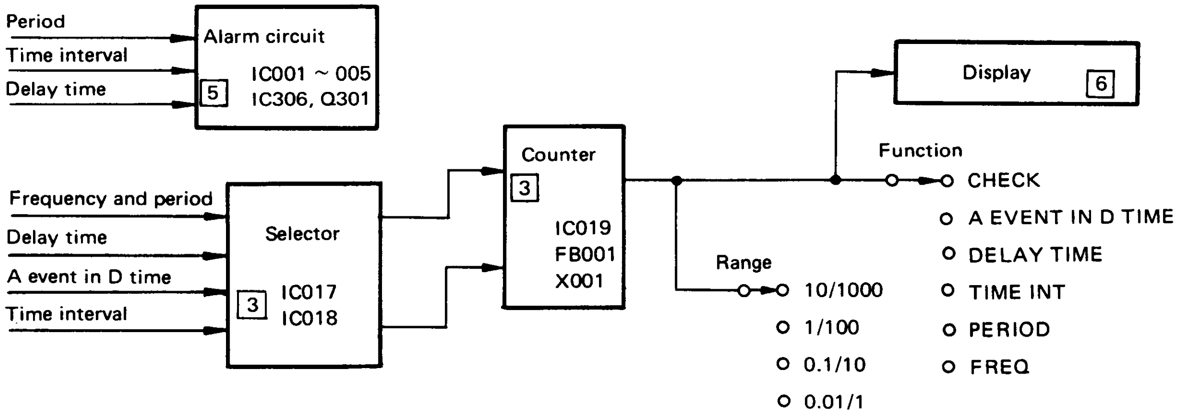

4-2-5 Power Supply [4]

The low-voltage supply circuit is as shown in Figure 4-2-8. It has three independent stabilized power supplies to operate the universal counter unit stably.

The stabilized power supply circuits provide the stable output voltage with low ripple not affected by load variations, and, if the outputs are grounded, they are protected from damages by means of the protective circuit.

The voltage to the power input is supplied from the primary 100-V winding terminal of the low-voltage power transformer of the oscilloscope unit. Thus, if the AC supply connected to the oscilloscope unit is other than 100 V, 100V ac is always supplied to the power input of the counter unit.

The output voltage of the power transformer is applied to the rectifier circuits of +12 V, +5 V, and −5 V, undergoes full-wave rectification by 4D001, 4D002 and 4D003, then smoothed by electrolytic capacitors and becomes d.c. voltage.

The d.c. voltage is applied to the series regulator, current limiter, and error amplifier, 4IC001, 4IC002, and 4IC003 respectively. Thus, the stabilized voltage −5 V is output from the pin 2 of 4IC002, +5 V from the pin 2 of 4IC003, and +12 V from the pin 2 of 4IC001. The stabilized output voltages are supplied each circuit of the universal counter unit.

Figure 4-2-8. Block diagram of power supply

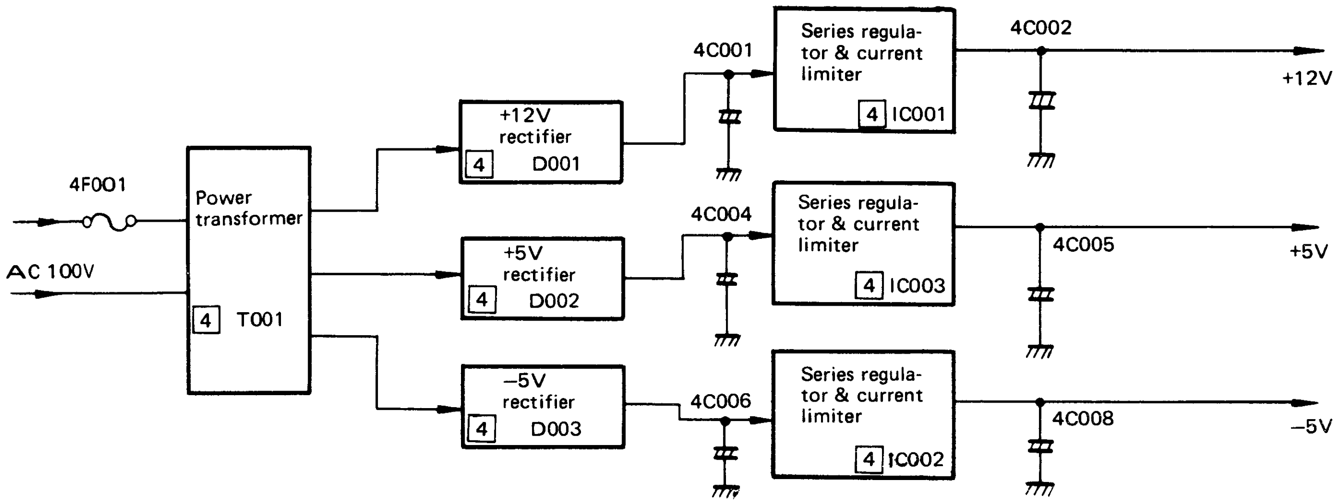

4-3 DIGITAL MULTIMETER UNIT

4-3-1 General Description

The digital multimeter circuit configuration is as shown in figure 4-3-1. The digital multimeter unit is independent of the oscilloscope unit, thus permitting the measurement to be made independently.

The measurement functions inlcudes that of dc voltage and current, ac voltage and current, and resistance. The measured results are displayed on LEDs (red). The signal input terminal Hi-Lo of the digital multimeter is floated from ground, and as a result, the potential at the ground side is divided into two kinds: the analog ground potential and the digital ground potential. If an external high voltage enters from the signal input terminal, the digital multimeter circuits are protected from damage by means of the protection circuit consisting of the discharge element and the surge absorber.

Figure 4-3-1. Block diagram of digital multimeter

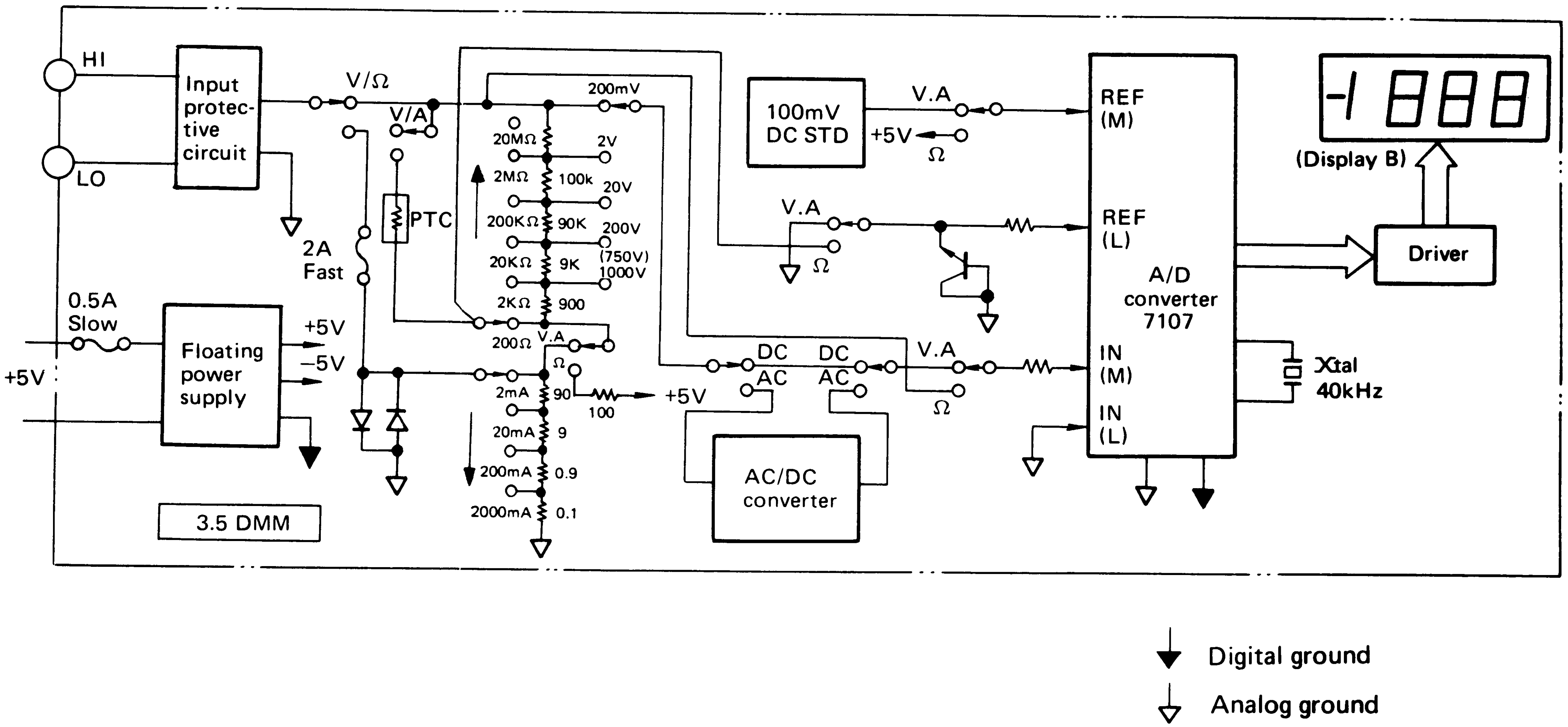

4-3-2 Input Circuit and Attenuator $\boxed{1}$

The input circuit and attenuator are as shown in Figure 4-3-2.

If a high voltage enters from the outside to the input circuit, the circuit may be damaged in some case. The protective circuit 1Z101, 1Z102 and 1Z103, by using the discharge elements and the surge absorber protects the circuit from damages. So that the high voltage does not enter the input circuit.

There are two attenuator circuits: one attenuator selects the proper range depending on the signal to be measured when ac or dc voltage (V) resistance (Ω) is measured; the other selects the proper range depending on the signal to be measured when ac or dc current (A) is measured.

In the current measurement, the fuse 1F102 is designed to be blown by 2-A or more signal current to protect the circuits.

Measurement signals of resistance, dc voltage and current are directly guided to the A/D converter through the attenuator. Measurement signals of ac voltage and current are guided to AC/DC converter through the attenuator.

Figure 4-3-2. Input circuit and attenuator block diagram

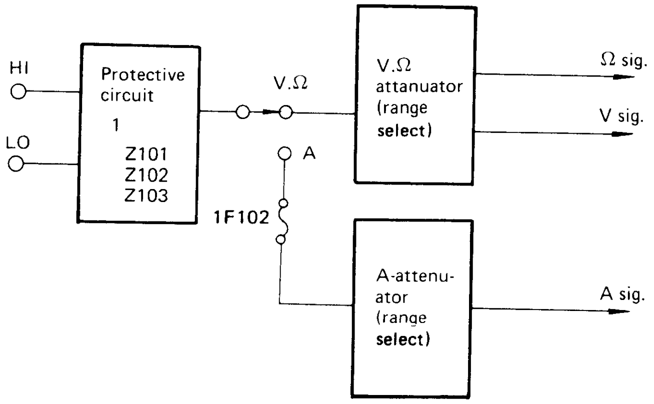

4-3-3 AC/DC and A/D Converters $\boxed{1}$, $\boxed{2}$

The AC/DC and A/D converters circuits are as shown in Figure 4-3-1.

The ac voltage and current signals applied to the AC/DC converter 1IC03 are rectified and converted to dc voltage and current signals, and are output as the rms values, The converted signals are guided to the A/D converter.

The 100-mV reference voltage is provided by means of 1IC105 from the +5 V supply voltage and is supplied to the A/D converter as the reference voltage. The 1R121 is the variable resistor to calibrate 200-mV range when the function is set to dc voltage.

The A/D converter 1IC104 converts the input analog signal to a digital signal. The converted digital signal is displayed on LEDs. The 40 kHz clock signal generated by the crsytal oscillator is applied to the converter and is used for time measurement of the analog signal and the result is converted to a digital signal.

Figure 4-3-3. Block diagram of AC/DC and A/D converters

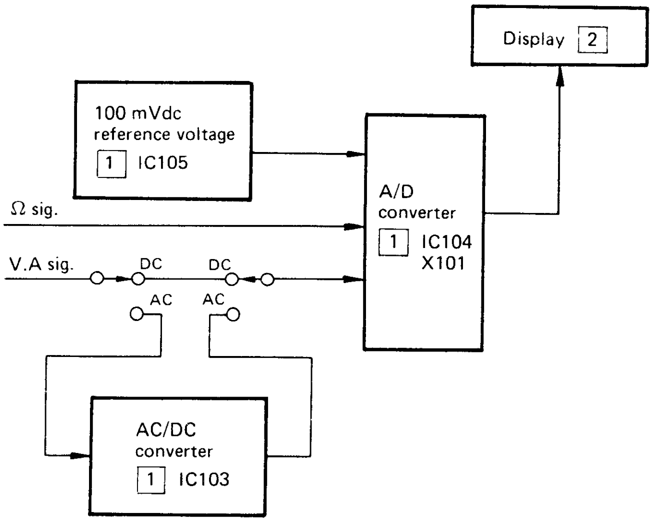

4-3-4 Power Supply $\boxed{1}$

The power supply is as shown in Figure 4-3-4.

To the input of the power supply, stabilized +5 V is supplied from the power supply of the universal counter. The voltage is applied via the fuse 1F101 to the DC/DC converter.

The DC/DC converter 1IC101 is used to float the potential at the ground side of the multimeter circuit from the ground potential. Therefore, the minus side potential of the input to the DC/DC converter is grounded, but the minus potential of the output voltage is floated from the ground potential specific to the digital unit. As a result, in the DC/DC converter, the input and output sides are not in dc connection. The output of +5V power supply is branched so that the one of +5 V is supplied directly to each circuit of the digital multimeter and the other +5 V is supplied to the polarity switch.

The polarity switch 1IC102 converts the +5 V power supply to the output of stabilized –5 V power supply. If the output voltage is short-circuited to the ground potential, 1IC102 is protected by the protective circuit so that the stabilized power supply circuit is not damaged. The output of the stabilized –5 V is suppled to each circuit of the digital multimeter unit.

Figure 4-3-4. Block diagram of power supply

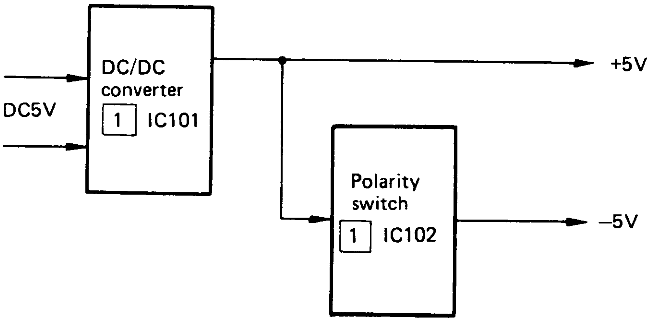

Maintenance

This section describes the maintenance procedures for keeping theSS-5710Din good condition over a long period of time. If it becomes necessary to check and replace the circuit parts, refer to the Circuit Arrangement Diagrams.

Apart from the instructions given in this section, the proper operation procedures described in section 2 must also be observed to assure long satisfactory operation.

5-1 PREVENTIVE MAINTENANCE

These are the preventive maintenance procedure for preventing troubles and keeping your oscilloscope clean and well for a long period of time.

5-1-1 Cleaning

The extent of dirt varies according to the ambient condition in which the instrument is used. The instrument should be cleaned as required. Dirt accumulated in the instrument causes overheating because it interrupts effective heat dissipation. It also damages the parts under high-humidity condition. A dirty switch contact or connector can cause faulty contact, and dirt accumulated on the inner circuit part can cause spark during the wet season. The fluids suitable or unsuitable for cleaning the instrument are shown in table 5-1.

Table 5-1

Suitable fluids	Alcohol, water, neutral detergent
Unsuitable fluido	Acetone gasoline, ether, lacquer thinner, methylethyl ketone, chemicals containing ketone detergent

Cover Cleanig

Remove the covers, and clean them with detergent. Remove stains of grease using a soft cloth damped with one of the suitable fluids shown in Table 5-1.

Front Panel Cleaning

Wet a soft cloth with one of the suitable fluids shown in table 5-1, and clean the front panel with it. If alcohol is used, some traces might be left. The front panel can also be cleaned with detergent. In this case, it is necessary to wipe off the detergent left on the panel and the control knobs with a cloth dampened with water.

Inside Cleaning

The best way of cleaning the dirt accumulated in the instrument is to use an air compressor. Dirt which remains after blowing with air compressor can be removed by using a soft paint brush and blowing again with air compressor.

CRT and Filter Cleaning

The CRT screen and the filter can become dirty if they are used for a long time. Ordinary stains and fingerprints can be removed by wiping with a soft cloth. If they are terribly dirty, use a soft cloth dampened with alcohol.

5-1-2 If Unused for a Long Time

If you don't use the instrument for a long time, remove the probe, adaptor, etc. From it and put them in the supplied bag. Attach the supplied panel cover to it, put the dust cover on the device, and store it in a place as dry as possibele.

This can keep the instrument clean.

5-1-3 Checking

Inspect the inside of the instrument periodically for burnt resistors, faulty contacts, or damaged printed circuit boards. Major troubles can be prevented by repairing them immediately.

5-1-4 Periodic Adjustment

Periodic inspection and adjustments are necessary for keeping the instrument in accurate operating condition at all times. If the instrument is continuously used, inspect and adjust it about every 1000 hours. If it is not used so much, it may be inspected and adjusted about every six months.

5-2 PARTS REPLACEMENT

The replacement procedures for faulty parts detected by circuit inspection are described here. Be sure to disconnect.the power cord from the electrical outlet before replacing any faulty parts.

5-2-1 Cover Removal

The covers must be removed before inspecting the inside or replacing faulty parts.

Be sure to remove the rear panel first in removing the covers. The rear panel can be removed by removing the two each screws on the right and left of the panel. Then, remove the six screws from the top, left, and right sides of the top cover in its front and rear parts, and slide the cover slightly to rear ward. Next, widen on both root of the handle and pull up the cover.

Remove one each screw in the front and rear parts of the bottom cover and the two screw near the center of it, and remove the bottom cover by pulling rearward. (The front end of the bottom cover is inserted behind the front panel).

5-2-2 Printed Circuit Board Removal

To replace a faulty printed circuit board or a faulty parts on a printed circuit board, remove the printed circuit board.

5-2-3 Printed Circuit Board Parts Replacement

In replacing diodes, transistors, IC's, resistors, or capacitors, on a printed circuit board, use your soldering iron carefully so that neither the copper foil of the printed circuit board will be peeled off nor any parts on the circuit board will be damaged.

Because the semiconductors, such as transistors and diodes, are not thermal-resistant, pinch the leads with tweezers and solder them quickly component so that the heat of the soldering iron will not be directly conveyed to the semiconductor. Diodes and transistors used for replacement must have good performance.

The resistors, capacitors, and other passive elements used in the instrument are carefully selected so any replacement parts to be used in their place must have good ones. (See the parts list in section 8.)

Electrode contact of transistor or diode and serious variation of their characteristics may incidentally make a resistor burn or a capacitor short-circuit. If such a trouble should occur, eliminate the cause of it before replacing the faulty part.

5-2-4 Replacing Transitors, Diodes or IC's

In replacing a transistor, diode, or IC, make sure of the electrodes.

Particularly, transistors must be replaced with ones that have good performance. The transistors that have been specially selected are moted in the schematic diagrams.

5-2-5 Power Transistor Replacement

The power transistors for the instrument are mounted on the rear sub panel. In replacing any of them, remove the rear panel, and remove the screw that fastens the transistor. The power transistors are connected with a connector.

In installing a new transistor, first wind heat dissipating silicon rubber (TC-30) around the transistor to assure satisfactory heat dissipation between the transistor and sub panel, and install the transistor. Be sure to insert it into the connector in the correct direction. (Connect the brown lead of the connector to pin 1 of the transistor, and the orange lead one to pin 2 of the transistor.)

5-2-6 CRT Replacement

Handle the CRT carefully in replacing it because it will be damaged easily by dropping or shock. Care must be also taken not to apply too much strain to the deflection pin to prevent the glass from cracking.

The CRT removal procedure is as follows:

1. Remove the rear panel and the top cover.
2. Disconnect the CRT socket.
3. Remove the anode cap after discharging it because it might retain a high voltage charge.
4. Disconnect the wires from the delfection pin.
   The blue and yellow leads are for vertical deflection, the white and black leads for horizontal deflection, and the red lead is for the negative electrode of 03. Disconnect the leads with care so that they will not be rewired to the deflection pin in the wrong way.
5. Disengage the connector at the tip for the trace rotation coil leads (white, black).
6. Pull out the ORTHO leads (green blue).
7. Remove the four screws that fasten the printed circuit board (V main amplifer) over the CRT, and lift it slightly.
8. Remove the two screws that fasten the CRT clamps to the rear sub panel.
9. Loosen the long screws for the CRT clamps that fasten the CRT.
10. Slightly pull the CRT and shield case rearward, lift the front end of the CRT and pull it forward until it comes out.
11. Pull the CRT carefully from the shield case.

Reverse the above procedure for installing the CRT. If the CRT has been replaced, readjustments must be made by referring to section 6 Performance (Check) and Adjustment.

5-2-7 High-Voltage Power Transformer Replacement

Care must be taken in replacing the high-voltage power transformer which supplies high voltage to the CRT because the CRT cicuit may be live with high voltage. The removal procedure is as follows:

1. Remove the rear panel, and top and bottom covers.
2. Remove the two screws that fasten the high-voltage case, and remove the case.
3. Remove the three screws that fasten the printed circuit board for the high-voltage circuit, disengage the printed circuit board connector and transistor connector, and remove the printed circuit board.
4. The high-voltage power transformer is soldered on the printed circuit board. It must be unsoldered by using a soldering iron. When the high-voltage power transformer has been replaced, readjustment is necessary.

5-2-8 Replacing Control Knobs and Rotary Switches

The control knobs and rotary switches are mounted on the printed circuit boards and the front sub panel. Their replacement procedure is as follows:

1. Remove the screw from the printed circuit board on which the control knob or rotary switch to be replaced is mounted.
2. Disengage the connector that is connected to the printed circuit board.
3. Remove the control knob or rotary switch.
4. Remove the nut which fastens the contol or rotary switch, and remove it together with the printed circuit board.
5. Melt the solder that fastens the control or rotary switch, using a sodering iron. Reverse the above procedure for installing them.

TROUBLESHOOTING FLOW CHART

Oscilloscope Section

First, set the switches and controls as follows;

POWER	Off	COUPLING (A, B)	AC
INTEN	Mid-position	SOURCE (A, B)	CH1
FOCUS	Mid-position	HOLD OFF	Fully counterclockwise
SCALE	Fully clcockwise	MODE (sweep)	AUTO
MODE (vertical)	CH1	LEVEL/SLOPE (A, B)	Push, Mid-position
POSITION (CH1, CH2)	Mid-position	A TIME/DIV	1 msec
(PULL x5 MAG) (CH1, CH2)	Push	B TIME/DIV	0.1 msec
VOLTS/DIV (CH1, CH2)	0.1V	A VARIABLE	CAL
VARIABLE (CH1, CH2)	CAL	HORIZ DISPLAY	A
AC-DC, GND (CH1, CH2)	DC	DELAY TIME MULT	Fully counterclockwise
CH2 POLAR	Out	TRACE SEPARATION	Fully counterclockwise
POSITION (CH3, CH4)	Mid-position	0.1V-1V (CH3, CH4)	0.1V
◄──► POSITION	Mid-position	AC-DC (CH3, CH4)	DC
FINE (PULL x10 MAG)	Push, Mid-position		

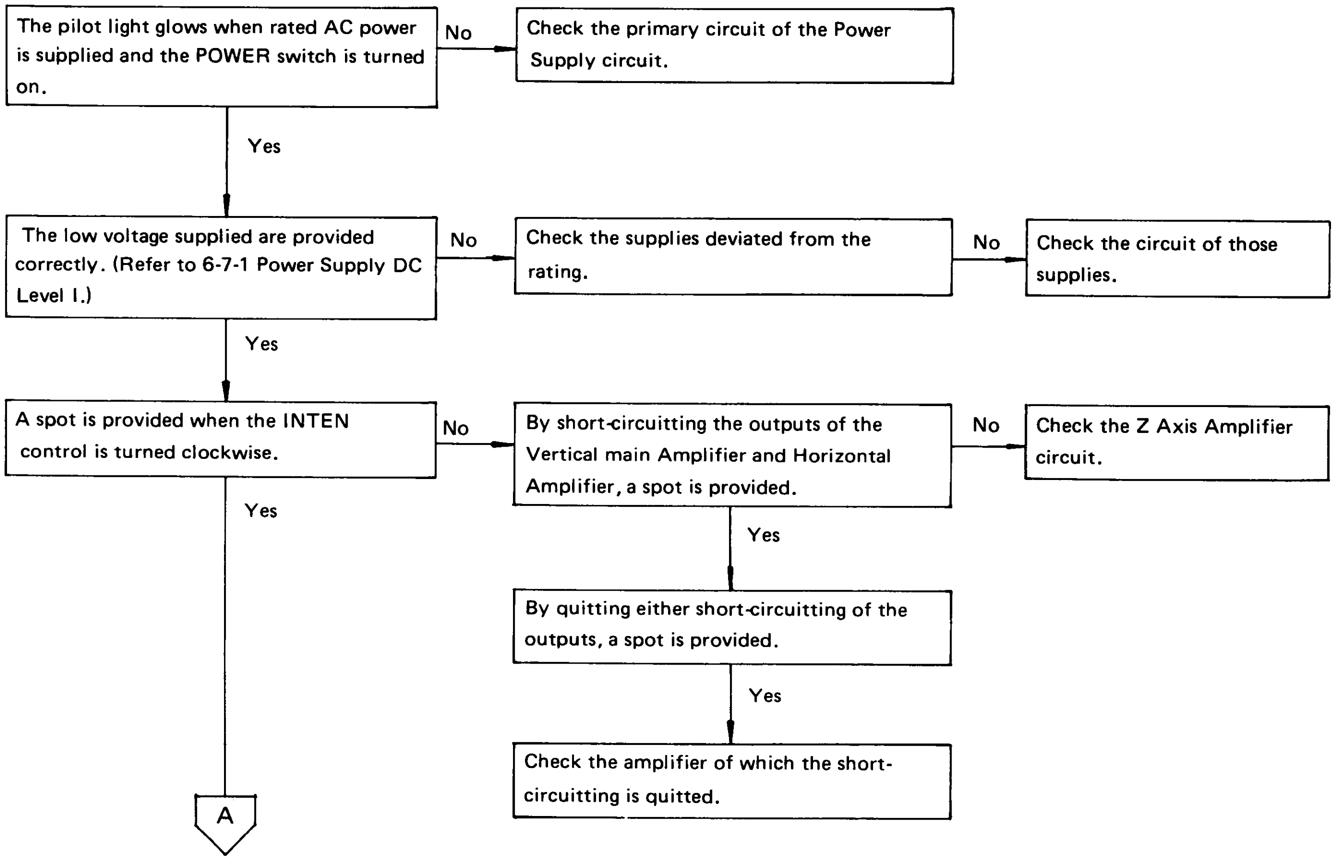

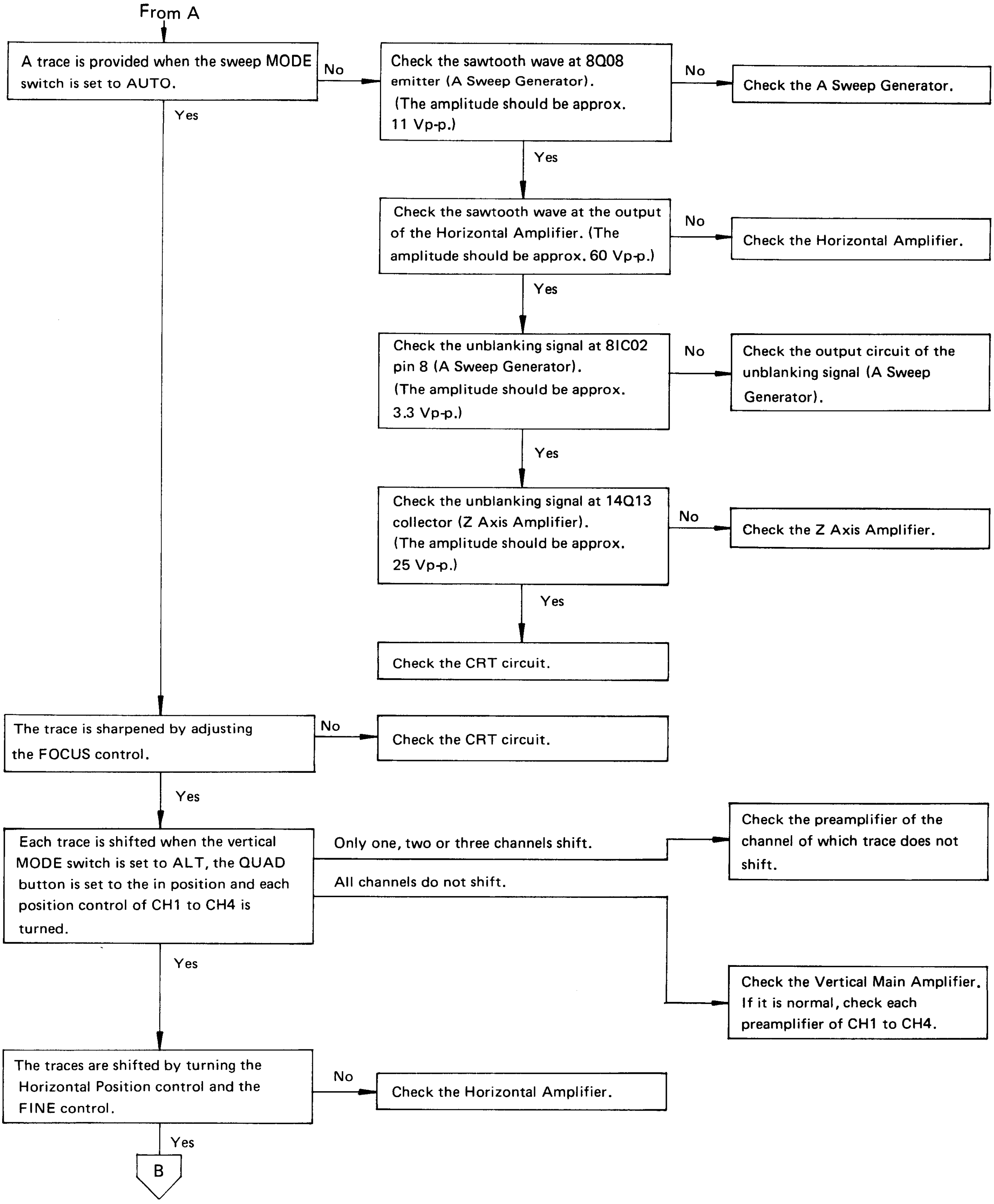
From A
A trace is provided when the sweep MODE switch is set to AUTO.
No
Check the sawtooth wave at 8Q08 emitter (A Sweep Generator). (The amplitude should be approx. 11 Vp-p.)
No
Check the A Sweep Generator.
Yes
Check the sawtooth wave at the output of the Horizontal Amplifier. (The amplitude should be approx. 60 Vp-p.)
No
Check the Horizontal Amplifier.
Yes
Check the unblanking signal at 8IC02 pin 8 (A Sweep Generator). (The amplitude should be approx. 3.3 Vp-p.)
No
Check the output circuit of the unblanking signal (A Sweep Generator).
Yes
Check the unblanking signal at 14Q13 collector (Z Axis Amplifier). (The amplitude should be approx. 25 Vp-p.)
No
Check the Z Axis Amplifier.
Yes
Check the CRT circuit.
Yes
The trace is sharpened by adjusting the FOCUS control.
No
Check the CRT circuit.
Yes
Each trace is shifted when the vertical MODE switch is set to ALT, the QUAD button is set to the in position and each position control of CH1 to CH4 is turned.
Only one, two or three channels shift.
Check the preamplifier of the channel of which trace does not shift.
All channels do not shift.
Check the Vertical Main Amplifier. If it is normal, check each preamplifier of CH1 to CH4.
Yes
The traces are shifted by turning the Horizontal Position control and the FINE control.
No
Check the Horizontal Amplifier.
Yes
B

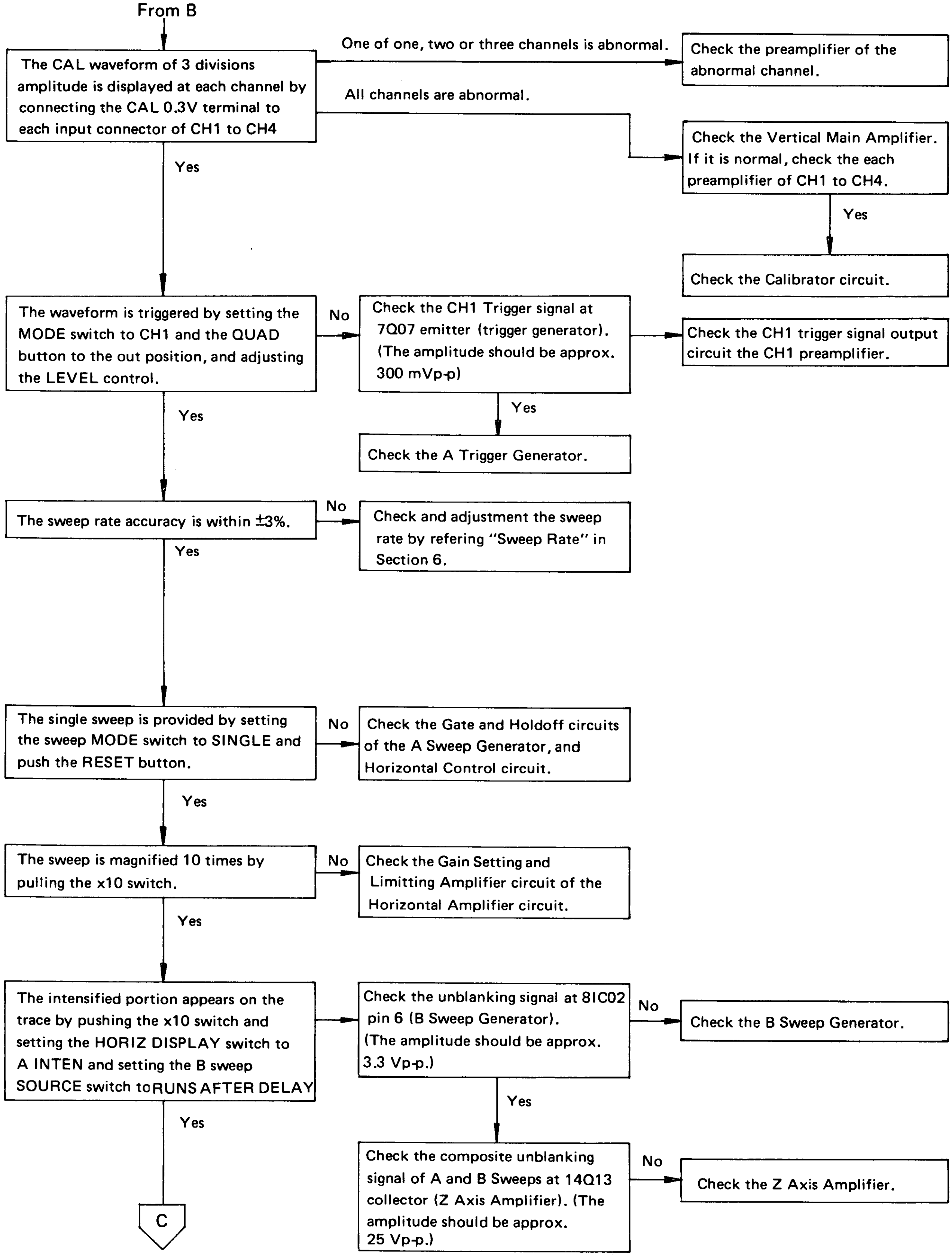

The CAL waveform of 3 divisions amplitude is displayed at each channel by connecting the CAL 0.3V terminal to each input connector of CH1 to CH4

Check the preamplifier of the abnormal channel.

Check the Vertical Main Amplifier. If it is normal, check the each preamplifier of CH1 to CH4.

Check the Calibrator circuit.

The waveform is triggered by setting the MODE switch to CH1 and the QUAD button to the out position, and adjusting the LEVEL control.

Check the CH1 Trigger signal at 7Q07 emitter (trigger generator). (The amplitude should be approx. 300 mVp-p)

Check the CH1 trigger signal output circuit the CH1 preamplifier.

Check the A Trigger Generator.

The sweep rate accuracy is within ±3%.

Check and adjustment the sweep rate by refering "Sweep Rate" in Section 6.

The single sweep is provided by setting the sweep MODE switch to SINGLE and push the RESET button.

Check the Gate and Holdoff circuits of the A Sweep Generator, and Horizontal Control circuit.

The sweep is magnified 10 times by pulling the x10 switch.

Check the Gain Setting and Limitting Amplifier circuit of the Horizontal Amplifier circuit.

The intensified portion appears on the trace by pushing the x10 switch and setting the HORIZ DISPLAY switch to A INTEN and setting the B sweep SOURCE switch to RUNS AFTER DELAY

Check the unblanking signal at 8IC02 pin 6 (B Sweep Generator). (The amplitude should be approx. 3.3 Vp-p.)

Check the B Sweep Generator.

Check the composite unblanking signal of A and B Sweeps at 14Q13 collector (Z Axis Amplifier). (The amplitude should be approx. 25 Vp-p.)

Check the Z Axis Amplifier.

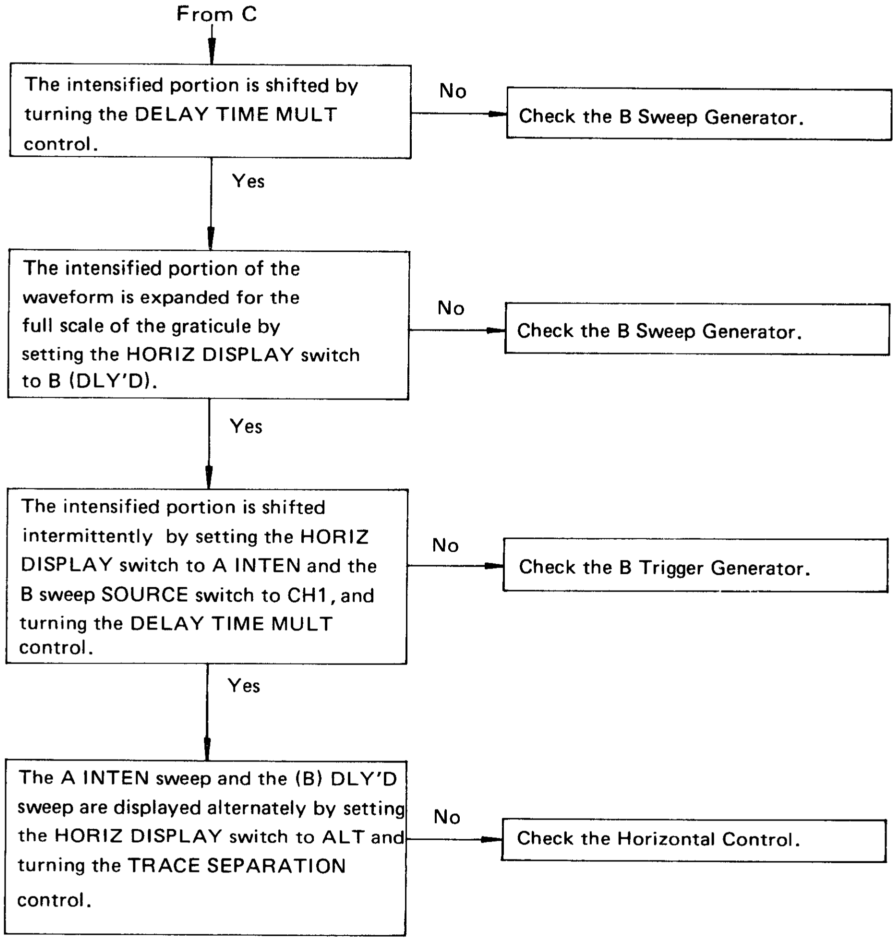

The intensified portion is shifted by turning the DELAY TIME MULT control.

Check the B Sweep Generator.

The intensified portion of the waveform is expanded for the full scale of the graticule by setting the HORIZ DISPLAY switch to B (DLY'D).

Check the B Sweep Generator.

The intensified portion is shifted intermittently by setting the HORIZ DISPLAY switch to A INTEN and the B sweep SOURCE switch to CH1, and turning the DELAY TIME MULT control.

Check the B Trigger Generator.

The A INTEN sweep and the (B) DLY'D sweep are displayed alternately by setting the HORIZ DISPLAY switch to ALT and turning the TRACE SEPARATION control.

Check the Horizontal Control.

Universal Counter Section

First, set the switches and controls as follows;

Function	Push, CHECK button	START	Counterclockwise
Range	0.01	STOP	Mid-position
HF-LF	Out		
EXT-INT	Out	Osilloscope	Refer to Oscilloscope Section

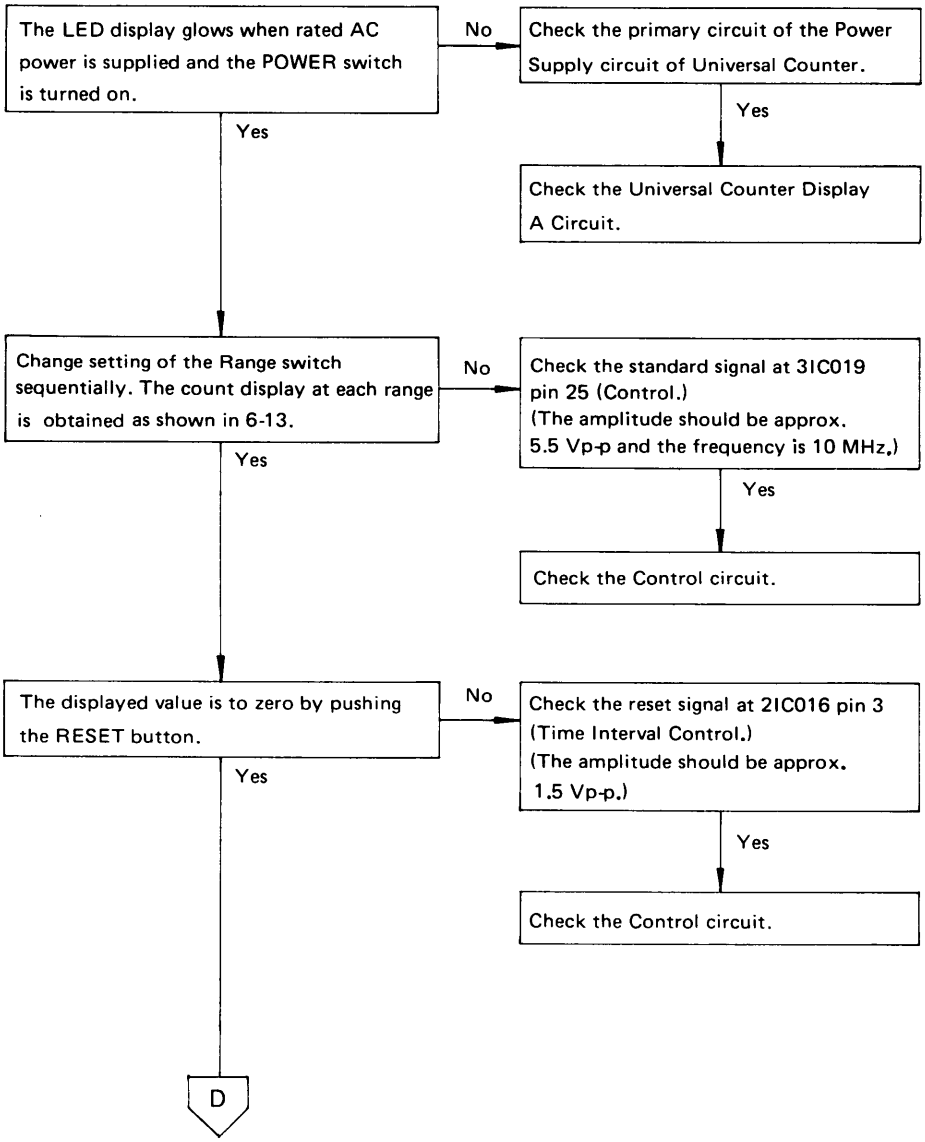

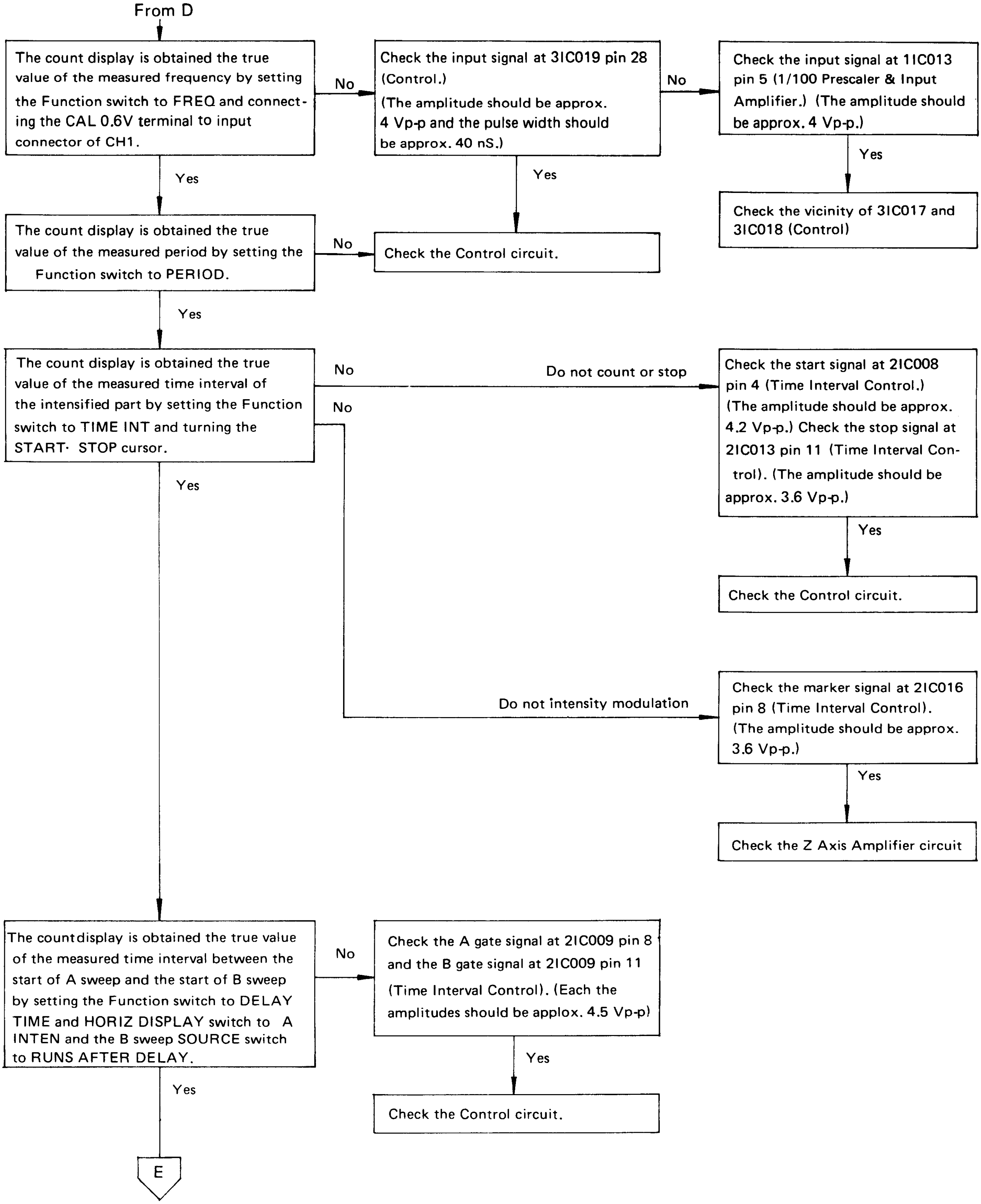

The count display is obtained the true value of the measured frequency by setting the Function switch to FREQ and connecting the CAL 0.6V terminal to input connector of CH1.

Check the input signal at 3IC019 pin 28 (Control.) (The amplitude should be approx. 4 Vp-p and the pulse width should be approx. 40 nS.)

Check the input signal at 1IC013 pin 5 (1/100 Prescaler & Input Amplifier.) (The amplitude should be approx. 4 Vp-p.)

Check the vicinity of 3IC017 and 3IC018 (Control)

The count display is obtained the true value of the measured period by setting the Function switch to PERIOD.

Check the Control circuit.

The count display is obtained the true value of the measured time interval of the intensified part by setting the Function switch to TIME INT and turning the START· STOP cursor.

Check the start signal at 2IC008 pin 4 (Time Interval Control.) (The amplitude should be approx. 4.2 Vp-p.) Check the stop signal at 2IC013 pin 11 (Time Interval Control). (The amplitude should be approx. 3.6 Vp-p.)

Check the Control circuit.

Check the marker signal at 2IC016 pin 8 (Time Interval Control). (The amplitude should be approx. 3.6 Vp-p.)

Check the Z Axis Amplifier circuit

The countdisplay is obtained the true value of the measured time interval between the start of A sweep and the start of B sweep by setting the Function switch to DELAY TIME and HORIZ DISPLAY switch to A INTEN and the B sweep SOURCE switch to RUNS AFTER DELAY.

Check the A gate signal at 2IC009 pin 8 and the B gate signal at 2IC009 pin 11 (Time Interval Control). (Each the amplitudes should be applox. 4.5 Vp-p)

Check the Control circuit.

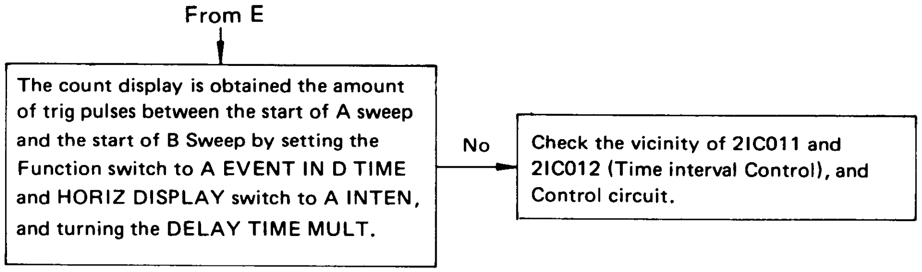

From E

The count display is obtained the amount of trig pulses between the start of A sweep and the start of B Sweep by setting the Function switch to A EVENT IN D TIME and HORIZ DISPLAY switch to A INTEN, and turning the DELAY TIME MULT.

No

Check the vicinity of 2IC011 and 2IC012 (Time interval Control), and Control circuit.

Digital Multi-meter Section

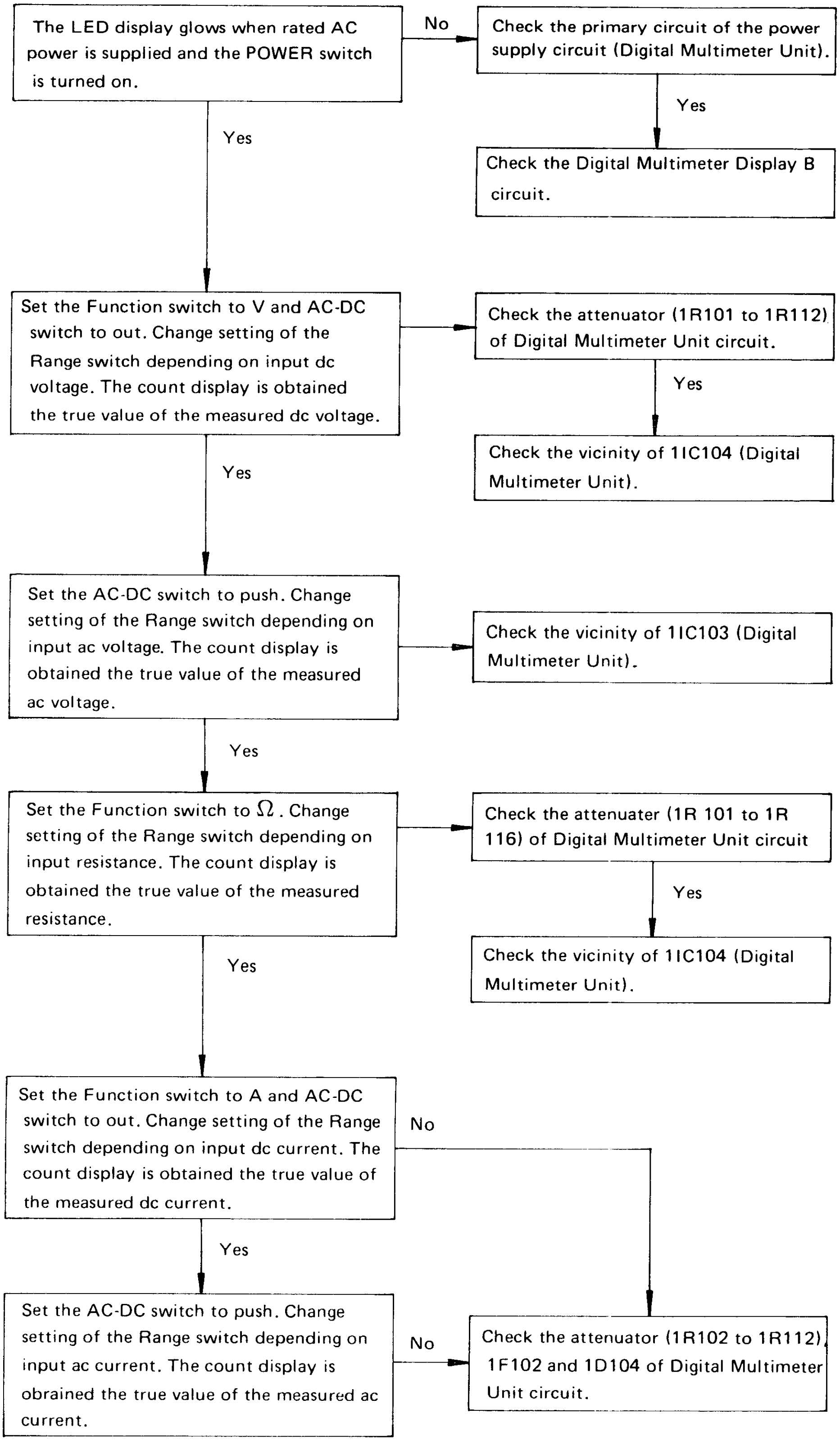

NOTES

Section 6

Check and Adjustment

6-1 GENERAL

Correct measurement requires the normal operation of each circuit in SS-5710D and satisfactory maintenance of their performance.

With the regular performance check and adjustment, SS-5710D can develop its functions in a reliable manner for a long period of service. This section describes the appropriate method of check and adjustment.

6-2 PERIOD OF CHECK AND ADJUSTMENT

The regular and periodical check and adjustment of performance is necessary for correct measurement. The proper check intervals for SS-5710D is one year.

6-3 PRECAUTIONS FOR CHECK AND ADJUSTMENT

For the performance check and adjustment, pay attention to the following:

a. In each check and adjustment items, the description for the control knob manipulation presupposes the setting completed for item 6-6 Preparation. Whether the check and adjustment are carried out for all items or for limited items, make sure to start the operation from the point where the setting has been made according to the preparation for check and adjustment.
b. Some signal generator outputs at a 50 Ω termination; so using a coaxial cable with characteristic impedance of 50 Ω (e.g. BB-120 by Iwatsu), terminate the cable end at the scope side with a 50 Ω terminator (e.g. BB-50M1 by Iwatsu).
c. The low-voltage power is supplied to all circuits. If its voltage or ripple goes outside the specified values, then other performance will be affected. In check and adjustment, therefore, check the low-voltage power supply first.
d. The CRT has a high-voltage. For its check and adjustment, be careful not to catch an electric shock.
e. The adjuster has the circuit numbers. To make the circuit clear, the number in the boxes of the circuit diagrams are described before the circuit number.

6-4 EQUIPMENT REQUIRED

The check and adjustment requires the equipment and accessories as described in table 6-4-1. The equipment must have the performance equal to or greater than those described in the table. The signal input connector of SS-5710D is BNC. If the terminator or signal output terminal is other than BNC, prepare a converter connector.

Table 6-4-1 List of equipment required

Equipment	Minimum Specifications	Purpose	Recommended Model
Scope calibrator • Standard-amplitude signal level • Time-mark generator • Sine wave generator • Square wave generator • Fast rise signal generator	 : 6mV to 60V ±0.5% or less : 20nsec to 2 sec ±0.05% or less : 1kHz ± 20% Frequency range : 50Hz to 200kHz Rise time : 5nsec or less Repetition : 50Hz to 200kHz Rise time : 0.35nsec or less	Vertical, triggering and horizontal checks and adjustments	Iwatsu SC-340 TEKTRONIX PG506 Calibration Generator TG501 Time-Mark Generator (TM500-series power module mainframe is needed)
Standard signal generator	Frequency : 50kHz to 60MHz Output level : 60mV or more	Bandwidth and phase difference checks and adjustments	HP 8654A/B TEKTRONIX SG503 Leveled Sine-Wave Generator
Digital volt-meter	Range : DC to 200VDC ± 0.05% + 1 dgt	Power supply checks and adjustments	Iwatsu VOAC747 HP 3465A/B
High-voltage probe (For digital volt-meter	Range : DC to 15kVDC ± 3% + 1 dgt	High-voltage power supply check and adjustment	Iwatsu High-voltage probe HP 34111A
Test Oscilloscope and x1 probe (x1 probe is optional accessory)	Bandwidth : DC to 1MHz Minimum defection factor: 1mV/div	Power supply ripple check and general troubleshooting	a. Iwatsu SS-5212 TEKTRONIX 213 Oscilloscope b. Iwatsu SS-0001/0002 TEKTRONIX P6101 Probe (x1)

Table 6-4-1 List of equipment required (cont.)

Equipment	Minimum Specifications	Purpose	Recommended Model
Frequency counter	Range: 10Hz to 1.5MHz Resolution: 1Hz	Repetition rate of calibrator check	Iwatsu SC-7101 HP 5300/5301A
Voltage regulator		AC line voltage range check	
Termination (2 required)	Impedance: 50 Ω	Signal termination	Iwatsu BB-50MI
x10 Attenuator	Ratio: x10 Impedance: 50 Ω	Vertical compensation and triggering check	Iwatsu AA-20B
x2 Attnuator	Ratio: x2 Impedance: 50 Ω	Vertical compensation and triggering check	Iwatsu AA-06B
Divider		Signal interconnection	Iwatsu B-50D3
Cable (2 required)	Impedance: 50 Ω Length: 120mm	Signal interconnection	Iwatsu BB-120C
Supplied x 10 probe		Signal interconnection	Iwatsu SS-0011
Screwdriver		Adjust variable resistors and capacitors	Iwatsu Probe accessory

6-5 CHECK AND ADJUSTMENT ITEMS

The check and adjustment items are shown in Table 6-5-1.
The right column indicates items that may be affected by adjustment.
Together with one item, also check and adjust other items that may be affected by that item.
In check and adjustment of all items, do them in the following sequence:

Table 6-5-1 Items and interactions

Order	Checks and adjustments items	Page	Checks and adjustments affected
	Power supply and CRT		
1	6-7-1 Power supply DC leve I (voltage range)	6-6	All items
2	6-7-2 Power supply DC level II (ripple voltage)	6-7	
3	6-7-3 AC line voltage range	6-8	
4	6-7-4 High-voltage power supply	6-9	All items
5	6-7-5 Intensity	6-10	6-7-6
6	6-7-6 Focus	6-11	
7	6-7-7 Pattern distortion	6-12	6-9-1, 6-9-2, 6-11-1, 6-11-3, 6-11-8
	Calibrator output		
8	6-8-1 Output voltage	6-14	
9	6-8-2 Repetition rate	6-15	
	Vertical deflection system		
10	6-9-1 x5 balance	6-16	6-9-2, 6-9-4, 6-9-8 to 6-9-11, 6-10-1, 6-10-2, 6-12-1
11	6-9-2 VARIABLE balance	6-16	6-9-1, 6-9-3, 6-9-4, 6-9-8 to 6-9-11, 6-10-1, 6-10-2, 6-12-1
12	6-9-3 Deflection factor I (CH1 • CH2)	6-17	6-9-1, 6-9-2, 6-9-4, 6-9-8 to 6-9-20, 6-10-1, 6-10-2, 6-12-1
13	6-9-4 CH2 polarity balance and position center	6-19	6-9-1 to 6-9-3, 6-9-6, 6-9-8 to 6-9-11, 6-10-1, 6-10-2, 6-12-1
14	6-9-5 Attenuator compensation I (CH1 • CH2)	6-20	
15	6-9-6 Deflection factor II (CH3 • CH4)	6-22	
16	6-9-7 Attenuator compensation II (CH3 • CH4)	6-23	
17	6-9-8 Square wave response I (Sag)	6-24	
18	6-9-9 Square wave response II (Overshoot and others)	6-26	6-9-10
19	6-9-10 Bandwidth	6-28	
20	6-9-11 Linearity	6-29	

Table 6-5-1 Items and interactions (cont.)

Order	Checks and adjustments items	Page	Checks and adjustments affected
	Trigger system		
21	6-10-1 A triggering	6-30	
22	6-10-2 B triggering	6-31	
	Horizontal deflection system		
23	6-11-1 Sweep rate	6-32	6-11-2 to 6-11-7, 6-12-1, 6-12-2
24	6-11-2 Magnification center	6-34	6-11-5, 6-12-1
25	6-11-3 Magnified sweep rate	6-35	6-12-1
26	6-11-4 Sweep trace length	6-36	
27	6-11-5 B sweep start	6-37	
28	6-11-6 Start and stop of delay	6-38	
29	6-11-7 Jitter	6-40	
	X-Y operation		
30	6-12-1 Deflection factor and intensity level	6-42	
31	6-12-2 Phase difference	6-43	

Precaution

Open the page to the left and refer to the contents when making check and adjustment of each item.

Switches and controles	Setting
POWER	OFF
INTEN	Slightly right of the midrange
FOCUS	Midrange
SCALE	Full clockwise turn
VERTICAL MODE	CH1
↕ POSITION (PULL x5 MAG) (CH1 • 2)	Midrange (Push)
VOLTS/DIV (CH1 • 2)	5 mV
VARIABLE (CH1 • 2)	CAL
AC-DC (CH1 •2)	DC
GND (CH1 • 2)	OUT
CH2 POLAR	NORM
↕ POSITION (CH3 • 4)	Midrange
↔ POSITION	Midrange
FINE (PULL x10 MAG)	Midrange (Push)
COUPLING (A • B)	AC
SOURCE (A • B)	CH1
HOLDOFF	NORM
HORIZONTAL MODE	AUTO
LEVEL SLOPE (PULL –) (A • B triggering)	Midrange (Push)
A TIME/DIV	1 mS
A VARIABLE	CAL
HORIZ DISPLAY	A
DELAY TIME MULT	Full counter-clock-wise turn

6-6 PREPARATION

Before making check and adjustment, prepare the following:

a. Set the ambient temperature at 23°C ± 5°C.

b. Before turning the power on, set the switches and control knobs as shown in the table at the left.

c. Set the voltage switch on the rear panel to meet the line voltage. Connect the power cord to the plug socket of the line. If the line voltage is outside the operating range of SS-5710, set the voltage within the range using a voltage regulator.

d. Turn POWER switch on to supply power, adjust INTEN to provide the proper intensity and trace, and keep the condition for about 30 minutes to warm up the machine.

6-7 POWER SUPPLY AND CRT CHECK AND ADJUSTMENT

6-7-1 Power Supply DC Level I (Voltage Range)

<table>
<tr><th>Item</th><th>Description</th></tr>
<tr><td>Rating</td><td>
<table>
<tr><th>DC power voltage</th><th>Output voltage range</th></tr>
<tr><td>- 10V</td><td>Within ±0.05V</td></tr>
<tr><td>+ 10V</td><td>Within ±0.15V</td></tr>
<tr><td>+ 47V</td><td>Within ±0.94V</td></tr>
<tr><td>+ 100V</td><td>Within ±4 V</td></tr>
<tr><td>+ 5V</td><td>Within ±0.25V</td></tr>
</table>
</td></tr>
<tr><td>Check and Adjustment</td><td>Measure the voltage across the measurement position (see figure 6-7-2) and the ground and check that the values is within the rated values. If the voltage is outside the rated value, adjust "-10V" with 13R41 -10V ADJ (see figure 6-7-2). Check voltages at other locations again.
Note: The design is such that by adjusting -10V, other voltages can be set within the specification range.</td></tr>
<tr><td>Related Items</td><td>All items</td></tr>
</table>

6-7-2 Power Supply DC Level II (Ripple voltage)

<table>
<tr><th>Item</th><th>Description</th></tr>
<tr><td>Rating</td><td><table>
<tr><th>DC power voltage</th><th>Ripple voltage</th></tr>
<tr><td>- 10V</td><td rowspan="2">0.5 mVp-p or less</td></tr>
<tr><td>+ 10V</td></tr>
<tr><td>+ 47V</td><td>1 mVp-p or less</td></tr>
<tr><td>+ 100V</td><td>2 mVp-p or less</td></tr>
<tr><td>+ 5V</td><td>20 mVp-p or less</td></tr>
</table></td></tr>
<tr><td>Setting</td><td>Stop the sweep by setting HORIZ mode to SINGLE.</td></tr>
<tr><td>Check</td><td>Connect a x 1 probe to the oscilloscope and check the ripple voltage or each power supply.</td></tr>
<tr><td>Related items</td><td>All items</td></tr>
</table>

6-7-3 AC Line Voltage Range

<table>
<tr><th>Item</th><th colspan="2">Description</th></tr>
<tr><td>Rating</td><td colspan="2">The CRT waveform must be sufficienty stable within the voltage range shown in the right.
Table
<table>
<tr><th>Set position</th><th>Center voltage</th><th>Voltage range</th><th>Fuse used</th></tr>
<tr><td>A</td><td>100V</td><td>90 to 110V</td><td>1 A slow-blow fuse</td></tr>
<tr><td>B</td><td>115V</td><td>103 to 128V</td><td></td></tr>
<tr><td>C</td><td>220V</td><td>195to 242V</td><td>0.5A slow-blow fuse</td></tr>
<tr><td>D</td><td>230/240V</td><td>207 to 264V</td><td></td></tr>
</table></td></tr>
<tr><td>Connection</td><td colspan="2">SS-5710
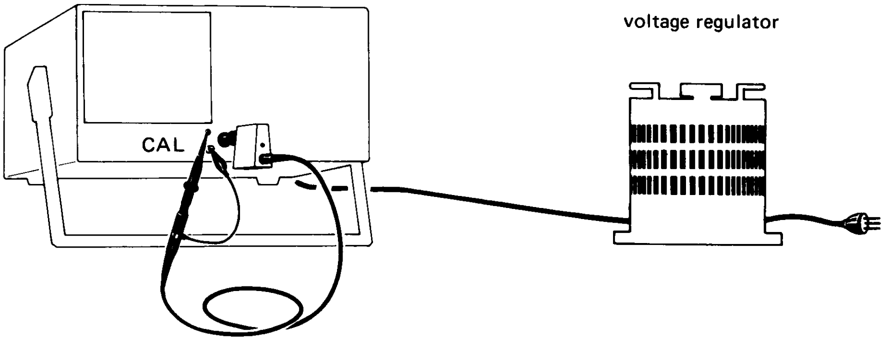
 </td></tr>
<tr><td>Setting</td><td colspan="2">With A TIME/DIV being set to 10ms, swing the amplitude 6 div.</td></tr>
<tr><td>Check</td><td colspan="2">PRECAUTION
In exchange of the power switching plug or replacing fuses, remove the power cord from the line plug socket. When exchanging the voltage plug, remove the rear panel.
Using a voltage regulator, change the AC supply voltage continuously in the rated range, and check that ripple or intensity modulation does not appear on the CRT waveform.</td></tr>
<tr><td>CRT waveform</td><td>Normal waveform
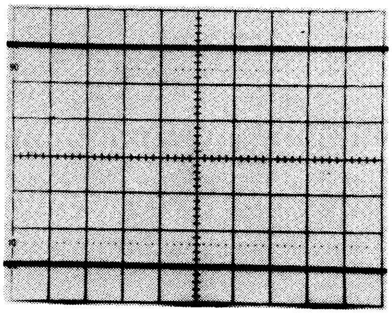</td><td>Abnormal waveform
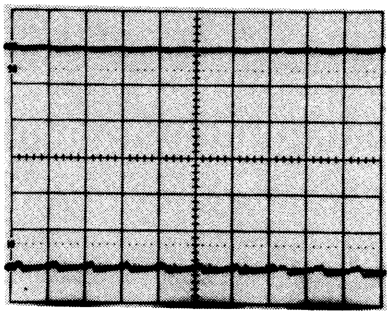</td></tr>
</table>

6-7-4 High-Voltage Power Supply

Item	Description
Rating	The voltage between the CRT cathode and ground must be within -2.45kV ±5%.
Check and Adjustment	**PRECAUTION** If the error of the CRT cathode voltage is within ±5%, do not make adjustment, except when all items are adjusted. Using a digital multimeter (with a high-voltage probe), measure the voltage between the CRT cathode and the ground (see figure 6-7-1), and check that the voltage is within –2.45 kV ± 5%. If the result is outside the rated value, adjust the voltage with 14R07 HV ADJ (see figure 6-7-2).
Related items	All items

Figure 6-7-1. Testpoint Location (CATHODE of CRT)

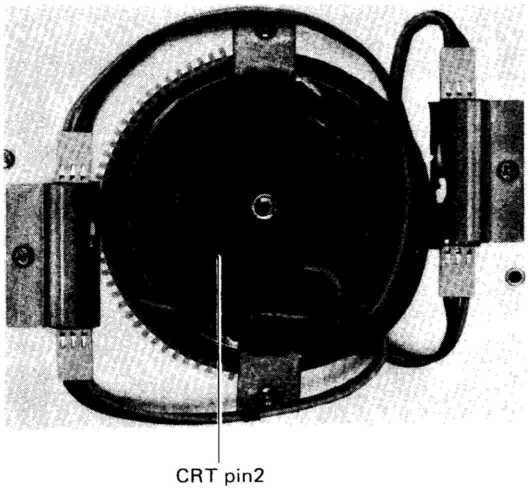

6-7-5 Intensity

<table>
<tr><th>Item</th><th>Description</th></tr>
<tr><td>Rating</td><td>With INTEN being set midrange, the proper intensity trace must appear; with the INTEN full counter-clockwise turn, the trace must disappear.</td></tr>
<tr><td>Setting</td><td>
<table>
<tr><th colspan="2">SS-5710</th><th rowspan="2">Trace or spot</th></tr>
<tr><th>HORIZ DISPLAY</th><th>INTENT position</th></tr>
<tr><td rowspan="2">A</td><td>Midrange</td><td>Proper trace</td></tr>
<tr><td>Full counter-clockwise turn</td><td>Trace disappears</td></tr>
<tr><td>X-Y</td><td>Full clockwise turn</td><td>Trace appears</td></tr>
</table>
</td></tr>
<tr><td>Check and adjustment</td><td>If the check result shows an improper intensity, adjust it with 14R17 INTEN ADJ (see figure 6-7-2).</td></tr>
<tr><td>Related items</td><td>6-7-6</td></tr>
</table>

6-7-6 Focus

Item	Description
Rating	Good convergence in both ranges of 60° from the midrange of the FOCUS control.
Connection	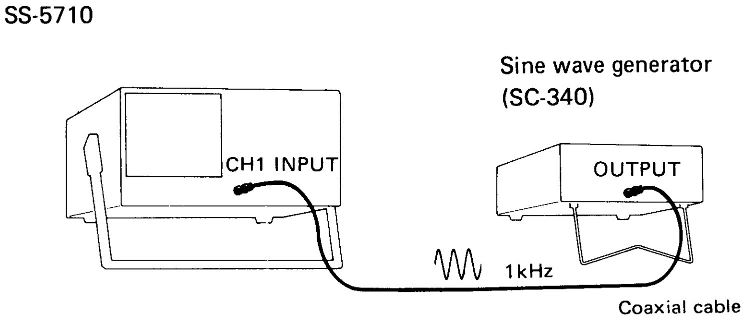
Setting	Swing the amplitude by 6 div.
Check and adjustment	Check that the convergence is good on both ranges 60° from the midrange of FOCUS control. If the convergence is not good, adjust it with 14R21 ASTIG (see figure 6-7-2).
Related items	6-7-5.

6-7-7 Pattern Distortion

SS-5710

<table>
<tr><th>Item</th><th>Description</th></tr>
<tr><td>Rating</td><td>The vertical and horizontal deflection of trace are within the range shown in the figure at the right.
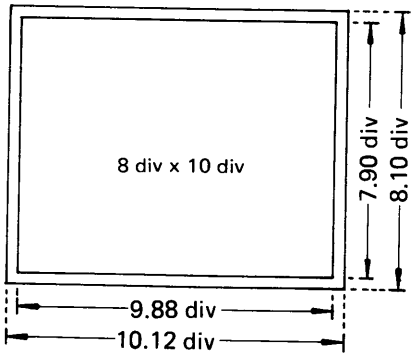 </td></tr>
<tr><td>Connection</td><td>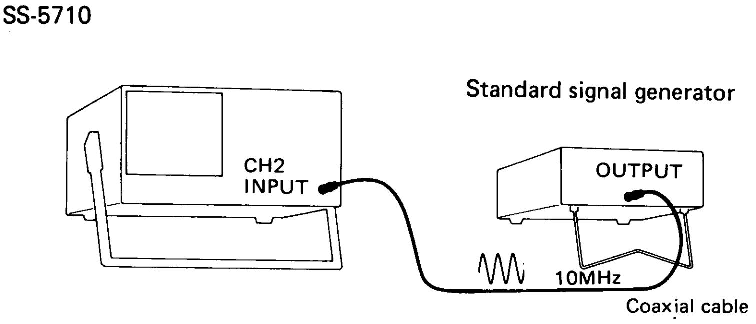 </td></tr>
<tr><td>Setting</td><td>
<table>
<tr><th rowspan="2">Sequence</th><th colspan="2">SS-5710</th><th colspan="2">Input signal</th><th rowspan="2">Amplitude on CRT screen</th></tr>
<tr><th>Channel</th><th>HORIZ DISPLAY</th><th>Waveform</th><th>Frequency</th></tr>
<tr><td>1</td><td rowspan="2">CH2</td><td>A</td><td>–</td><td>–</td><td>8 div or more</td></tr>
<tr><td>2</td><td>X-Y</td><td>Sine</td><td>1kHz</td><td>10 div or more</td></tr>
</table>
</td></tr>
<tr><td>Check and adjustment</td><td>1. Check the horizontal deflection of trace on the top and bottom of scale.
2. Check the vertical deflection of trace on the right and left ends of scale.
If the check result shows a great distortion, adjust it with 14R20 GEOMETRY (see figure 6-7-2).</td></tr>
<tr><td>Related items</td><td>6-9-1, 6-9-2, 6-11-1, 6-11-3, 6-12-1</td></tr>
</table>

6-7-7 Pattern Distortion (Cont.)

Item	Description
CRT waveform	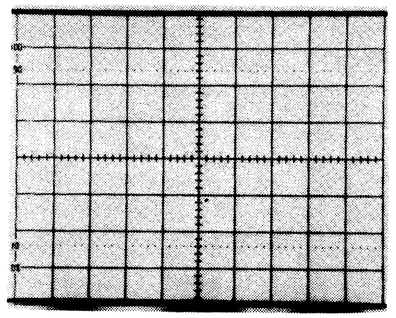 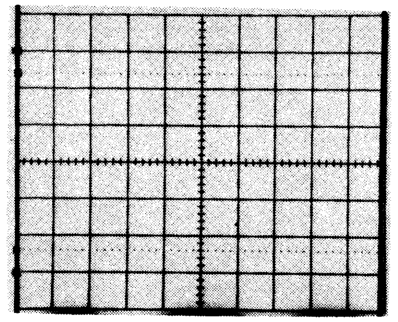

Figure 6-7-2. Adjustment and Testpoint Locations (POWER SUPPLY and CRT)

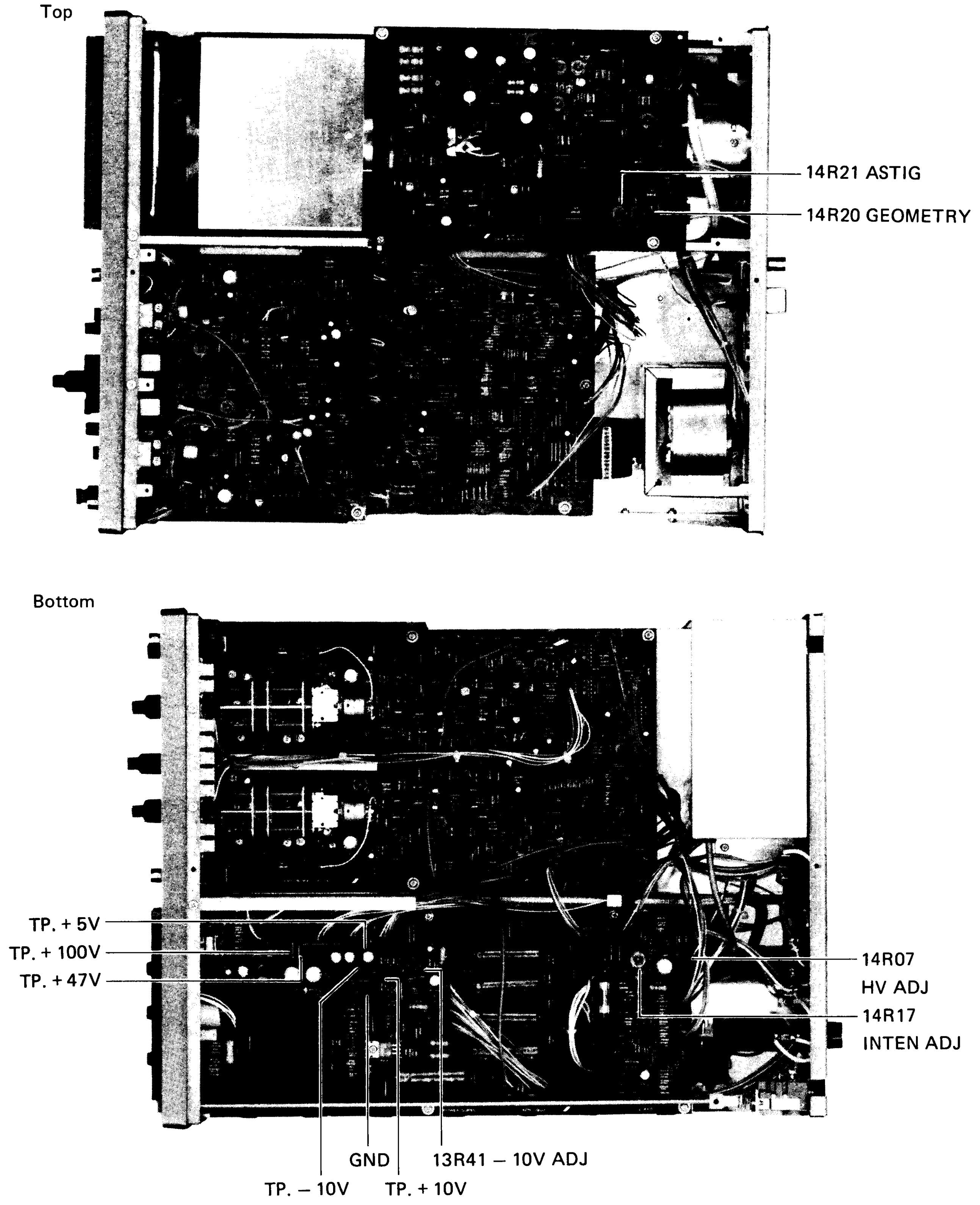

6-8 CALIBRATOR OUTPUT

6-8-1 Output Voltage

<table>
<tr><th>Item</th><th>Description</th></tr>
<tr><td>Rating</td><td>0.3V ± 1%</td></tr>
<tr><td>Connection</td><td>SS-5710
(1)
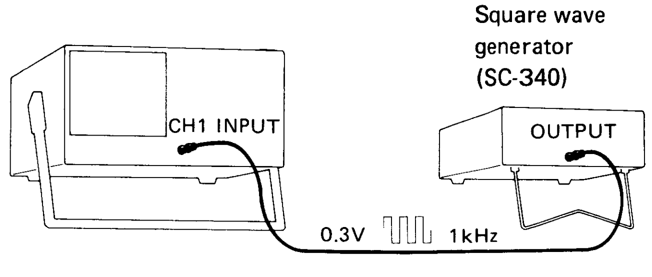 </td></tr>
<tr><td></td><td>SS-5710
(2)
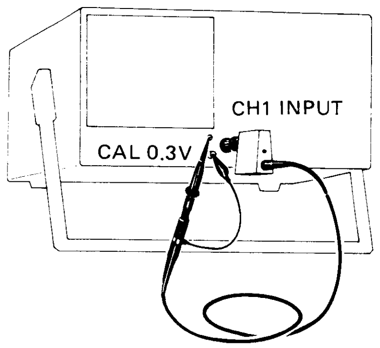 </td></tr>
<tr><td>Setting</td><td>
<table>
<tr><th colspan="2">SS-5710</th><th colspan="3">Input signal</th><th rowspan="2">Amplitude on CRT screen</th></tr>
<tr><th>Channel</th><th>VOLTS/DIV</th><th>Voltage</th><th>Waveform</th><th>Frequency</th></tr>
<tr><td rowspan="2">CH1</td><td rowspan="2">50 mV</td><td>0.3V</td><td>Square wave</td><td>1kHz</td><td>6 div</td></tr>
<tr><td></td><td>CAL</td><td></td><td>6 div ± 1%</td></tr>
</table>
</td></tr>
<tr><td>Chack and adjustment</td><td>Make connection as shown in connection (1) and adjust 2R30 CH1 GAIN so that the amplitude on CRT screen is 6 div. Then connect as shown in connection (2) and check that the amplitude is within 6 div ± 1%.
If the check result is outside the rated values, adjust is with 13R14 CAL ADJ (see figure 6-8-1).</td></tr>
</table>

6-8-2 Repetition Rate

Item	Description
Rating	1kHz ± 30%.
Connection	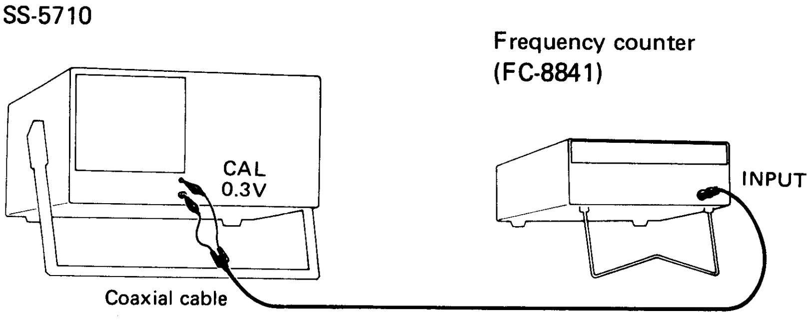
Check	Check that the calibrated value is within 1kHz ± 30%.

Figure 6-8-1. Adjustment locations (CALIBRATOR OUT)

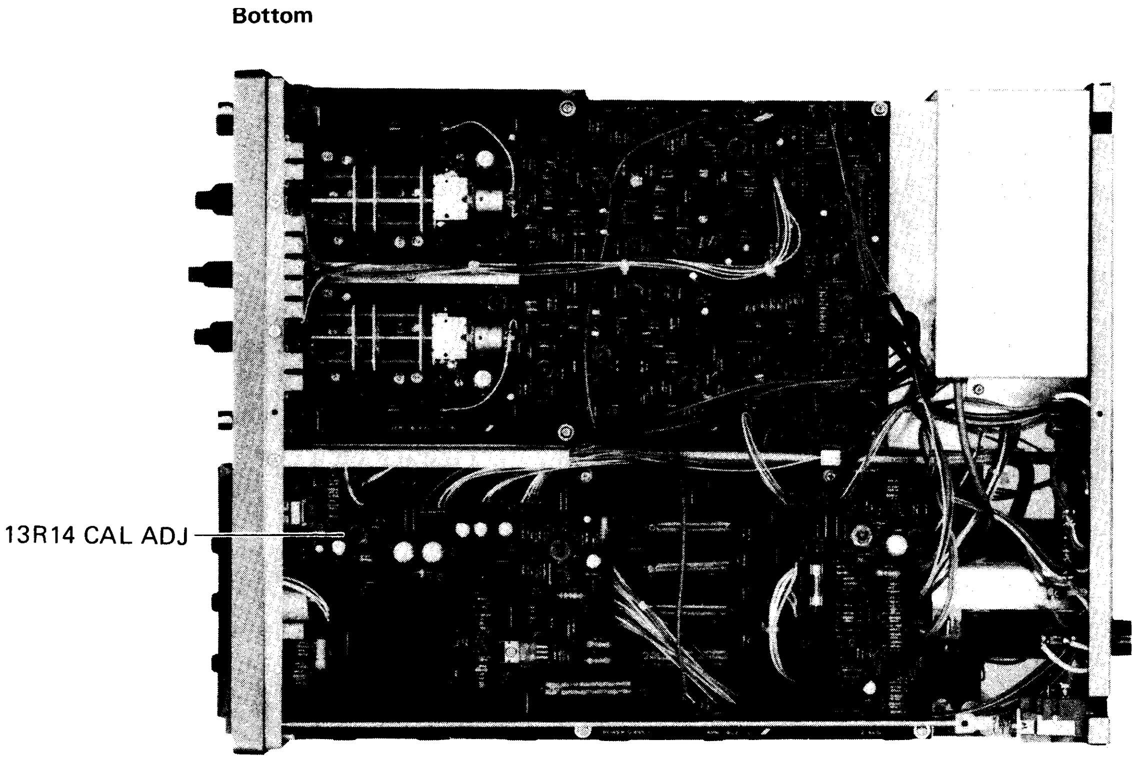

6-9 VERTICAL DEFLECTION SYSTEM CHECK AND ADJUSTMENT

6-9-1 x5 Balance

Item	Description
Setting	Set GNDs of CH1 • CH2 to IN (push).
Check and adjustment	Turn pull x5 MAG by push-pull and check that the trace does not move. If CH1 moves, adjust is with 2R01 CH1 BAL ADJ; if CH2 moves, adjust it with 3R01 CH2 BAL (see figure 6-9-2).
Related items	6-9-2, 6-9-4, 6-9-8, 6-9-10, 6-9-11, 6-10-1, 6-10-2, 6-12-1

6-9-2 Variable Balance

Item	Description
Setting	Set GNDs of CH1 • CH2 to IN (Push).
Check and adjustment	Change VARIABLE and check that the trace does not move. If CH1 moves, adjust it with 2R22 CH1 VAR BAL (see figure 6-9-2); if CH2 moves, adjust it with 3R22 CH2 VAR BAL (see figure 6-9-2).
Related items	6-9-1, 6-9-3, 6-9-4, 6-9-8, 6-9-10, 6-9-11, 6-10-1, 6-10-2, 6-12-1

6-9-3 Deflection Factor I (CH1 · CH2)

Item	Description
Rating	At x 1: ± 2% At x 5: ± 4%
Connection	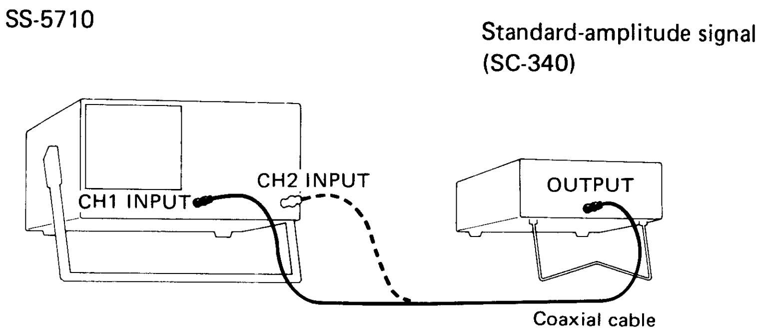
Setting	

Sequence	SS-5710		Input signal	Amplitude on CRT screen	Calibrator	
	Channel	VOLTS/DIV	Voltage		Cricuit No.	Name
1	CH1	5 mV	30 mV	6 div ± 2%	2R30	CH1 GAIN
	CH2				3R30	CH2 GAIN
2	CH1	5 mV*	6 mV	6 div ± 4%	2R06	CH1 x 5 GAIN
	CH2				3R06	CH2 x 5 GAIN
3	CH1 • CH2	10 mV*	12 mV		–	–
		10 mV	60 mV	6 div ± 2%		
		20 mV	120 mV			
		50 mV	0.3 V			
		0.1 V	0.6 V			
		0.2 V	1.2 V			
		0.5 V	3 V			
		1 V	6 V			
		2 V	12 V			
		5 V	30 V			
		10 V	60 V			

* (PULL x 5 MAG) pulled out.

6-9-3 Deflection Factor I (Cont.)

Item	Description
Check and adjustment	1. Check that the amplitude of CRT waveform is within ± 2%. If the check result shows that CH1 has a great error, adjust 2R30 CH1 GAIN (see figure 6-9-2); if CH2 has a great error, adjust 3R30 CH2 GAIN (see figure 6-9-2). 2. Set VOLTS/DIV to 1mV (pull " X 5MAG" and input voltage to 6mV, and check that the amplitude of CRT waveform is within 6 div ± 4%. If the check result shows that CH1 has a great error, adjust 2R06 CH1 x 5 GAIN (see figure 6-9-2); if CH2 has a great error, adjust 3R06 CH2 x 5 GAIN (see figure 6-9-2). 3. Then check the amplitude by switching VOLTS/DIV and input voltage. **PRECAUTION** Item 6-9-1, 6-9-2, and 6-9-3 affect one another, so repeat the adjustment for these items. By adjusting items 1 and 2, the 2mV, 10mV, and succeeding ranges can be set within the rated values.
Related items	6-9-1, 6-9-2, 6-9-4, 6-9-8 to 6-9-11, 6-10-1, 6-10-2, 6-12-1

6-9-4 CH2 Polarity Balance and Position Center

Item	Description
Setting	Set CH1 • CH2 GNDs to IN (push).
Check and adjustment	Switch CH2 POLAR to INV • NORM and check that the trace motion is within ± 2 div. If the check result shows a great movement, adjust it with 3R71 CH2 POL BAL (see figure 6-9-2). Then, set CH2 ↕ POSITION to the midrange. If the trace is not positioned on the horizontal center line, adjust it with 5R46 POS CENT (see figure 6-9-2).
Related items	6-9-1 to 6-9-3, 6-9-6, 6-9-8 to 6-9-11, 6-10-1, 6-10-2, 6-12-1

6-9-5 Attenuator Compensation I (CH1 · CH2)

<table>
<tr><th>Item</th><th>Description</th></tr>
<tr><td>Rating</td><td>Through Within ± 2%
Probe Within ± 3%</td></tr>
<tr><td>Connection</td><td>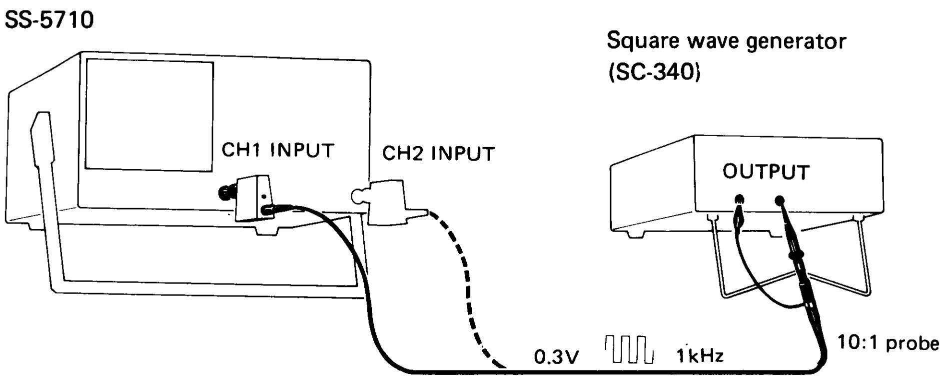
</td></tr>
<tr><td>Setting</td><td>
<table>
<tr><th rowspan="2">Sequence</th><th>SS-5710</th><th colspan="3">Input signal</th><th rowspan="2">Amplitude on CRT screen</th></tr>
<tr><th>Channel</th><th>Voltage</th><th>Waveform</th><th>Frequency</th></tr>
<tr><td>1</td><td rowspan="2">CH1 • CH2</td><td>0.3V</td><td rowspan="2">Square wave</td><td rowspan="2">1kHz</td><td>6 div</td></tr>
<tr><td>2</td><td>Set to VOLTS/DIV</td><td>Amplitude easy to observe</td></tr>
</table>
</td></tr>
<tr><td>Check and adjustment</td><td>1. Check the flatness of the square wave. If the flatness is improper, adjust the phase of "x10 probe" with the variable capacitor.
2. Switch the VOLTS/DIV and input voltage, and check and adjust the phase of the attenuator with respective variable capacitors (see figure 6-9-1).
Note: The design is such that the above adjustment sets other ranges in the rated values.</td></tr>
<tr><td>Related items</td><td>6-9-8, 6-9-9, 6-9-10, 6-9-11</td></tr>
</table>

6-9-5 Attenuator Compensation I (Cont.)

Item	Description
CRT waveform	Through compensation 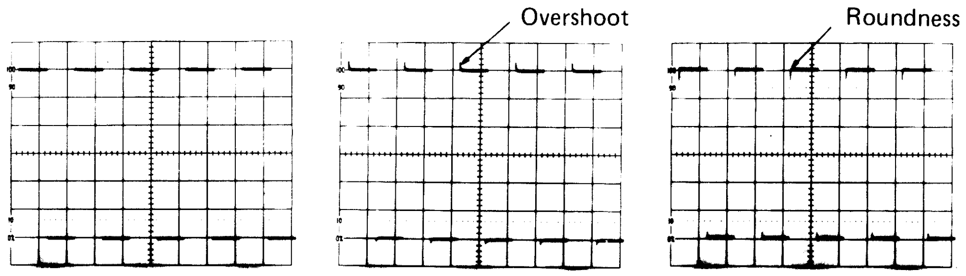 Correct compensation Over compensation Under compensation
	Probe compensation 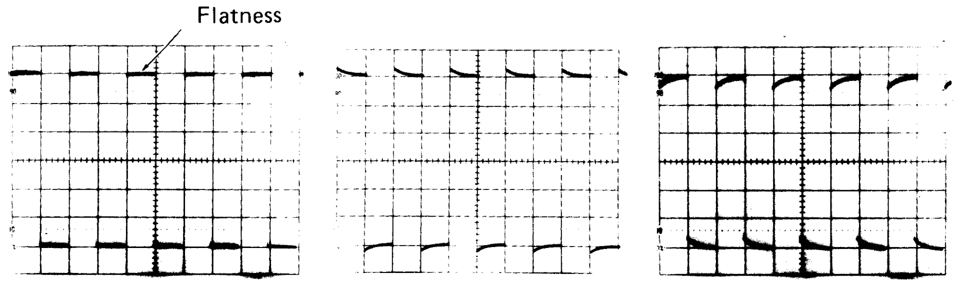 Correct compensation Over compensation Under compensation

Figure 6-9-1. Adjustment location (Attenuator compensation)

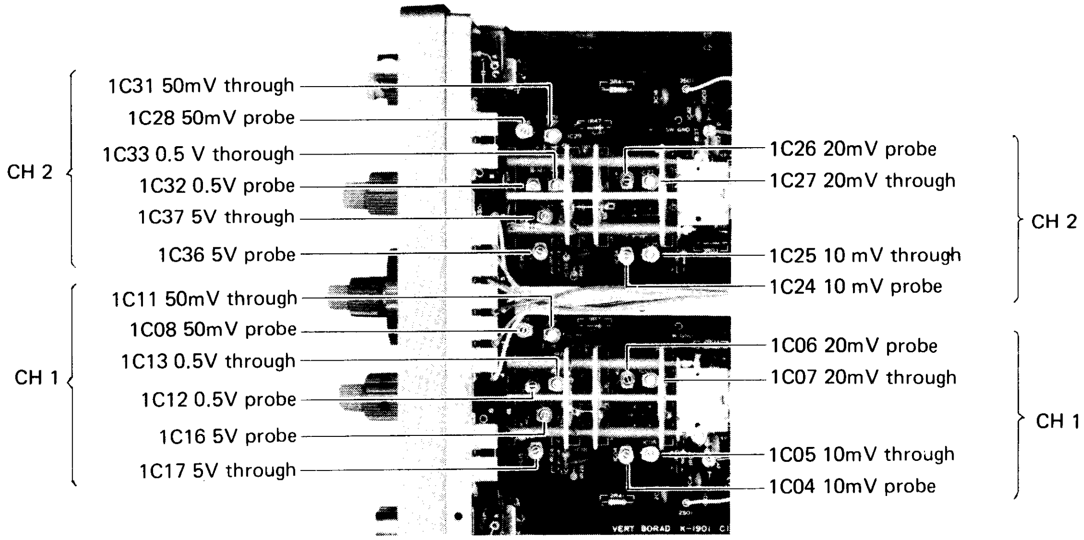

6-9-6 Deflection Factor II (CH3 · CH4)

<table>
<tr><th>Item</th><th>Description</th></tr>
<tr><td>Rating</td><td>± 4%</td></tr>
<tr><td>Connection</td><td>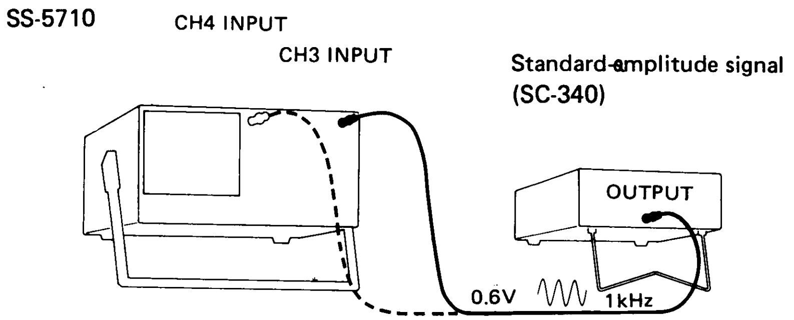
</td></tr>
<tr><td>Setting</td><td>
<table>
<tr><th colspan="3">SS-5710</th><th rowspan="2">Input signal Voltage</th><th rowspan="2">Amplitude on CRT screen</th><th colspan="2">Calibrator</th></tr>
<tr><th>Channel</th><th>VERT MODE</th><th>0.1V - 1V</th><th>Circuit No.</th><th>Name</th></tr>
<tr><td rowspan="2">CH3</td><td rowspan="4">ALT and QUAD IN (push)</td><td>0.1V</td><td>0.6V</td><td rowspan="4">6 div ±4%</td><td>4R17</td><td>CH3 GAIN</td></tr>
<tr><td>1 V</td><td>6 V</td><td>–</td><td>–</td></tr>
<tr><td rowspan="2">CH4</td><td>0.1V</td><td>0.6V</td><td>4R47</td><td>CH4 GAIN</td></tr>
<tr><td>1 V</td><td>6 V</td><td>–</td><td>–</td></tr>
</table>
</td></tr>
<tr><td>Check and adjustment</td><td>Check that the amplitude of CRT waveform is within 6 div ± 4%.
If the check result shows that CH3 has a great error, adjust 4R17 CH3 GAIN; if CH4 has a great error, adjust 4R47 CH4 GAIN (see figure 6-9-2).</td></tr>
</table>

6-9-7 Attenuator Compensation II (CH3·CH4)

Item	Description
Rating	± 3% or less

Connection

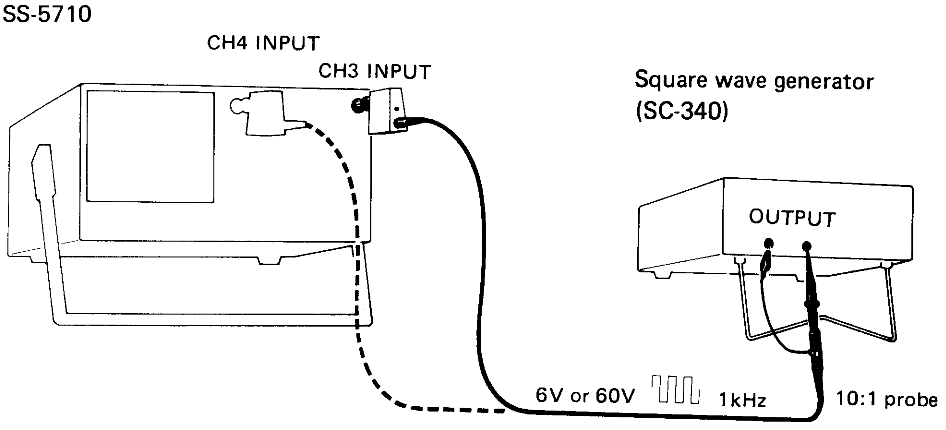

Setting

Sequence	SS-5710			Input signal			Amplitude on CRT screen	Calibrator	Remarks
	Channel	VOLTS/ DIV	VERT MODE	Voltage	Waveform	Frequency		Circuit No.	
1	CH3	0.1V	ALT and QUAD IN (push)	6V	Square wave	1kHz	6 div	–	Adjust "x10 probe"
2		1V		60V				4C02	Probe
								4C03	Through
3	CH4	0.1V		6V				–	Adjust "x10 probe"
4		1V		60V				4C16	Probe
								4C17	Through

Check and adjustment

1. Check the flatness of CH3.
   If the flatness is improper, adjust the phase of "x10 probe" with the variable capacitor.
2. Check the attenuator phase. If improper, make adjustment with 4C03 and 4C02 (figure 6-9-2).
3. Check and adjust CH4 using the step 1.
4. Check in the same way as step 2; if improper, make adjustment with 4C17 and 4C16 (see figure 6-9-2).

Item	Description
Related items	See item 6-9-5.
CRT waveform	See 6-9-5. (Page 6-21)

6-9-8 Square Wave Response I (Sag)

<table>
<tr><th>Item</th><th colspan="2">Description</th></tr>
<tr><td>Rating</td><td colspan="2">CH1 • CH2 (5mV/DIV): 1.5%
CH3 • CH4 (0.1V/DIV): 2%</td></tr>
<tr><td>Connection</td><td colspan="2">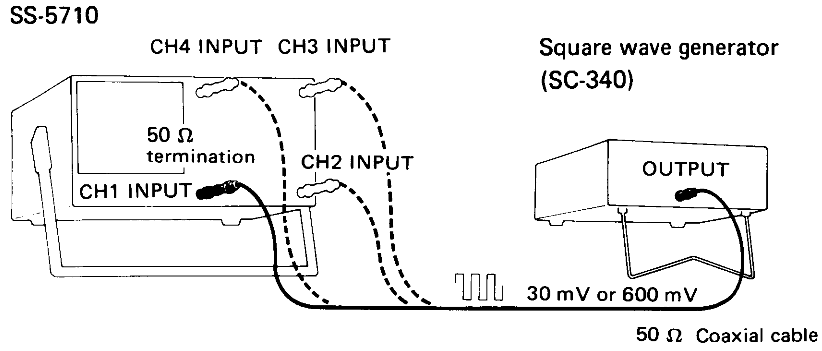
</td></tr>
<tr><td>Setting</td><td colspan="2">
<table>
<tr><th rowspan="2">Sequence</th><th>SS-5710</th><th colspan="3">Input signal</th><th rowspan="2">Amplitude on CRT screen</th></tr>
<tr><th>Channel</th><th>Voltage</th><th>Waveform</th><th>Frequency</th></tr>
<tr><td>1</td><td>CH1 • CH2</td><td>30mV</td><td rowspan="2">Square wave</td><td rowspan="2">60Hz, 1kHz, and 250kHz</td><td rowspan="2">6 div</td></tr>
<tr><td>2</td><td>CH3 • CH4</td><td>600mV</td></tr>
</table>
</td></tr>
<tr><td>Check</td><td colspan="2">1. Set the waveform at the center of the screen and check sags of CH1 and CH2.
2. Check the CH3 and CH4 in the same way.</td></tr>
<tr><td>Related items</td><td colspan="2">6-9-9 to 6-9-11</td></tr>
<tr><td>CRT waveform</td><td>60Hz
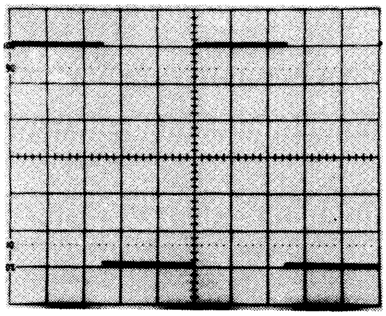</td><td>1kHz
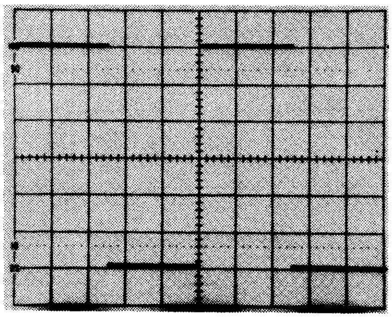</td></tr>
</table>

6-9-8 Square Wave Response I (Cont.)

Item	Description	
CRT waveform	250kHz 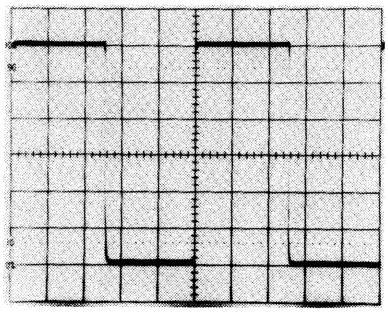	
Reference	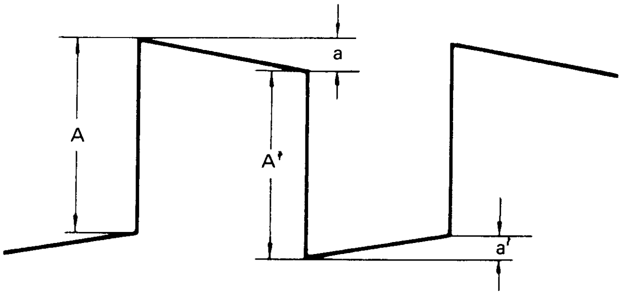	A: Basic amplitude: sag = a/A (or a'/A') x 100% a : Sag: Take the greater value of a/A and a'/A' (by MEA-27, Japanese Electric Machinery Industry Association)

6-9-9 Square Wave Response II (Overshoot and Others)

<table>
<tr><th>Item</th><th>Description</th></tr>
<tr><td>Rating</td><td>CH1•CH2 (5mV/DIV): 5%
CH3•CH4 (0.1V/DIV): 10%</td></tr>
<tr><td>Connection</td><td>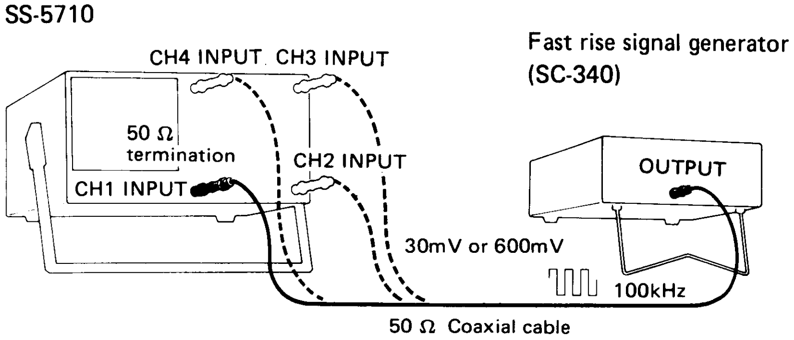
</td></tr>
<tr><td>Setting</td><td><table>
<tr><th rowspan="2">Sequence</th><th>SS-5710</th><th colspan="2">Input signal</th><th rowspan="2">Amplitude on CRT screen</th><th>Calibrator</th></tr>
<tr><th>Channel</th><th>Voltage</th><th>Frequency</th><th>Circuit No.</th></tr>
<tr><td>1</td><td>CH1•CH2</td><td>30mV</td><td rowspan="2">100kHz</td><td rowspan="2">6 div</td><td rowspan="2">5R54, 5R82, 5C14
5C21, 3C10</td></tr>
<tr><td>2</td><td>CH3•CH4</td><td>600mV</td></tr>
</table></td></tr>
<tr><td>Check and adjustment</td><td>1. Adjust the output voltage so that the CRT amplitude swings 6 div and check overshoot and other distorsion.
If the check result does not satisfy the rating, adjust CH1 overshoot and other distortions with 5R54, 5R82, 5C14, and 5C21 (see figure 6-9-2).
After adjusting CH1, check CH2. If the rating is not satisfied, adjust it with 3C10 (figure 6-9-2).
2. Check CH3 and CH4.

PRECAUTION
The use of these calibrators is shared by CH1, CH2, CH3, and CH4 (3C10 is for CH2, CH3 and CH4). After adjustment, check the bandwidth described in the following item.</td></tr>
<tr><td>Related items</td><td>6-9-10, 6-9-11</td></tr>
</table>

6-9-9 Square Wave Response II (Cont.)

Item	Description
CRT waveform	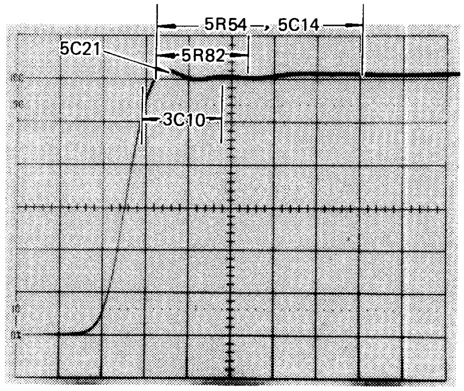
Reference	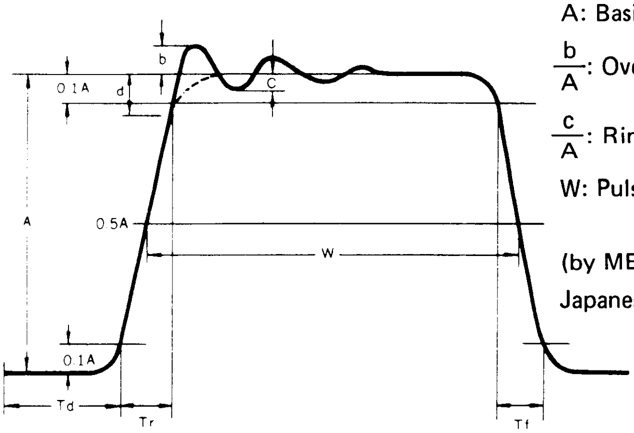 A: Basic amplitude Tr: Rise time $\frac{b}{A}$: Overshoot Tf: Fall time $\frac{c}{A}$: Ringing $\frac{d}{A}$: Roundness W: Pulse width Td: Signal delay time (by MEA-27, Japanese Electric Machinery Industry Association)

6-9-10 Bandwidth

<table>
<tr><th>Item</th><th>Description</th></tr>
<tr><td>Rating</td><td>CH1 • CH2 5mV/div to 0.2V/div DC to 60MHz -3dB
1mV/div to 2mV/div DC to 20MHz -3dB
CH3 • CH2 0.1V/div to 1V/div DC to 50MHz -3dB</td></tr>
<tr><td>Connection</td><td>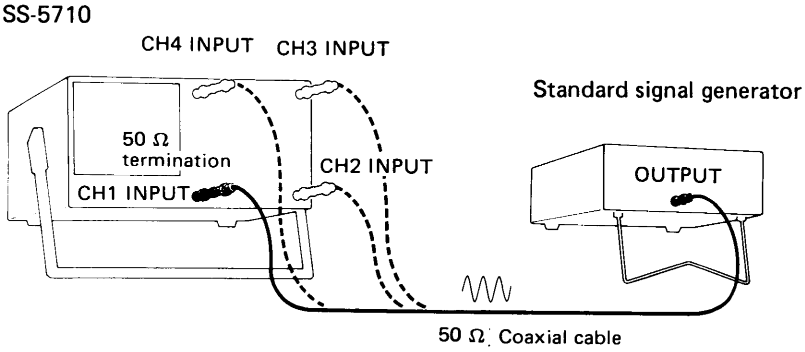
</td></tr>
<tr><td>Setting</td><td>
<table>
<tr><th rowspan="2">Sequence</th><th colspan="2">SS-5710</th><th colspan="3">Input signal</th><th rowspan="2">Amplitude on CRT screen</th></tr>
<tr><th>Channel</th><th>VOLTS/DIV</th><th>Voltage</th><th>Waveform</th><th>Frequency</th></tr>
<tr><td>1</td><td rowspan="4">CH1 • CH2</td><td rowspan="2">5mV</td><td rowspan="2">30mV</td><td rowspan="6">sine</td><td>50kHz</td><td>6 div</td></tr>
<tr><td>2</td><td>60MHz</td><td>4.25 div or more</td></tr>
<tr><td>1</td><td rowspan="2">1mV</td><td rowspan="2">6mV</td><td>50kHz</td><td>6 div</td></tr>
<tr><td>2</td><td>20MHz</td><td>4.25 div or more</td></tr>
<tr><td>1</td><td rowspan="2">CH3 • CH4</td><td rowspan="2">0.1V</td><td rowspan="2">0.6V</td><td>50kHz</td><td>6 div</td></tr>
<tr><td>2</td><td>50MHz</td><td>4.25 div or more</td></tr>
</table>
</td></tr>
<tr><td>Check</td><td>1. Set the reference frequency to 50kHz and adjust the signal generator so that the amplitude swings 6 div.
2. Then, change the frequency corresponding to each rating,and read the amplitude.
If the bandwidth is outside the rated values, readjust the items of "Square Wave Response" described previously. In this case, rise the tip of waveform sharply in order to have a good bandwidth.</td></tr>
</table>

6-9-11 Linearity

<table>
<tr><th>Item</th><th>Description</th></tr>
<tr><td>Rating</td><td>Within ± 3% (at 1kHz)</td></tr>
<tr><td>Connection</td><td>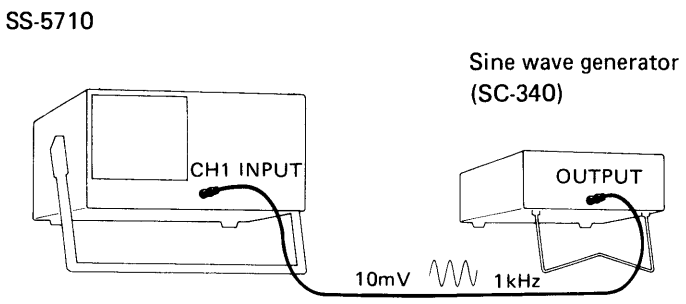
</td></tr>
<tr><td>Setting</td><td><table>
<tr><th>SS-5710</th><th colspan="3">Input signal</th><th rowspan="2">Amplitude on CRT screen</th></tr>
<tr><th>Channel</th><th>Voltage</th><th>Waveform</th><th>Frequency</th></tr>
<tr><td>CH! • CH2</td><td>10mV</td><td>sine</td><td>1kHz</td><td>2 div</td></tr>
</table></td></tr>
<tr><td>Check</td><td>Swing amplitude by 2 div at the screen center. Then, using POSITION control, move the waveform within 2 div at the top and bottom of the scale, and check that the amplitude change is within ± 3%.</td></tr>
<tr><td>CRT
waveform</td><td>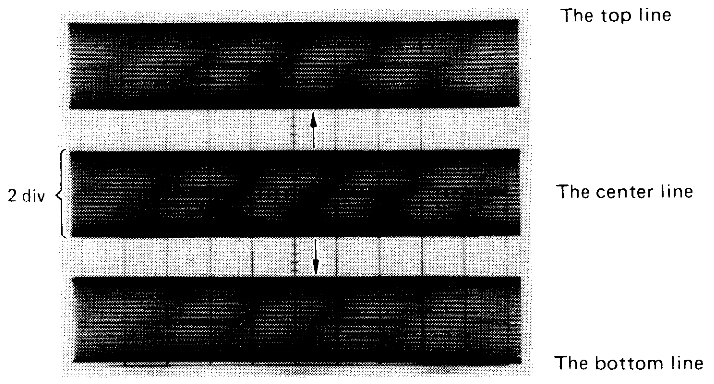
</td></tr>
</table>

Figure 6-9-1. Location of calibrators (Vertical deflection system)

Top

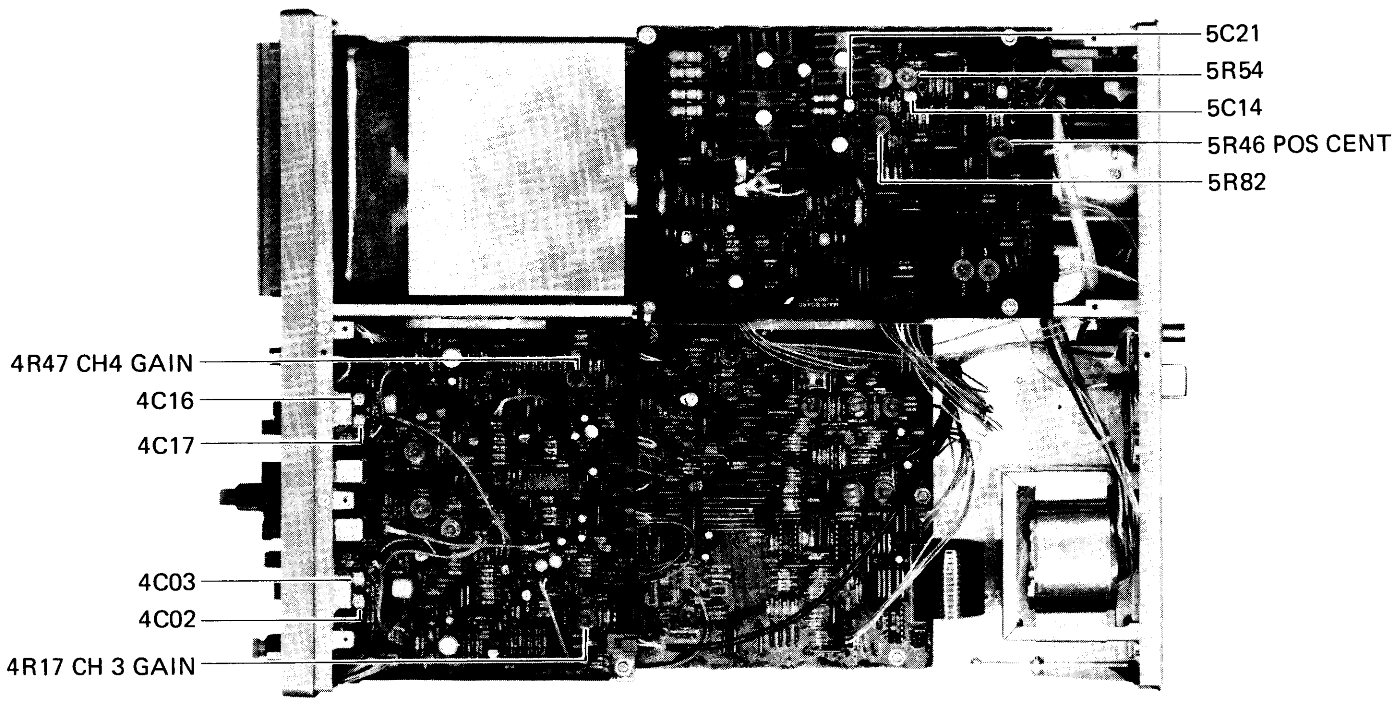

Bottom

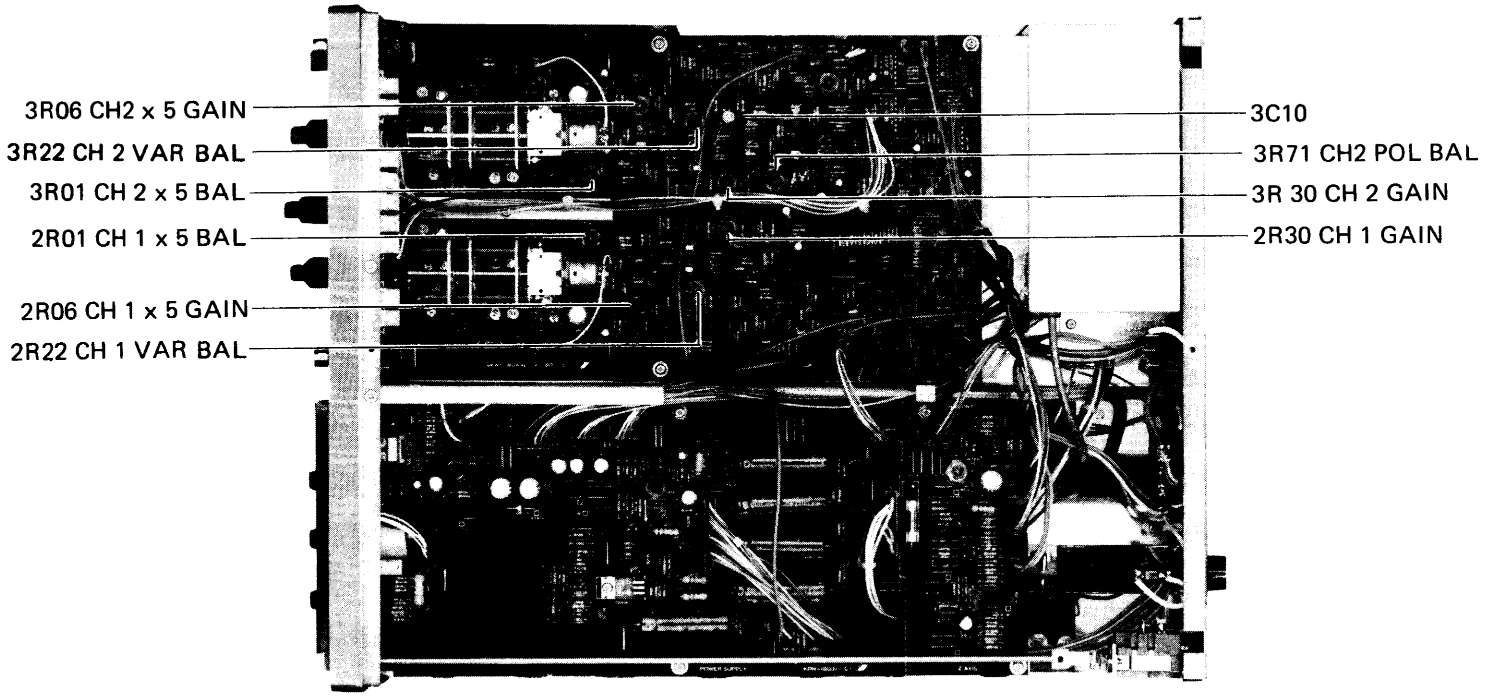

6-10 TIRGGER SYSTEM CHECK AND ADJUSTMENT

6-10-1 A Triggering

Item — **Description**

Connection

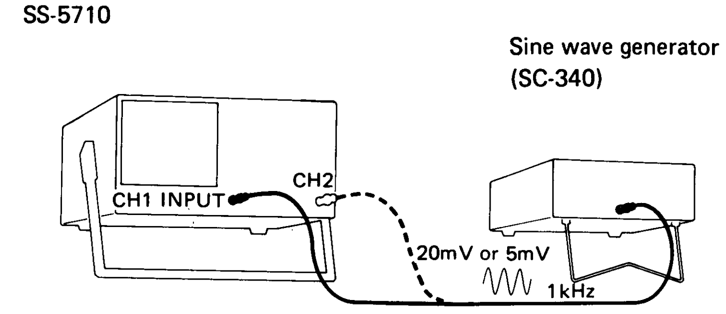

Setting

1

Sequence	Item	SS-5710			Input signal			Amplitude on CRT screen	Calibrator	
		VERT MODE	A SOURCE	A COUPLING	Voltage	Waveform	Frequency		Circuit No.	Name
1	CH1 trigger	CH1	CH1	AC	20mV	Sine	1kHz	4 div	7R26	A TRIG 0 ADJ
2				DC					2R54	CH1 TRIG ADJ
3				FIX	5mV			1 div	7R28	FIX
4	CH2 trigger	CH2	CH2	AC	20mV			4 div	3R54	CH2 TRIG ADJ
5			NORM	DC					5R26	NORM TRIG ADJ

Check and adjustment

1. Set the LEVEL of A Sweep at the center and check that the sweep start point is located near the horizontal center line of the scale.
   If the check result shows a great separation, adjust it with 7R26 A TRIG 0 ADJ (see figure 6-10-1). Also check at SLOPE push-pull that "+" and "–" are switched symmetrically.
2. Switch A sweep COUPLING to DC and check that the trigger occurs at the same level for AC of step 1. If the check result shows a great separation, adjust it with 2R54 CH1 TRIG ADJ (see figure 6-10-1).
3. Switch A sweep COUPLING to FIX and check that the trigger occurs when the screen amplitude is set to 1 div. If not triggered, adjust it with 7R28 FIX. At this time, check that the trigger point is not changed by turning LEVEL of A sweep.

6-10-1 A Triggering (Cont.)

Item	Description
Check and adjustment	4. Check CH2 using the step 1. If the check result shows a great separation, adjust it with 3R54 CH2 TRIG ADJ (see figure 6-10-1). 5. Set A sweep SOURCE to NORM and switch A sweep COUPLING to AC, then check that the trigger occurs at the same AC level of step 4. If the check result shows a great separation, adjust it with 5R26 NORM TRIG ADJ (see figure 6-10-1).

6-10-2 B triggering

Item	Description
Connection	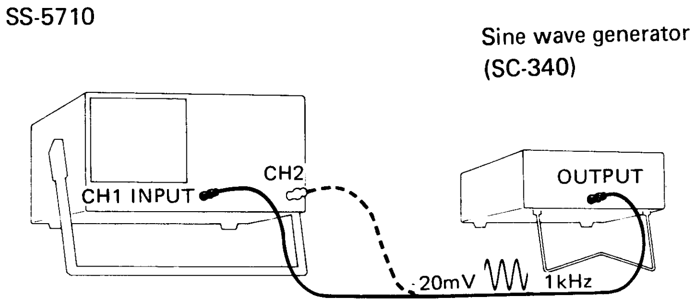
Setting	Input sine wave of 20mV and 1kHz to the input of CH1 and swing amplitude by 6 div.
Check	Set B sweep LEVEL at the center and check that the sweep start point is located near the horizontal center line of scale. Also at SLOPE push-pull, check "+" and "−" are switched symmetrically. If the check result shows a great separation, adjust it with 7R53 B TRIG 0 ADJ (see figure 6-10-1).

Figure 6-10-1. Location of calibrators (Trigger system)

Top

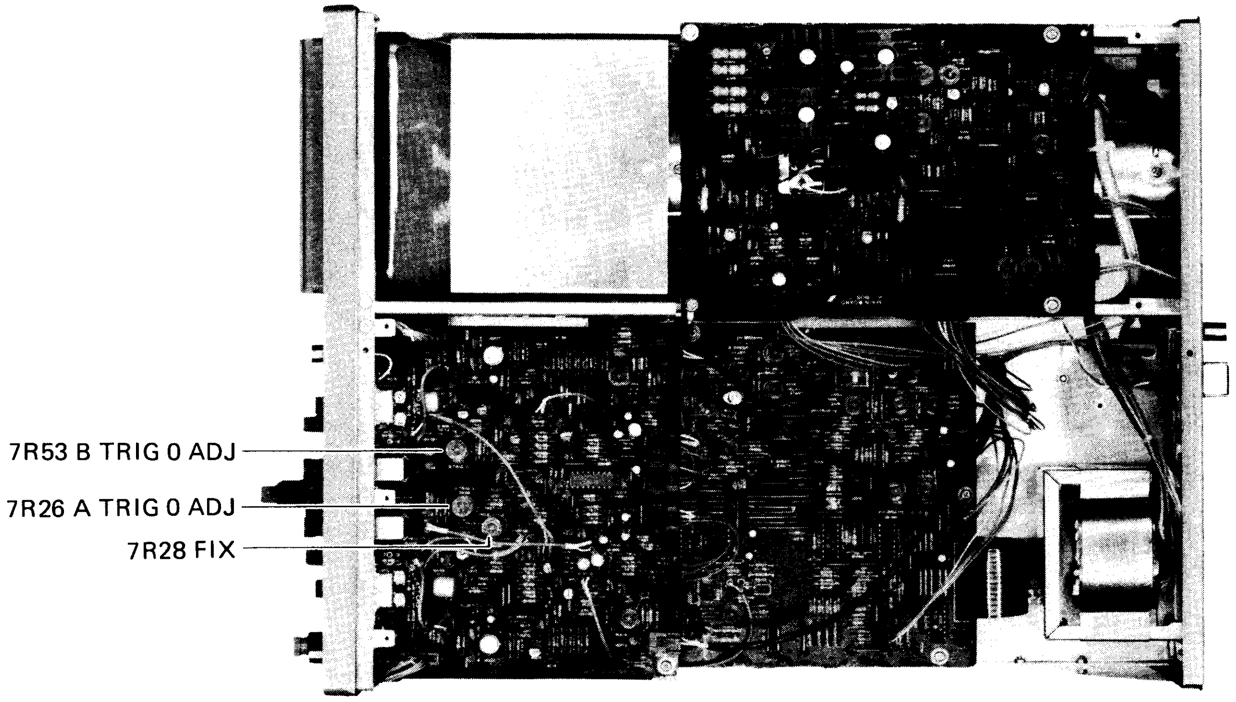

Bottom

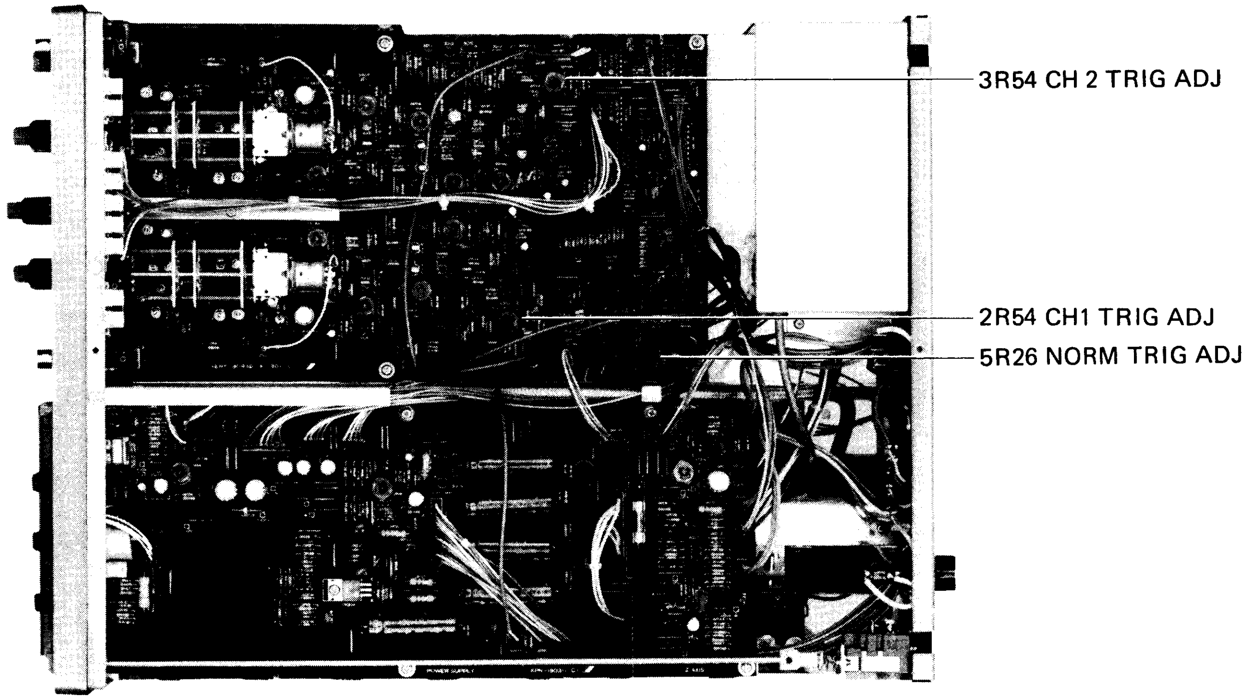

6-11 HORIZONTAL DEFLECTION SYSTEM CHECK AND ADJUSTMENT

6-11-1 Sweep Rate

Item	Description
Rating	A sweep I. At screen center 8 div: 50 nS/div to 5 mS/div ± 3% 10 mS/div to 0.5 S/div ± 4% II. At any 2 div within 8 div from the screen center: ± 5% B sweep I. At screen center 8 div: ± 3% II. At any 2 div within 8 div from the screen center: ± 5%
Connection	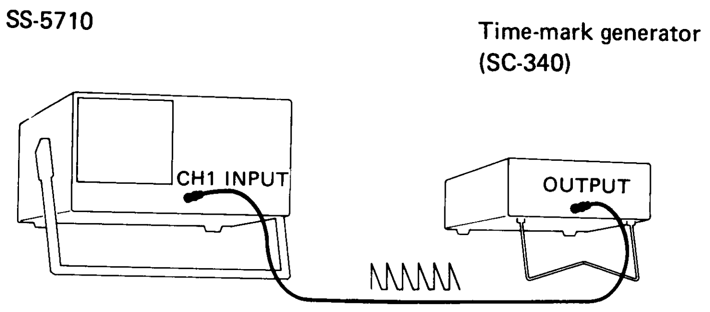
Setting	See table below

Setting:

Sequence	Item	SS-5710		Input signal	Calibrator	
		HORIZ DISPLAY	TIME/DIV	Repetition	Circuit No.	Name
1	A sweep	A	1 mS	1 mS	11R25	NORM GAIN
2			10 µS to 0.5 S	Set TIME/DIV		
3			50 nS to 5 µS		8C51	–
4	B sweep	B (DLY'D)	1 mS	1 mS	10R19	B SWEEP CAL
5			10 nS to 50 mS	Set TIME/DIV		
6			50 nS to 5 µS		9C51	–

6-11-1 Sweep Rate (Cont.)

Item	Description
Check and adjustment	1. Set the start pulse on the line 1 div to the right of the scale left end, then check errors of I and II. 2. Switch REPETITION to A TIME/DIV and check the error of I and II between 10 μS to 0.5 S. If the sweep time error is great in the same direction, adjust with 11R25 NORM GAIN (see figure 6-11-1). 3. Switch REPETITION to TIME/DIV and check the error of I and II between 50nS to 5 μS. If the error is great, adjust with 8C51 (see figure 6-11-1). 4. Set HORIZ DISPLAY to B (DLY'D) and check in the same way as step 1. Switch REPETITION to B TIME/DIV and check errors of I and II between 10 μS to 50 mS. 5. If the sweep time error is great in the same direction, adjust with 10R19 B SWEEP CAL (see figure 6-11-1). Switch REPETITION to B TIME/DIV and check errors of I and II between 50 nS to 5μS. 6. If the error is great between 50 nS/div and 5 μS/div, adjust with 9C51 (see figure 6-11-1).
Related items	6-11-2 to 6-11-7, 6-12-1, 6-12-2
CRT waveforms	Sweep time error I 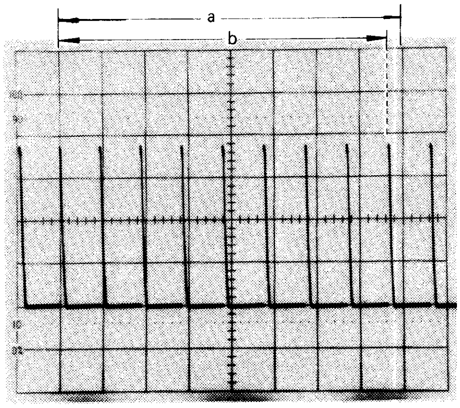 Sweep time error ratio = $\frac{a-b}{a}$ x 100 (%) Sweep time error ratio = where a: effective horizontal surface total scale length (8 div) b: measured value of time marker corresponding to "a". Sweep time error II 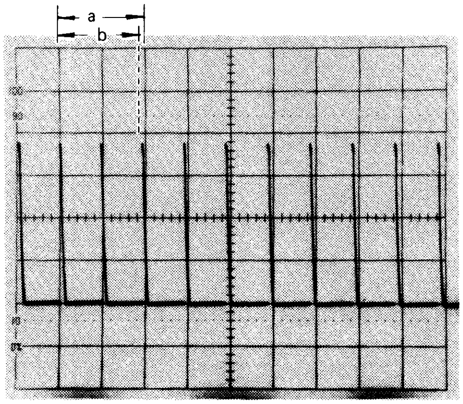 Sweep time error ratio = $\frac{a-b}{a}$ x 100 (%) Sweep time error ratio = where a: any 2 div in effective horizontal surface b: measured value of time marker corresponding to "a".

6-11-2 Magnification Center

Item	Description
Connection	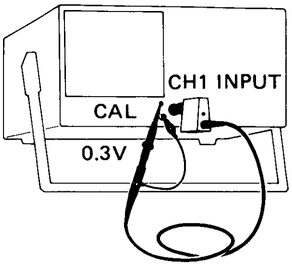
Setting	Swing CRT amplitude by 6 div.
Check and adjustment	With the horizontal POSITION, set the sweep start point (rise of CAL waveform) to the vartical center line of scale, pull FINE (PULL x 10 MAG), and check the motion of the sweep start point. If the motion width is great, adjust it with 11R21 MAG CENTER (see figure 6-11-1).
Related items	6-11-5, 6-12-1.
CRT waveform	x 1 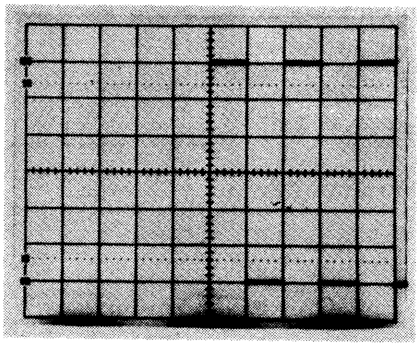 x 10 MAG 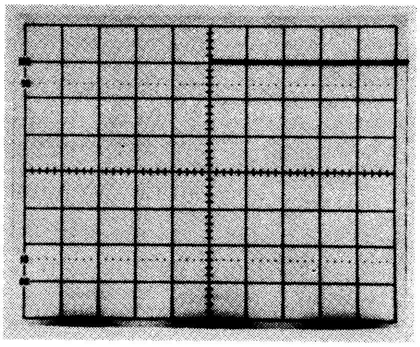

6-11-3 Magnified Sweep Rate

Item — **Description**

Rating

I. At the screen center 8 div: 50 nS/div to 0.1 μS/div ± 5%
0.2 μS/div to 0.5 S/div ± 4%
II. At any 2 div within 8 div from the screen center: 50 nS/div to 0.1 μS/div ±10%
0.2 μS/div to 0.5 S/div ± 6%
Remove, however, 25 nS before and after the sweep in I • II.

Connection

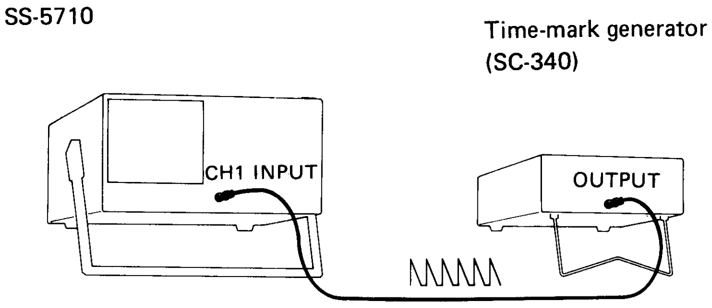

Setting

Sequence	Item	SS-5710		Input signal	Calibrator	
		HORIZ DISPLAY	TIME/DIV	Repetition	Circuit No.	Name
1	A sweep	A	1 mS	1 mS	11R24	MAG GAIN
			20 μS to 0.5 S	Set to TIME/DIV		
2			50 nS		11C07, 11C10	–
3	B sweep	B (DLY'D)	50 nS to 50 mS		–	–

Check and adjustment

1. Pull FINE (PULL x 10 MAG) to take trigger and check errors from the rated values for I and II.
   If the check result shows that the errors in each range are great in the same direction, adjust it with 11R24 MAG GAIN (see figure 6-11-1).
2. If the error is great in 50 S range, adjust it with 11C07 and 11C10 (see figure 6-11-1).
3. Check B sweep in the same way.

Related items

6-12-1

CRT waveform

See 6-11-1 (Page 6-33).

6-11-4 Sweep Trace Length

Item	Description
Rating	11.5 to 14 div
Connection	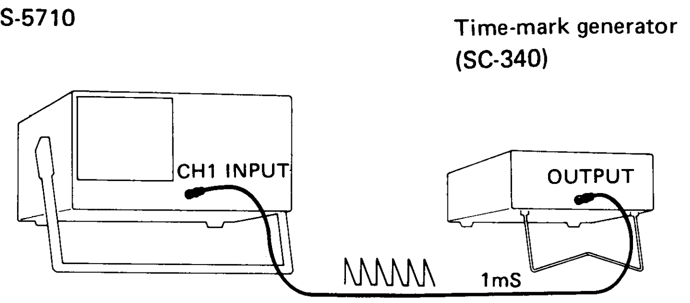
Setting	see table below
Check and adjustment	Check that a trace contains 11.5 to 14 pulses. If the error is great in A sweep, adjust 8R04 A SWEEP LENGTH (see figure 6-11-1). If the error is great in B sweep, adjust 9R03 B SWEEP LENGTH (see figure 6-11-1).

Item	SS-5710		Input signal	
	HORIZ DISPLAY	A TIME/DIV	Repetition rate	Wave form
A sweep	A	1 mS	1 mS	Pulse
B sweep	B (DLY'D)	1 mS		

6-11-5 B Sweep Start

Item	Description
Setting	HORIZ DISPLAY ALT B TIME/DIV 0.5 mS B sweep source RUNS AFTER DELAY
Check and adjustment	Turn TRACE SEPARATION and move B sweep trace to a little above A INTEN sweep trace. Check at this time, both start points of A INTEN sweep trace and B sweep trace are at the same position on the vertical line of the scale. If the check result shows a separation, adjust it with 9R15 B SWEEP START (see figure 6-11-1).

6-11-6 Start and Stop of Delay

<table>
<tr><th>Item</th><th>Description</th></tr>
<tr><td>Rating</td><td>At 0.5 μS/div to 5 S/div</td></tr>
<tr><td>Connection</td><td>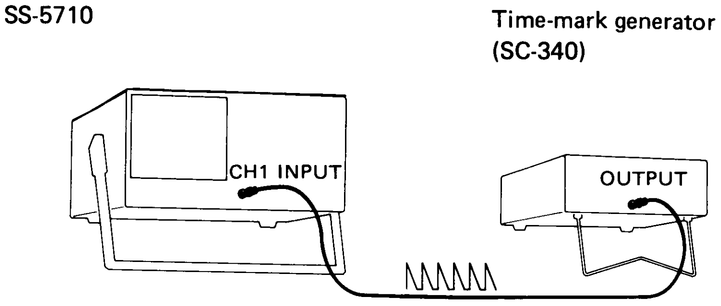 </td></tr>
<tr><td>Setting and calibrator</td><td>
<table>
<tr><th rowspan="2">Sequence</th><th colspan="3">SS-5710</th><th colspan="2">Input signal</th><th colspan="2">Calibrator</th></tr>
<tr><th>HORIZ DISPLAY</th><th>B TIME /DIV</th><th>B sweep source</th><th>Waveform</th><th>Repetition rate</th><th>Circuit No.</th><th>Name</th></tr>
<tr><td>1</td><td rowspan="2">A INTEN</td><td rowspan="2">5 S</td><td rowspan="2">RUNS AFTER DELAY</td><td rowspan="2">PULSE</td><td>0.2 mS</td><td>9R26</td><td>DELAY START</td></tr>
<tr><td>2</td><td>1 mS</td><td>9R23</td><td>DELAY STOP</td></tr>
</table>
</td></tr>
<tr><td>Check and adjustment</td><td>
1. Turn DELAY TIME MULT dial counterclockwise and set the dial scale to 0.40, then check that B sweep is located at the third pulse from the sweep start.
2. Set repetition rate to 1 mS, turn the dial clockwise and set the dial scale to 10.00, then check that B sweep is located at the 11th pulse.
If the check result shows a great error, adjust step 1 with 9R26 DELAY START (see figure 6-11-1); step 2 with 9R23 DELAY STOP (see figure 6-11-1).
PRECAUTION
Steps 1 and 2 affect one another, so make adjustment repeatedly.
</td></tr>
</table>

6-11-6 Start and Stop of Delay (Cont.)

Item	Description
CRT waveform	DELAY TIME MULT start point 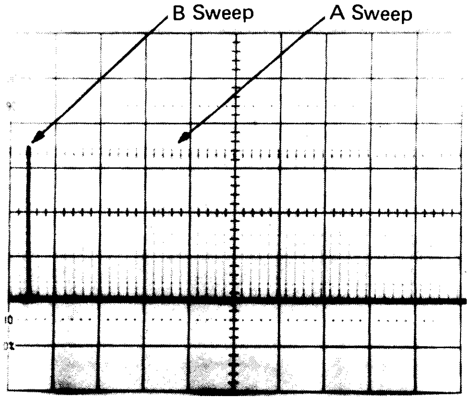 A TIME/DIV 1 mS, B TIME/DIV 5 μS Input signal: 0.2 mS pulse wave DELAY TIME MULT dial: scale 0.40 DELAY TIME MULT stop point 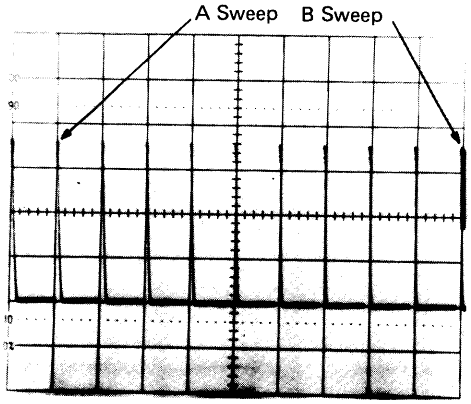 A TIME/DIV 1 mS, B TIME/DIV 5 μ Input signal: 1 mS pulse wave DELAY TIME MULT dial: scale 10.00

6-11-7 Jitter

<table>
<tr><th>Item</th><th>Description</th></tr>
<tr><td>Rating</td><td>1/20,000 or less</td></tr>
<tr><td>Connection</td><td>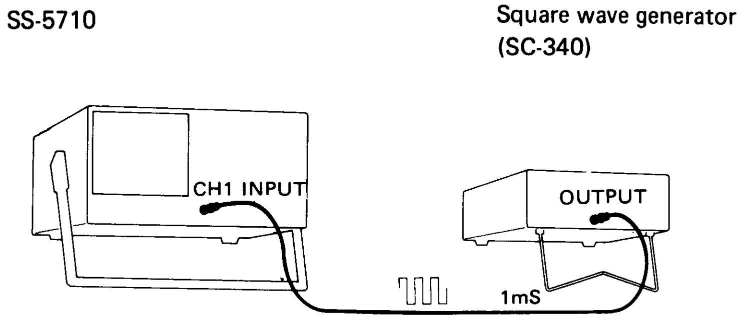 </td></tr>
<tr><td>Setting</td><td>
<table>
<tr><th colspan="3">SS-5710</th><th colspan="2">Input signal</th><th rowspan="2">CRT amplitude</th></tr>
<tr><th>HORIZ DISPLAY</th><th>B TIME/ DIV</th><th>B sweep source</th><th>Waveform</th><th>Repetition rate</th></tr>
<tr><td>B (DLY'D)</td><td>0.5 μS</td><td>RUNS AFTER DELAY</td><td>Square wave</td><td>1 mS</td><td>2 div</td></tr>
</table>
</td></tr>
<tr><td>Check</td><td>Turn DELAY TIME MULT dial slowly near 1.00 and 10.00 so that the pulse rise is drawn on the screen center, and check that jitter is within 1 div.</td></tr>
<tr><td>CRT waveform</td><td>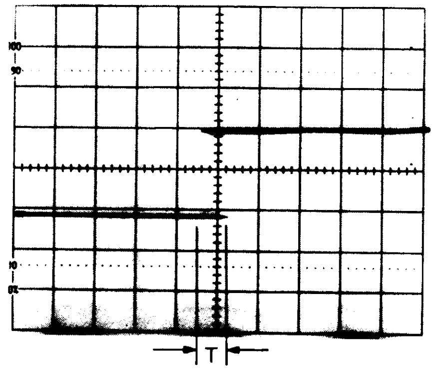
T = 1 div or less
A TIME/DIV 1mS
B TIME/DIV 0.5 μS
DELAY TIME MULT dial scale near 10.00</td></tr>
</table>

Figure 6-11-1. Location of calibrators (Horizontal deflection system)

Top

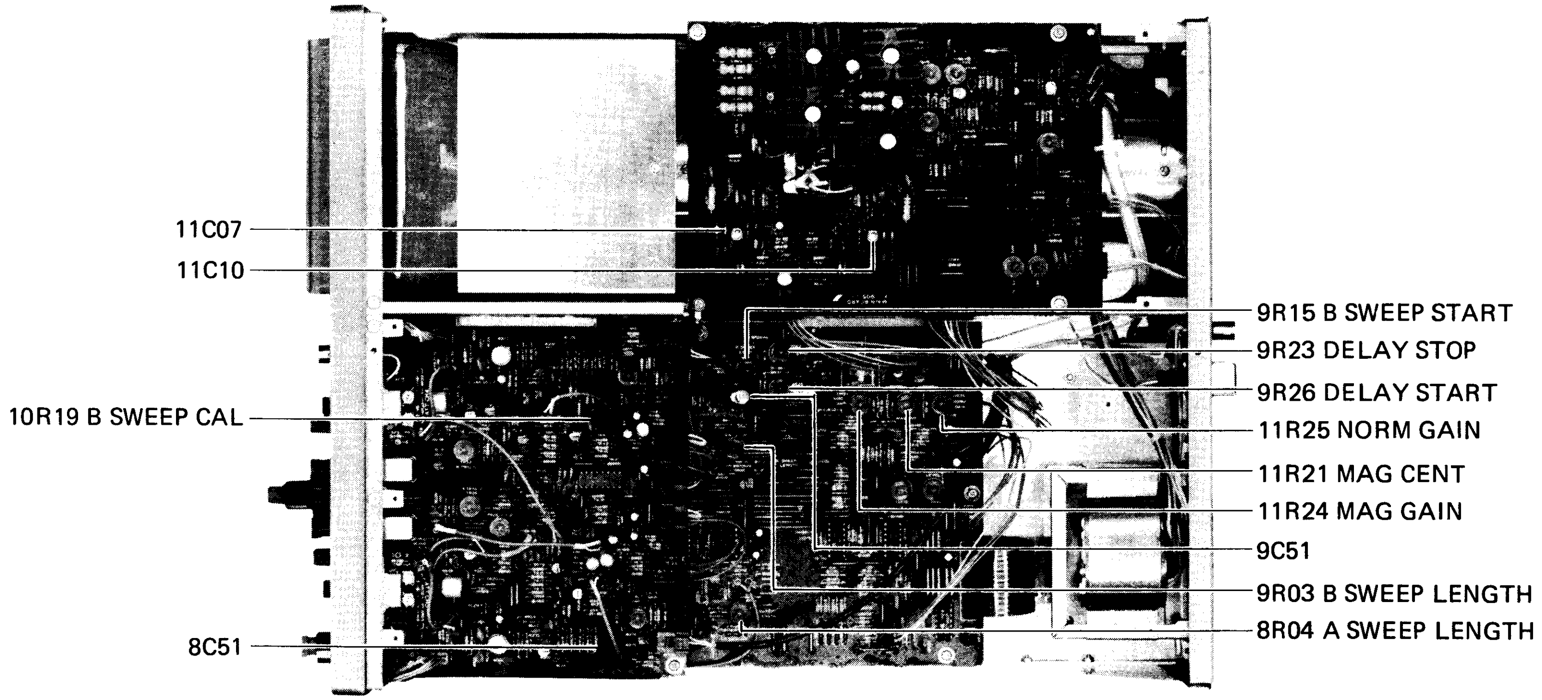

6-12 X-Y OPERATION

6-12-1 Deflection Factor and Intensity Level

<table>
<tr><th>Item</th><th>Description</th></tr>
<tr><td>Rating</td><td>X-axis (same as CH2 VOLTS/DIV): ± 2%
Y-axis (same as CH1 VOLTS/DIV): ± 5%</td></tr>
<tr><td>Connection</td><td>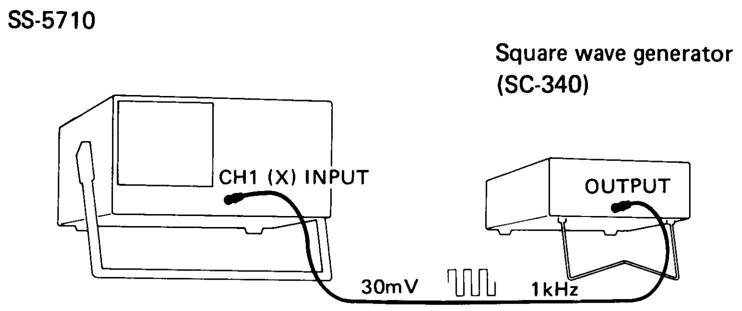
</td></tr>
<tr><td>Setting</td><td>
<table>
<tr><th rowspan="2">Sequence</th><th colspan="3">SS-5710</th><th colspan="3">Input signal</th><th rowspan="2">Amplitude on CRT screen</th><th colspan="2">Calibrator</th></tr>
<tr><th>Channel</th><th>HORIZ DISPLAY</th><th>AC-DC GND</th><th>Voltage</th><th>Waveform</th><th>Fre-quency</th><th>Circuit No.</th><th>Name</th></tr>
<tr><td>1</td><td rowspan="3">CH1</td><td>A</td><td rowspan="2">DC</td><td rowspan="3">30 mV</td><td rowspan="3">Square wave</td><td rowspan="3">1 kHz</td><td>6 div</td><td>–</td><td>–</td></tr>
<tr><td>2</td><td rowspan="2">X-Y</td><td>6 div ± 5%</td><td>11R05</td><td>X-Y GAIN</td></tr>
<tr><td>3</td><td>GND</td><td>Spot</td><td>11R06</td><td>X-Y LEVEL</td></tr>
</table>
</td></tr>
<tr><td>Check and adjustment</td><td>1. Swing the CRT amplitude by 6 div and set the sweep start point to the left side of scale.
2. Switch HORIZ DISPLAY to X-Y and check that horizontal amplitude is 6 div ± 5%.
If the check result shows a great error, adjust it with 11R05 X-Y GAIN (see figure 6-12-1).
3. Set CH1 to GND and check that the spot (if spot does not appear, turn INTEN clockwise) is located near the vertical center line.
If the check result shows that the spot is far from the vertical center line, adjust it with 11R06 X-Y LEVEL (see figure 6-12-1).

PRECAUTION
The steps 2 and 3 affect one other, so make adjustment repeatedly.</td></tr>
</table>

6-12-2 Phase Difference

<table>
<tr><th>Item</th><th>Description</th></tr>
<tr><td>Rating</td><td>Within 3° (from DC to 50kHz sine wave)</td></tr>
<tr><td>Connection</td><td>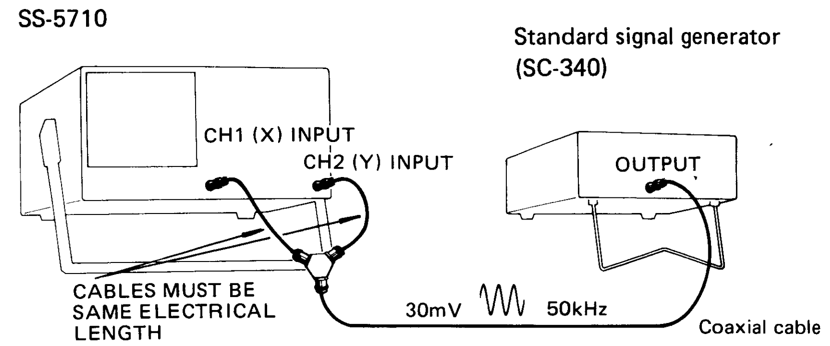
</td></tr>
<tr><td>Setting</td><td>
<table>
<tr><th colspan="2">SS-5710</th><th colspan="3">Input signal</th><th rowspan="2">Amplitude on CRT screen (vertical and horizontal)</th><th rowspan="2">Remarks</th></tr>
<tr><th>Channel</th><th>HORIZ DISPLAY</th><th>Voltage</th><th>Waveform</th><th>Frequency</th></tr>
<tr><td>X (CH1) and Y (CH2)</td><td>X-Y</td><td>30 mV</td><td>sine</td><td>50kHz</td><td>6 div</td><td>Divider B-50D3 used</td></tr>
</table>
</td></tr>
<tr><td>Check</td><td>Read "a" on the screen and check the reading is less than 0.3 div.</td></tr>
<tr><td>CRT waveform</td><td>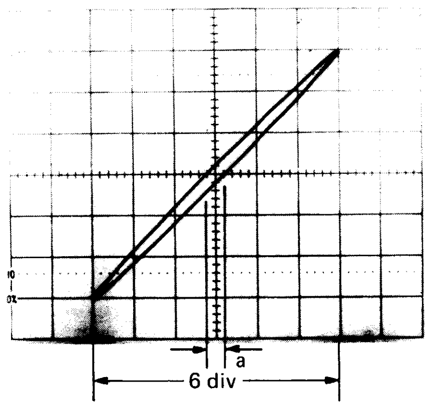

a : Opening at horizontal center line</td></tr>
</table>

Figure 6-12-1. Location of calibrators (X-Y operation)

Top

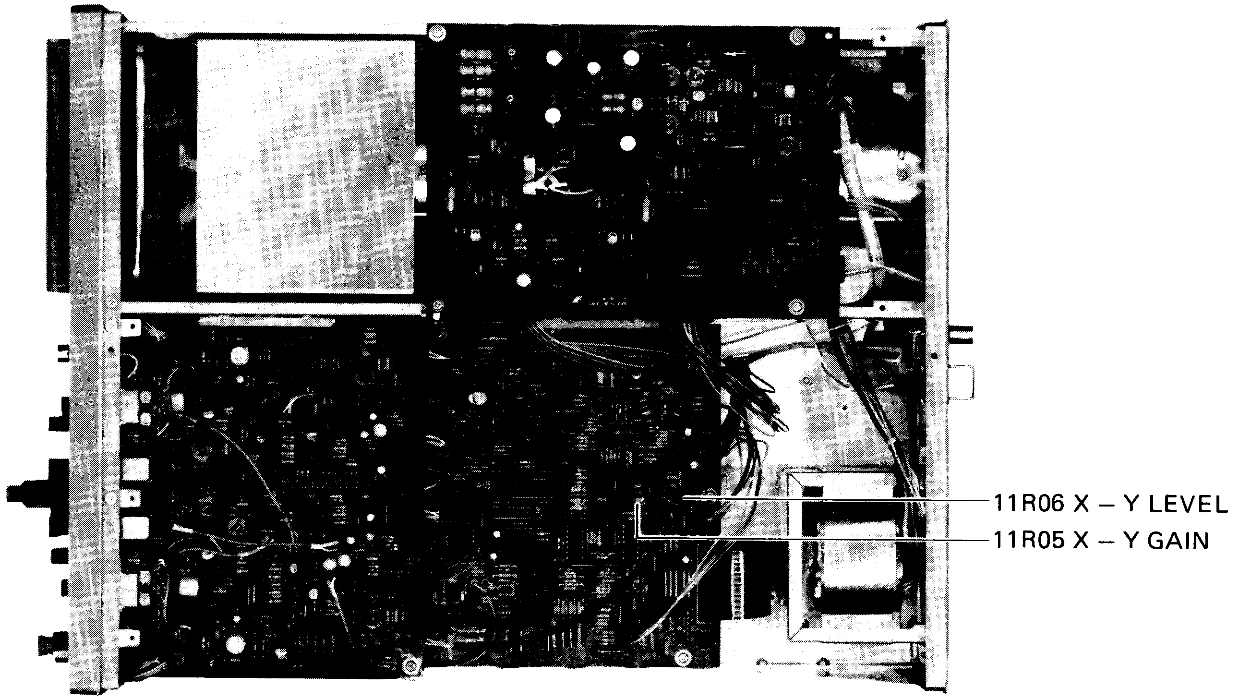

6-13 COUNTER

6-13-1 Power Supply DC Level

<table>
<tr><th>Item</th><th>Description</th></tr>
<tr><td>Rating</td><td><table><tr><th>DC power voltage</th><th>Output voltage range</th></tr><tr><td>+12 V
+5 V
–5 V</td><td>Within ± 5%</td></tr></table></td></tr>
<tr><td>Check and adjustment</td><td>Measure the voltage between the test points (see Fig. 6-13-1) and GND with a digital multimeter and check that the voltage is within ±5% of the rating.</td></tr>
</table>

6-13-2 Self CHECK

<table>
<tr><th>Item</th><th>Description</th></tr>
<tr><td>Rating</td><td><table><tr><th>Range</th><th>Computed values</th><th>Units</th></tr><tr><td>0.01</td><td>10000.0 ± 1 count</td><td>kHz</td></tr><tr><td>0.1</td><td>10000.00 ± 1 count</td><td></td></tr><tr><td>1</td><td>10000.000 ± 1 count</td><td></td></tr><tr><td>10</td><td>Δ0.000.000 or 9999.9999</td><td></td></tr></table>
<Reference> At Δ0.000.0000 scale exceeded.</td></tr>
<tr><td>Setting</td><td>Set the function switch to CHECK.</td></tr>
<tr><td>Check and adjustment</td><td>Check that the selected range values are with the respective ratings.</td></tr>
</table>

6-13-3 FREQ Measurement Mode

Item **Description**

Connection

(1)

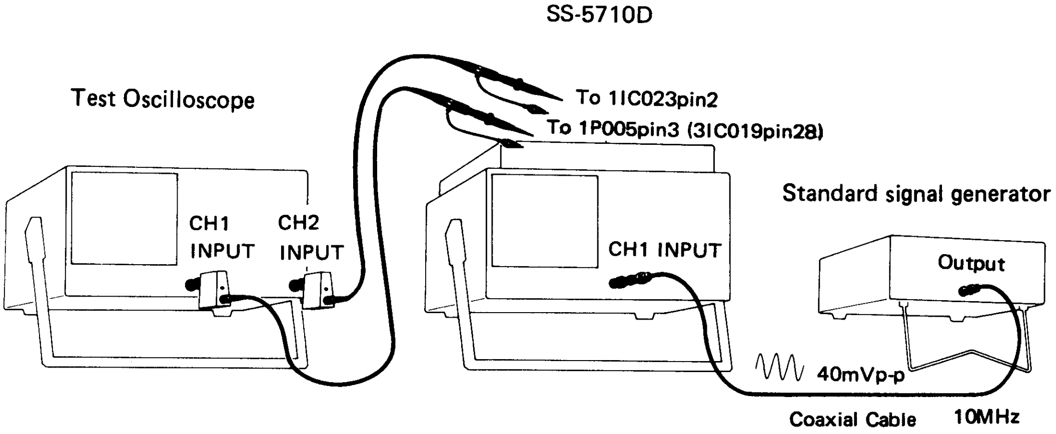

(2)

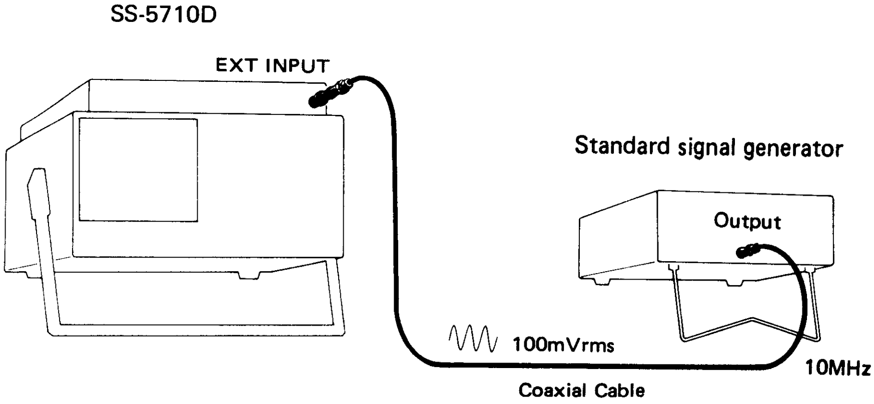

Setting

Se-quence	Connec-tion	Test socilloscope		SS-5710D				Input signal			Dis-played value	Cali-brator
				Counter								
		CH1 connec-ted to:	CH2 connec-ted to:	FREQ	INT -EXT	LF -HF	Measure-ment range	Volt-age	Wave-form	Fre-quency		Cir-cuit No.
1	(1)	1P005 pin 1	1IC023 pin 2	IN (push)	INT	LF	0.1S	40 mV p-p	sine	10 MHz	–	1R020
2		3IC019 pin 28									10,000 kHz	1C056
3		–	–			HF					10 MHz	—
4	(2)				EXT			100 mV rms				

Item	Description
Check and adjustment	1. Adjust the A sweep level and set as in the diagram at right so that the waveform at 1P005 Pin 1 has a 1 : 1 duty ratio. Check that the waveform at 1IC023 pin 2 is as shown in the diagram at right. If it is not, adjust with 1R020 (see Fig. 6-13-1). 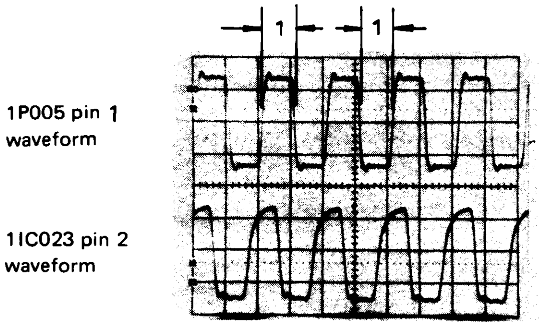
	2. Connect the CH1 probe to 3IC019 pin 28 (see Fig. 6-13-1) and check that the waveform is in the diagram at right. If it is not, adjust with 1C056 (see Fig. 6-13-1). After the two adjustments described above are completed, check that the display indicates 10,000 kHz. 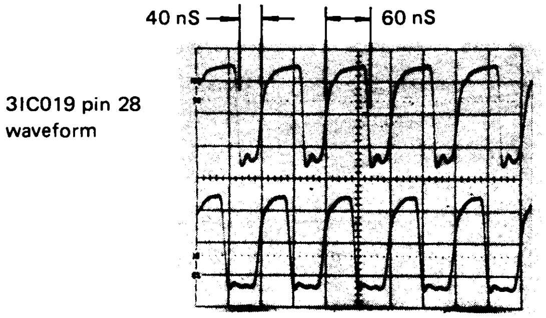 3. Set LF-HF to HF and check that the display indicates 10 MHz. 4. Set INT-EXT to EXT, apply the output of the standard signal generator to EXT INPUT [see Connection (2)], and check that the display indicates 10 MHz.

6-13-4 Standard Oscillator

<table>
<tr><th>Item</th><th>Description</th></tr>
<tr><td>Rating</td><td>10 MHz ±5 x 10^{-7}/week</td></tr>
<tr><td>Connection</td><td>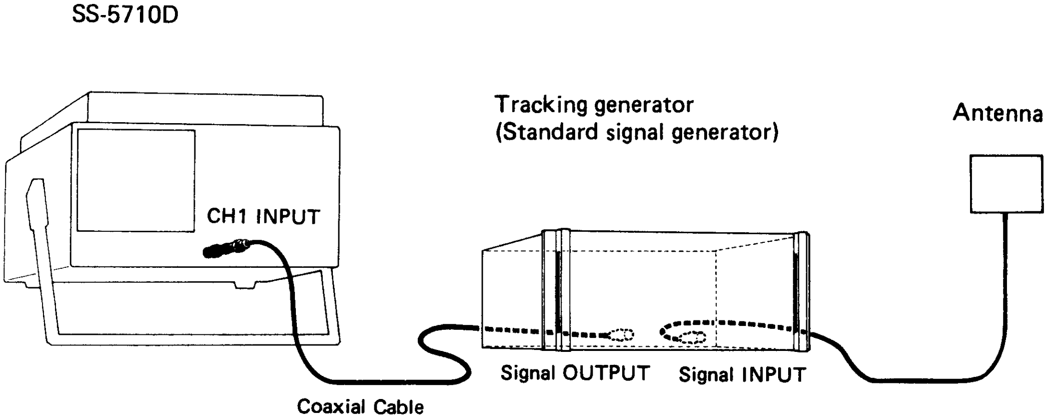 </td></tr>
<tr><td>Setting</td><td><table>
<tr><th colspan="4">SS-5710D</th><th>Input signal</th><th rowspan="2">Displayed valve</th><th>Calibrator</th></tr>
<tr><th>FREQ</th><th>INT-EXT</th><th>LF-HF</th><th>Measurement range</th><th>Frequency</th><th>Circuit No.</th></tr>
<tr><td>IN
(push)</td><td>INT</td><td>LF</td><td>IS</td><td>10 MHz</td><td>10000.000 kHz
or 9999.999</td><td>5C308</td></tr>
</table></td></tr>
<tr><td>Check and adjustment</td><td>Synchronized at the A sweep level and check that the displayed frequency is 10000.000 kHz or 9999.999 kHz. If it is neither, adjust with 5C308 (see Fig. 6-13-1).</td></tr>
</table>

6-13-5 PERIOD Measurement Mode

Item | **Description**

Connection

(1)

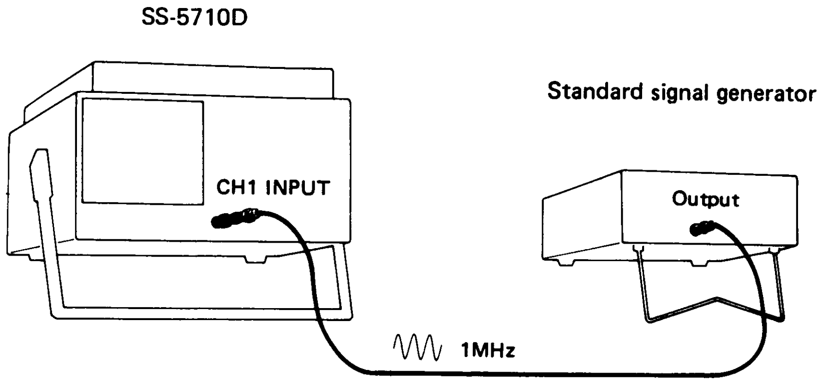

(2)

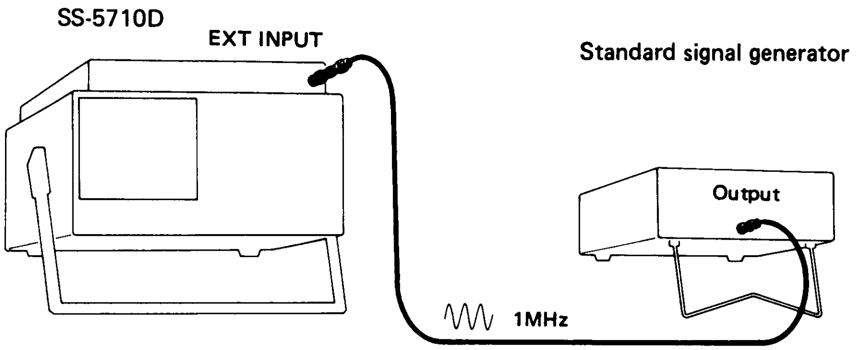

Setting

Sequence	Connection	SS-5710D				Input signal		Displayed value
		PERIOD	IN-EXT	LF-HF	Measurement range	Waveform	Frequency	
1	(1)	IN (push)	INT	LF	1 period	sine	1 MHz	1.0μS
2							Frequency increased	Indicator blinks at 0.4μS to 0.2μS
3	(2)		EXT	HF			1 MHz	1000.0nS

Check

1. Synchronize at the A sweep level and check that the displayed time is 1.0 μsec.
2. Increase the input repeat frequency and check that the unit display indicator blinks at a displayed value of between 0.4 μsec and 0.2 μsec.
3. Apply the standard signal generator output to EXT INPUT and check that the displayed value is 1000.0 nsec.

6-13-6 TIME INTERVAL Measurement Mode

Item	Description
Setting	TIME INT IN (push) A TIME/DIV 1 mSEC A sweep Free run sweep
Check and adjustment	1. Use an oscilloscope to measure the 2Q004 emitter waveform. Check that the amplitude of the sawtooth waveform is approximately 4 Vp-p (see diagram at right). If the error is too great, adjust with 2R033 (see Fig. 6-13-1). 2Q004 emitter waveform 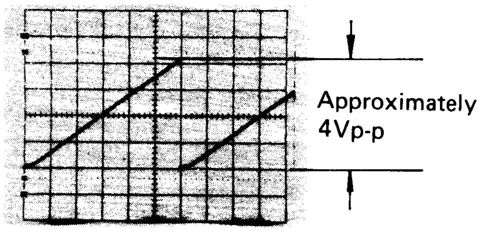
	2. Turn the START cursor as far as possible to the left and check that the start point of the brightness modulated portion is approximately 0.5 div. to the right of the sweep start point (see diagram at right). If the error is too great, adjust with 2R044 (see Fig. 6-13-1). 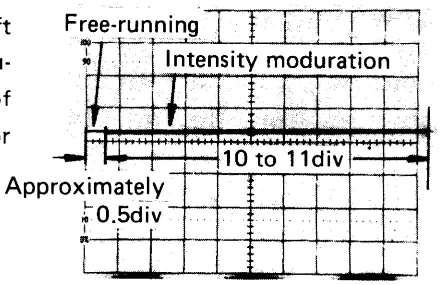
	3. Turn the START cursor as far as possible to the right and check that the brightness modulated portion is approximately 10.5div. in length. If the error is too great, adjust with 2R046 (see Fig. 6-13-1).
	4. Move the START and STOP cursors to set the length of the brightness modulated portion to 10 div. and check that the value on the display is approximately 10000.0 μsec.
	5. Move the START and STOP cursors to set the displayed value and check that the unit display indicator blinks when the displayed value is between 0.4 μsec and 0.2 μsec. If the indicator blinks at a value outside this range, adjust with 5R303 (see Figure 6-13-1).

6-13-7 DELAY TIME Measurement Mode

Item	Description
Setting	DELAY TIME IN (push) HORIZ DISPLAY A INTEN B sweep SOURCE RUNS AFTER DELAY
Check and adjustment	Turn DELAY TIME MULT and check that the delay time and displayed value are equal. Check that the unit display indicator blinks when the displayed value is between 0 4 μsec and 0.2 μsec.

6-13-8 A EVENT IN DELAY TIME Measurement Mode

<table>
<tr><th>Item</th><th>Description</th></tr>
<tr><td>Connection</td><td>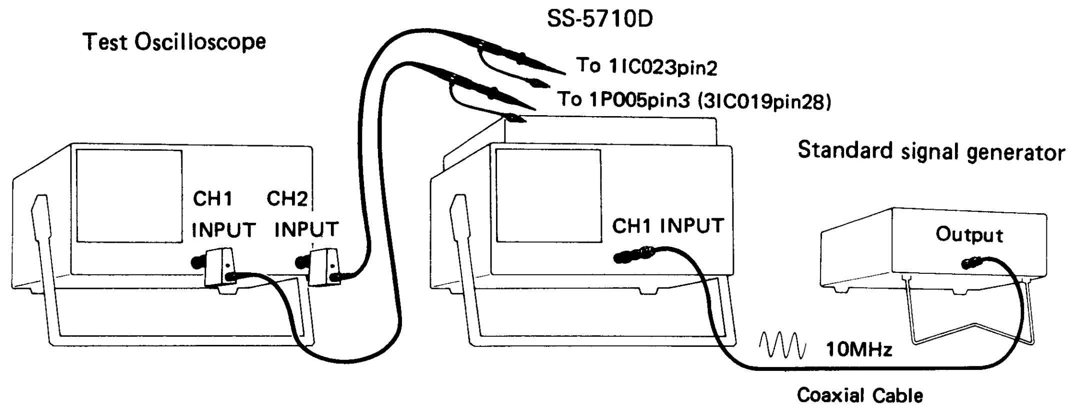
</td></tr>
<tr><td>Setting</td><td>
<table>
<tr><th rowspan="3">Sequence</th><th colspan="6">SS-5710D</th><th colspan="2" rowspan="2">Input signal</th><th rowspan="2">Calibrator</th></tr>
<tr><th colspan="5">Oscilloscope</th><th>Counter</th></tr>
<tr><th>HORIZ DISPLAY</th><th>A TIME/ DIV</th><th>B sweep source</th><th>B TIME/ DIV</th><th>A LEVEL</th><th>A EVENT IN D TIME</th><th>Waveform</th><th>Frequency</th><th>Circuit No.</th></tr>
<tr><td>1</td><td rowspan="2">A INTEN</td><td>1 ms</td><td rowspan="2">RUNS AFTER DELAY</td><td>10 µS</td><td rowspan="2">Synchro-nized</td><td rowspan="2">IN (push)</td><td rowspan="2">sine</td><td rowspan="2">10 MHz</td><td>1R071</td></tr>
<tr><td>2</td><td>0.1 µS</td><td>50 ns</td><td>–</td></tr>
</table>
</td></tr>
<tr><td>Check and adjustment</td><td>1. Connect CH1 of a measurement oscilloscope to 1P005 Pin 1, and CH2 to 1IC023 pin 2 and check that the waveform is as shown at right. If it is not, adjust with 1R071 (see Fig. 6-13-1).
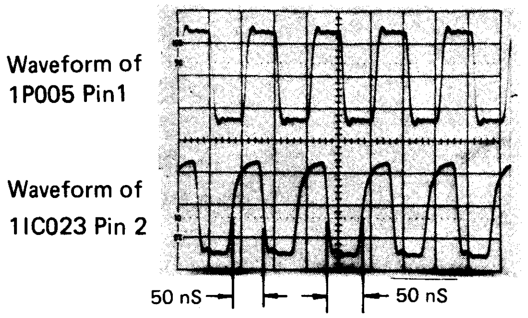

2. Set A TIME DIV to 0.1 µsec and B TIME/DIV to 50 nsec., turn DELAY TIME MULT, and check that 5 appears on the display when the waveform at right is on the screen.
Waveform on screen.
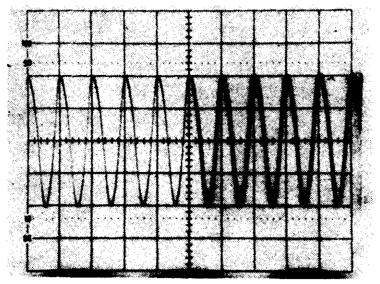</td></tr>
</table>

Figure 6-13-1 Adjustment and testpoint locations (COUNTER)

Top

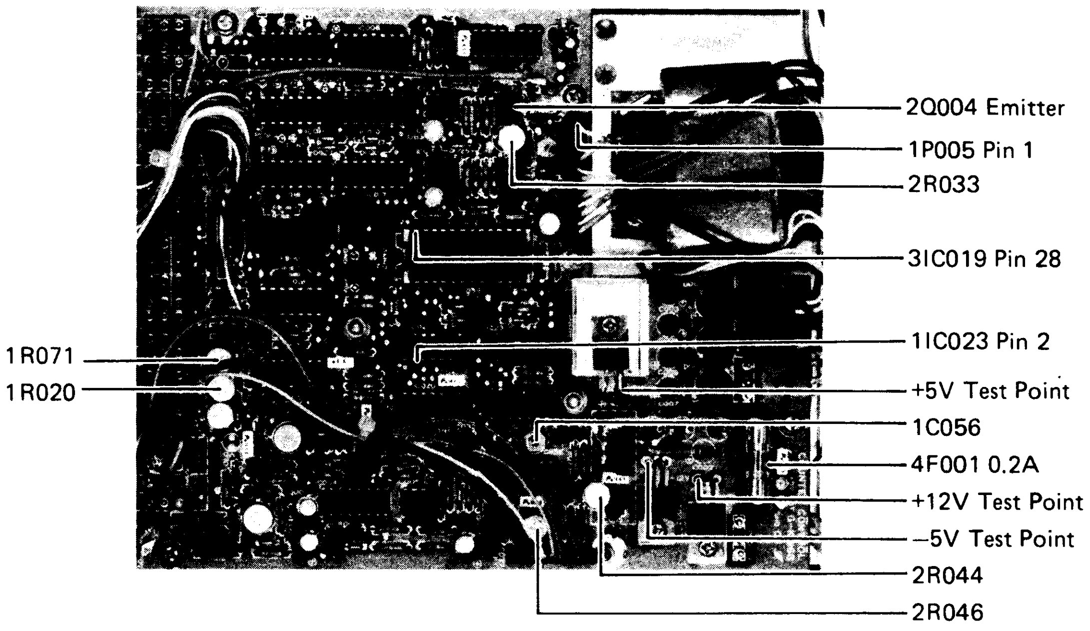

Right

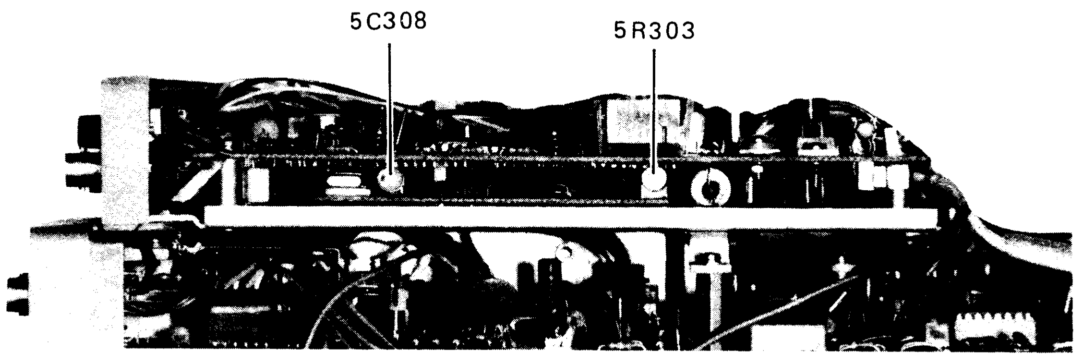

6-14 DIGITAL MULTIMETER

Caution

The digital multimeter circuit contains the following three types of GND. This point should be noted during checks and adjustment.

GND type	Circuit symbol
General GND (chassis)	⏚
Analog GND	▽
Digital GND	▼

6-14-1 Power Supply DC Level

<table>
<tr><th>Item</th><th>Description</th></tr>
<tr><td>Rating</td><td><table><tr><th>DC power voltage</th><th>Output voltage range</th></tr><tr><td>+5 V</td><td>Within ± 4%</td></tr><tr><td>–5 V</td><td>Within ± 10%</td></tr></table></td></tr>
<tr><td>Check</td><td>Measure the voltage between the test points (see Fig. 6-14-1) and check that they are within the ratings.</td></tr>
<tr><td>Check</td><td>*Caution*
Confirm that the voltage between 1F101 (see Figure. 6-14-1) and general GND (chassis) is within +5V ±10% before check.
1. Measure the voltage betwween + side of 1C101 (see Figure 6-14-1) and digital GND (–side of 1C101) with a digital multi-meter and check that the voltage is within +5V ± 4%.
2. Measure the voltage between –side of 1C105 (see Figure. 6-14-1) and digital GND (+side of 1C105) with a digital multimeter and check that the voltage is within –5V± 10%.</td></tr>
</table>

6-14-2 DC Voltage Measurement

<table>
<tr><th>Item</th><th>Description</th></tr>
<tr><td>Rating</td><td>200 mV to 200 V ±0.25% of rdg ±0.05% of range
1000 V ±0.25% of rdg ±0.1% of range</td></tr>
<tr><td>Setting</td><td>
<table>
<tr><th rowspan="2">Sequence</th><th colspan="3">SS-5710D</th><th rowspan="2">Input voltage</th><th rowspan="2">Display range</th><th colspan="2">Calibrator</th></tr>
<tr><th>Function</th><th>AC-DC</th><th>Range</th><th>Ciruict No.</th><th>Name</th></tr>
<tr><td rowspan="3">1</td><td rowspan="12">V</td><td rowspan="12">DC</td><td rowspan="3">200 mV</td><td>+190.0 mV</td><td>189.4 to 190.6</td><td>1R121</td><td>DC 200 mV ADJ</td></tr>
<tr><td>−190.0 mV</td><td>−189.4 to −190.6</td><td rowspan="2">–</td><td rowspan="2">–</td></tr>
<tr><td>Signal input terminal shorted</td><td>−00.1 to +00.1</td></tr>
<tr><td rowspan="3">2</td><td rowspan="3">2 V</td><td>+1.900 V</td><td>1.894 to 1.906</td><td>1R102</td><td>DC 2 V ADJ</td></tr>
<tr><td>−1.900 V</td><td>−1.894 to −1.906</td><td rowspan="8">–</td><td rowspan="8">–</td></tr>
<tr><td>Signal input terminal shorted</td><td>−00.1 to +00.1</td></tr>
<tr><td rowspan="2">3</td><td rowspan="2">20 V</td><td>+19.00 V</td><td>18.94 to 19.06</td></tr>
<tr><td>−19.00 V</td><td>−18.94 to −19.06</td></tr>
<tr><td rowspan="2">4</td><td rowspan="2">200 V</td><td>+190.0 V</td><td>189.4 to 190.6</td></tr>
<tr><td>−190.0 V</td><td>−189.4 to −190.6</td></tr>
<tr><td rowspan="2">5</td><td rowspan="2">2000 V</td><td>+1000 V</td><td>997 to 1003</td></tr>
<tr><td>−1000 V</td><td>−997 to −1003</td></tr>
</table>
</td></tr>
<tr><td>Check and adjustment</td><td>Select the range in accordance with the input voltage and check that the individual display values are within the display range. If the error is too great, adjust with 1R121 DC 200 mV ADJ for the 200 mV range (see Fig. 6-14-1) and with 1R 102 DC 2V ADJ for the 2 V range (see Fig. 6-14-1). Other ranges are checked only, no adjustments are required.</td></tr>
</table>

6-14-3 AC Voltage Measurement

<table>
<tr><th>Item</th><th>Description</th></tr>
<tr><td>Rating</td><td>
<table>
<tr><td>200 mV to 200 V</td><td>±0.75% of rdg ±0.25% of range</td></tr>
<tr><td>750 V</td><td>±10% of rdg ±0.4% of range</td></tr>
</table>
</td></tr>
<tr><td>Setting</td><td>
<table>
<tr><th rowspan="2">Adjustment sequence</th><th colspan="3">SS-5710D</th><th colspan="2">Input signal</th><th rowspan="2">Display range</th><th colspan="2">Calibrator</th></tr>
<tr><th>Function</th><th>AC-DC</th><th>Range</th><th>Voltage</th><th>Frequency</th><th>Circuit No.</th><th>Name</th></tr>
<tr><td rowspan="2">1</td><td rowspan="6">V</td><td rowspan="6">AC</td><td rowspan="2">200 mV</td><td>190.0 mV</td><td>100 Hz</td><td>188.1 to 191.9</td><td>1R137</td><td>AC V ADJ</td></tr>
<tr><td>Signal input terminal shorted</td><td>–</td><td>0.00 to 00.5</td><td rowspan="5">–</td><td rowspan="5">–</td></tr>
<tr><td>2</td><td>2 V</td><td>1.900 V</td><td>100 Hz</td><td>1.881 to 1.919</td></tr>
<tr><td>3</td><td>20 V</td><td>19.00 V</td><td rowspan="3">500 Hz</td><td>18.18 to 19.19</td></tr>
<tr><td>4</td><td>200 V</td><td>190.0 V</td><td>188.1 to 191.9</td></tr>
<tr><td>5</td><td>2000 V</td><td>750 V</td><td>740 to 760</td></tr>
</table>
</td></tr>
<tr><td>Check and adjustment</td><td>Select the range in accordance with the input voltage and check that the individual display values are within the display range. If the error is too great, adjust with 1R137 AC V ADJ for the 200 mV range (see Fig. 6-14-1).
Other ranges are checked only, no adjustments are required.</td></tr>
</table>

6-14-4 Resistance Measurement

<table>
<tr><th>Item</th><th>Description</th></tr>
<tr><td>Rating</td><td>
<table>
<tr><td>200 Ω to 200 kΩ</td><td>±0.25% of rdg ±0.05% of range</td></tr>
<tr><td>20000 kΩ</td><td>±0.5% of rdg ±0.1% of range</td></tr>
<tr><td>20 MΩ</td><td>±2% of rdg ±0.1% of range</td></tr>
</table>
</td></tr>
<tr><td>Setting</td><td>
<table>
<tr><th rowspan="2">Sequence</th><th colspan="2">SS-5710D</th><th rowspan="2">Measure Resistor</th><th rowspan="2">Display Range</th><th colspan="2">Calibrator</th></tr>
<tr><th>Function</th><th>Range</th><th>Circuit No.</th><th>Name</th></tr>
<tr><td>1</td><td rowspan="7">Ω</td><td rowspan="2">200 Ω</td><td>0 (Shorted)</td><td>00.00 to 00.1</td><td>1R129</td><td>200Ω 0 ADJ</td></tr>
<tr><td>2</td><td>190.0 Ω</td><td>189.4 to 190.6</td><td>1R147</td><td>200 Ω ADJ</td></tr>
<tr><td>3</td><td>2 kΩ</td><td>1.900 kΩ</td><td>1.894 to 1.906</td><td rowspan="5">–</td><td rowspan="5">–</td></tr>
<tr><td>4</td><td>20 kΩ</td><td>19.00 kΩ</td><td>18.94 to 19.06</td></tr>
<tr><td>5</td><td>200 kΩ</td><td>190.0 kΩ</td><td>189.4 to 190.6</td></tr>
<tr><td>6</td><td>2000 kΩ</td><td>1900 kΩ</td><td>1889 to 1911</td></tr>
<tr><td>7</td><td>20 MΩ</td><td>19.00 MΩ</td><td>18.60 to 19.40</td></tr>
</table>
</td></tr>
<tr><td>Check and adjustment</td><td>
Caution
Use measuring leads and high resistance cables (optional) when checking performance and adjusting.
When using input cables, the resistance of the cables must be considered.
Use shielded wire for input cables. Ensure that these cables and the resistor being measured is not touched during testing.

Select the range in accordance with the resistor being measured and check that the individual display values are within the display range. If the error is too great, adjust with 1R129 200 Ω 0 ADJ and 1R147 200 Ω ADJ (see Fig. 6-14-1). Other ranges are checked only, no adjustments are required.
</td></tr>
</table>

6-14-5 DC Current Measurement

<table>
<tr><th>Item</th><th>Description</th></tr>
<tr><td>Rating</td><td>2 mA to 200 mA ±0.8% of rdg ±0.05% of range
2000 mA ±2% of rdg ±0.05% of range</td></tr>
<tr><td>Setting</td><td>
<table>
<tr><th colspan="3">SS-5710D</th><th rowspan="2">Input current</th><th rowspan="2">Display range</th></tr>
<tr><th>Function</th><th>AC-DC</th><th>Range</th></tr>
<tr><td rowspan="5">A</td><td rowspan="5">DC</td><td rowspan="2">2 mA</td><td>0</td><td>.000 to .001</td></tr>
<tr><td>1.900 mA</td><td>1.884 to 1.916</td></tr>
<tr><td>20 mA</td><td>19.00 mA</td><td>18.84 to 19.16</td></tr>
<tr><td>200 mA</td><td>190.0 mA</td><td>188.4 to 191.6</td></tr>
<tr><td>2000 mA</td><td>1900 mA</td><td>1861 to 1939</td></tr>
</table>
</td></tr>
<tr><td>Check</td><td>Select the range in accordance with the resistor being measured and check that the individual display values are within the display range.</td></tr>
</table>

6-14-6 AC Current Measurement

<table>
<tr><th>Item</th><th>Description</th></tr>
<tr><td>Rating</td><td>±2% of rdg ±0.25% of range</td></tr>
<tr><td>Setting</td><td>
<table>
<tr><th colspan="3">SS-5710D</th><th colspan="2">Input current</th><th rowspan="2">Display range</th></tr>
<tr><th>Function</th><th>AC-DC</th><th>Range</th><th>Current</th><th>Frequency</th></tr>
<tr><td rowspan="5">A</td><td rowspan="5">AC</td><td rowspan="2">2 mA</td><td>0 mA</td><td>–</td><td>.000 to .005</td></tr>
<tr><td>1.900 mA</td><td rowspan="4">500 Hz</td><td>1.857 to 1.943</td></tr>
<tr><td>20 mA</td><td>19.00 mA</td><td>18.57 to 19.43</td></tr>
<tr><td>200 mA</td><td>190.0 mA</td><td>185.7 to 194.3</td></tr>
<tr><td>2000 mA</td><td>1900 mA</td><td>1857 to 1943</td></tr>
</table>
</td></tr>
<tr><td>Check</td><td>Select the range in accordance with the resistor being measured and check that the individual display values are within the display range.</td></tr>
</table>

Figure 6-14-1 Adjustment locations (DIGITAL MULTIMETER)

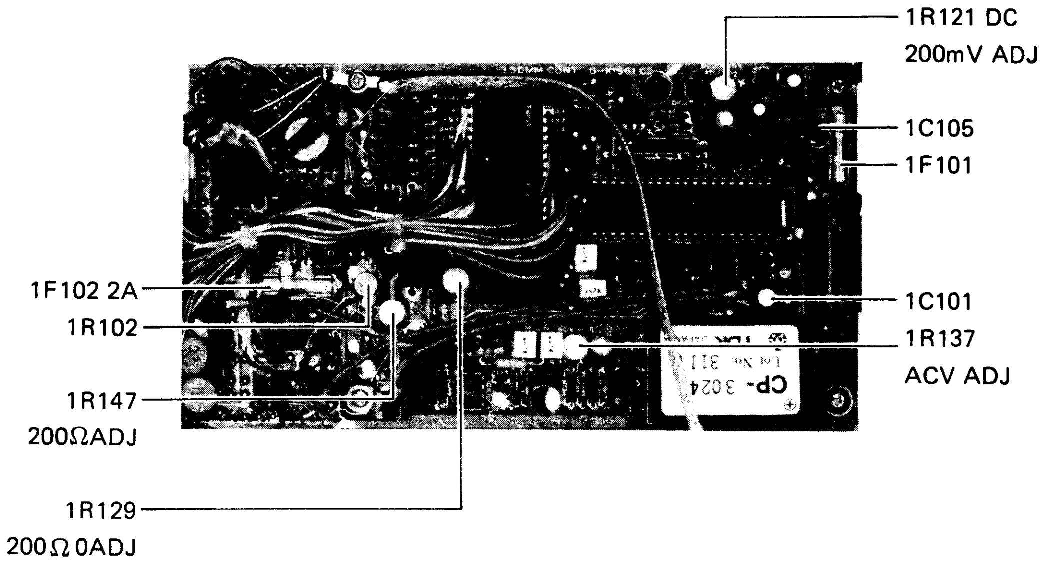

NOTES

Section 7

Schematic Diagrams

Voltages and Waveforms

In the schematic diagrams, the voltages and waveforms in the normal operation of the instrument are as shown.

They are useful for troubleshooting.

These voltages and waveforms are measured according to the following conditions:

1. The CAL 1KHz 0.6V connector is connected to the INPUT connector by 10 : 1 passive prove as the test signal.
2. Exceptions in the controls setting are shown by "VOLTAGE & WAVEFORM READING CONDITIONS" noted on the schematic diagram. Beside, the asterisks maked on the diagram show the point measured by the excepitional settings.
3. The waveforms starting from the negative slope are measured by setting the SLOPE switch of a test oscilloscope to (–).
4. The switches and controls of this instrument is set as follows:

—Power supply & CRT circuit—

POWER	ON
SCALE	Arbitrary position
INTEN	Best desired
FOCUS	Best focused display

—Vertical deflection system—

AC-GND-DC (CH1-2)	DC
VOLTS/DIV	10mV/div
VARIABLE (CH1-2)	CAL
AC-DC	DC
0.1V-1V	0.1V
POSITION (CH1,2,3,4)	Mid position
MODE	CH1
CH2 POLAR	NORM (■)
BANDWIDTH	FULL (■)

—Horizontal deflection system—

HORIZONTAL	A
MODE	AUTO
A TIME/DIV	1mS/div
A VARIABLE	CAL
B TIME/DIV	1mS/div
DELAY TIME MULT	Counter-clockwise Set the start portion of the trace to the left-end of vertical graticule.
FINE (Pull x 10 MAG)	Push Mid position
HOLD OFF	NORM (Counter-clockwise)

—Trigger system—

SOURCE	CH1
COUPLING	AC
LEVEL-SLOPE (pull–)	Push, Trigger

①

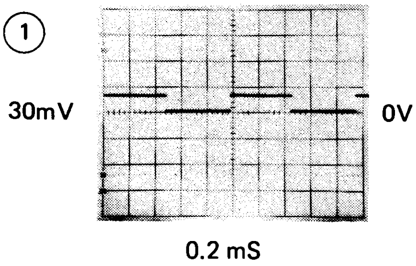

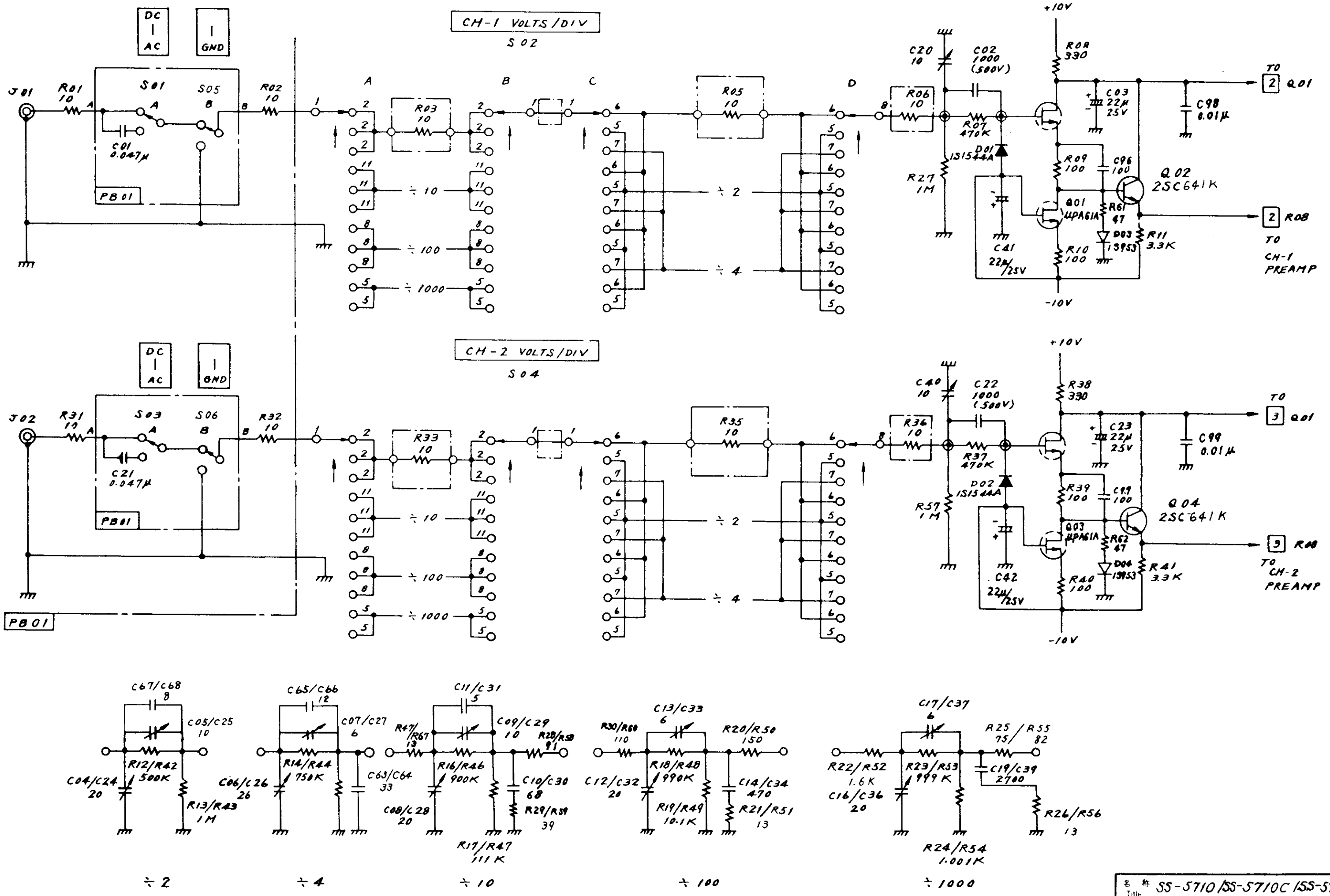

名 称 Title SS-5710/SS-5710C/SS-5710D

CH-1&CH-2 ATTENUATOR 1

図 番 Drwg. No. BBWSS24020102 4

①

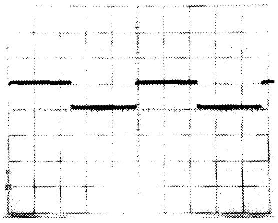

0.2 mS
AC COUPLED

②

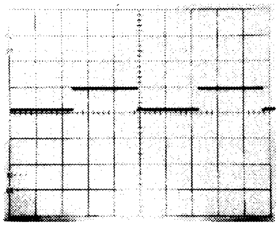

0.2 mS
AC COUPLED

③

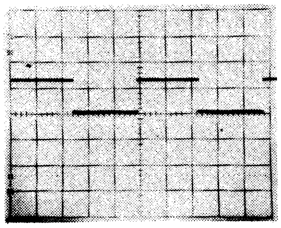

0.2 mS

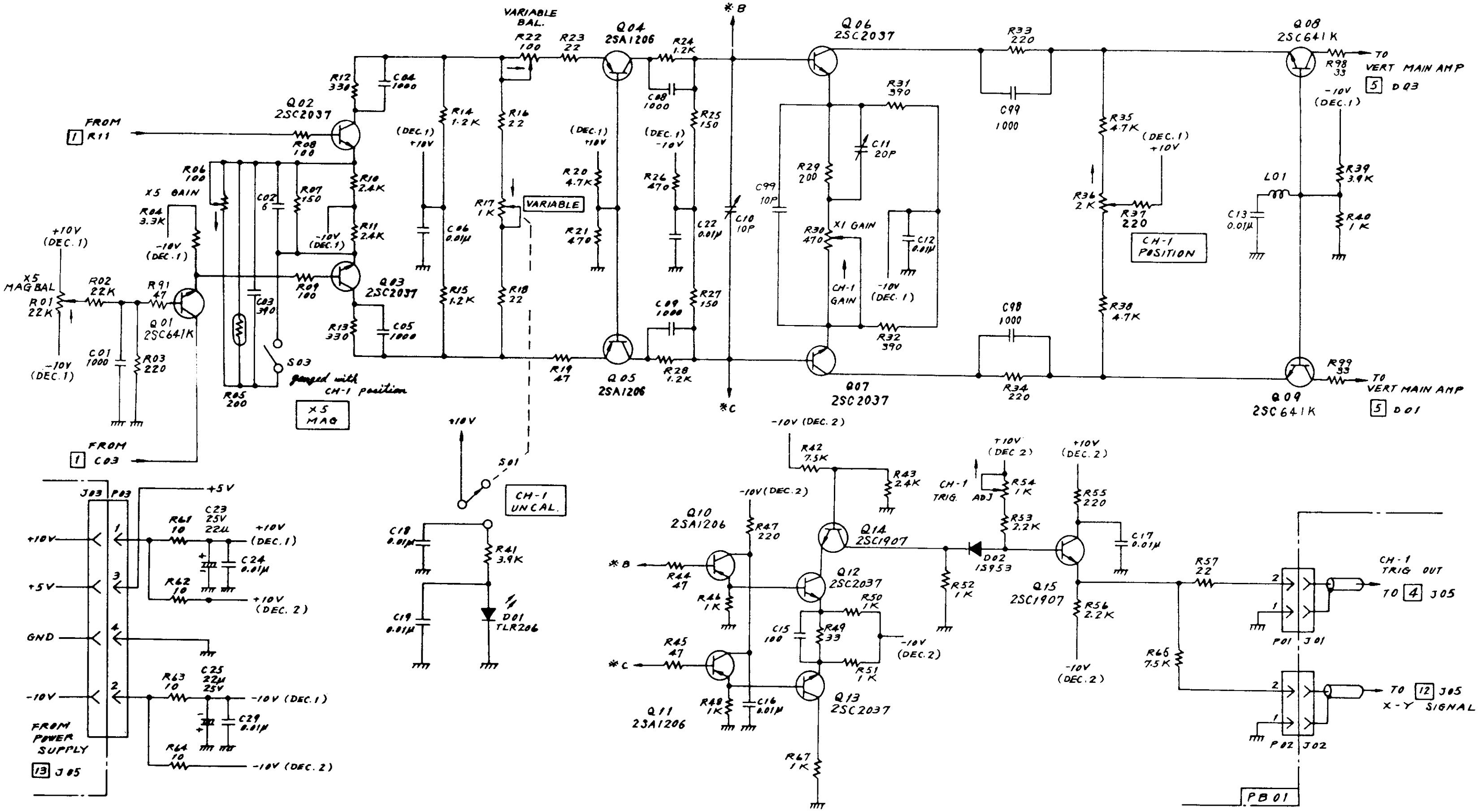

Title SS-5710/SS-5710C/SS-5710D
SS-5783

CH-1 PRE-AMPLIFIER 2

Drwg No.
BBWSS 24021102 3

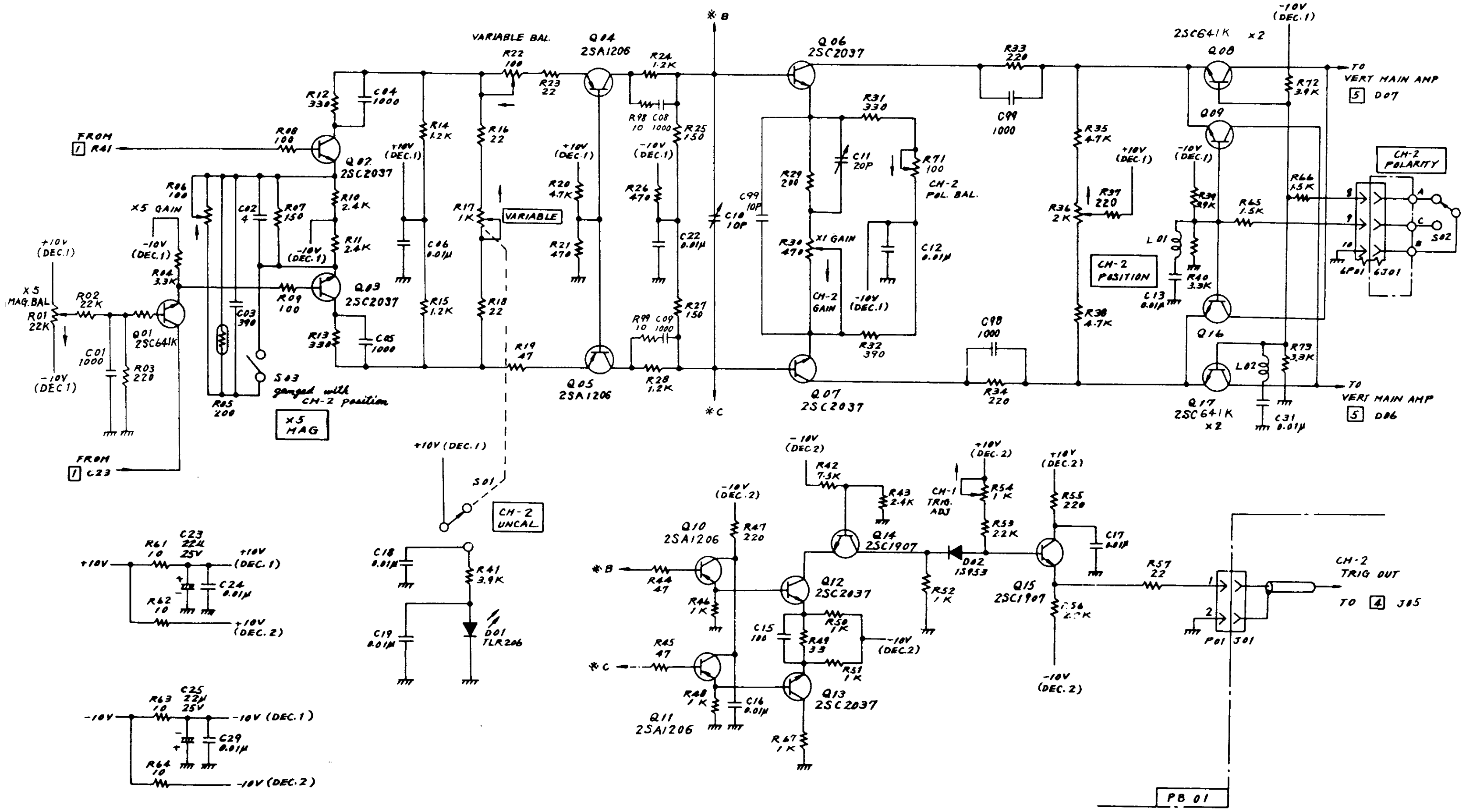

Title SS-5710/SS-5710C/SS-5710D
SS-5783

CH-2 PRE-AMPLIFIER 3

Drwg No

BBWSS 24022102 3

①

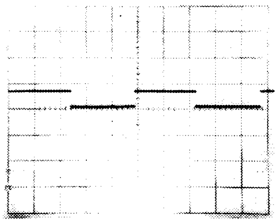

②

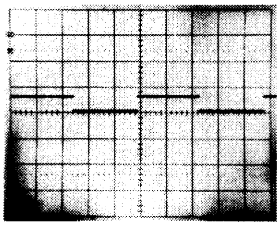

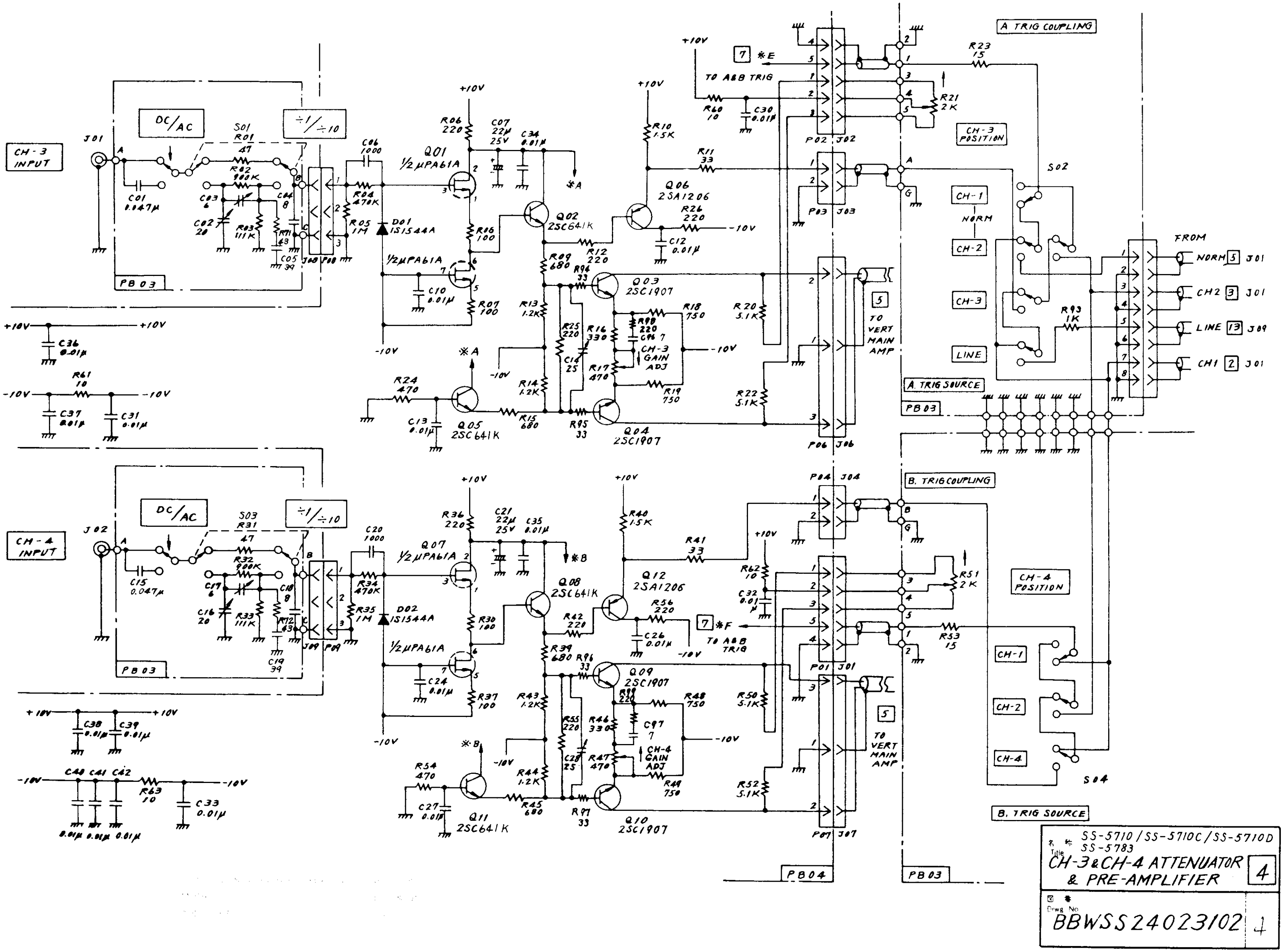

名称 Title
SS-5710/SS-5710C/SS-5710D
SS-5783

CH-3 & CH-4 ATTENUATOR & PRE-AMPLIFIER

4

図番 Drwg No

BBWSS24023102

4

①

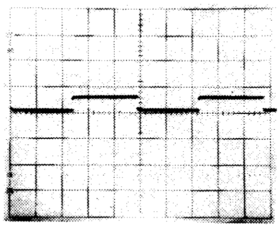

50mV ≈ +4V

0.2 mS

AC COUPLED

②

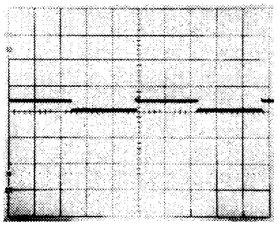

40mV ≈ +4V

0.2 mS

AC COUPLED

③

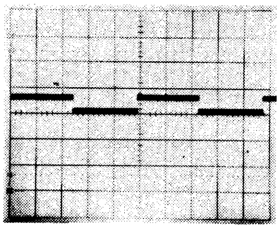

5V ≈+25V

0.2 mS

④

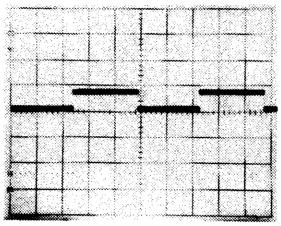

6V ≈+25V

0.2 mS

⑤

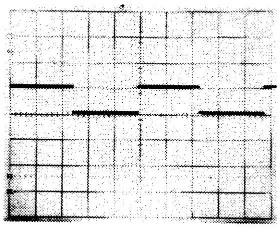

1V 0V

0.2 mS

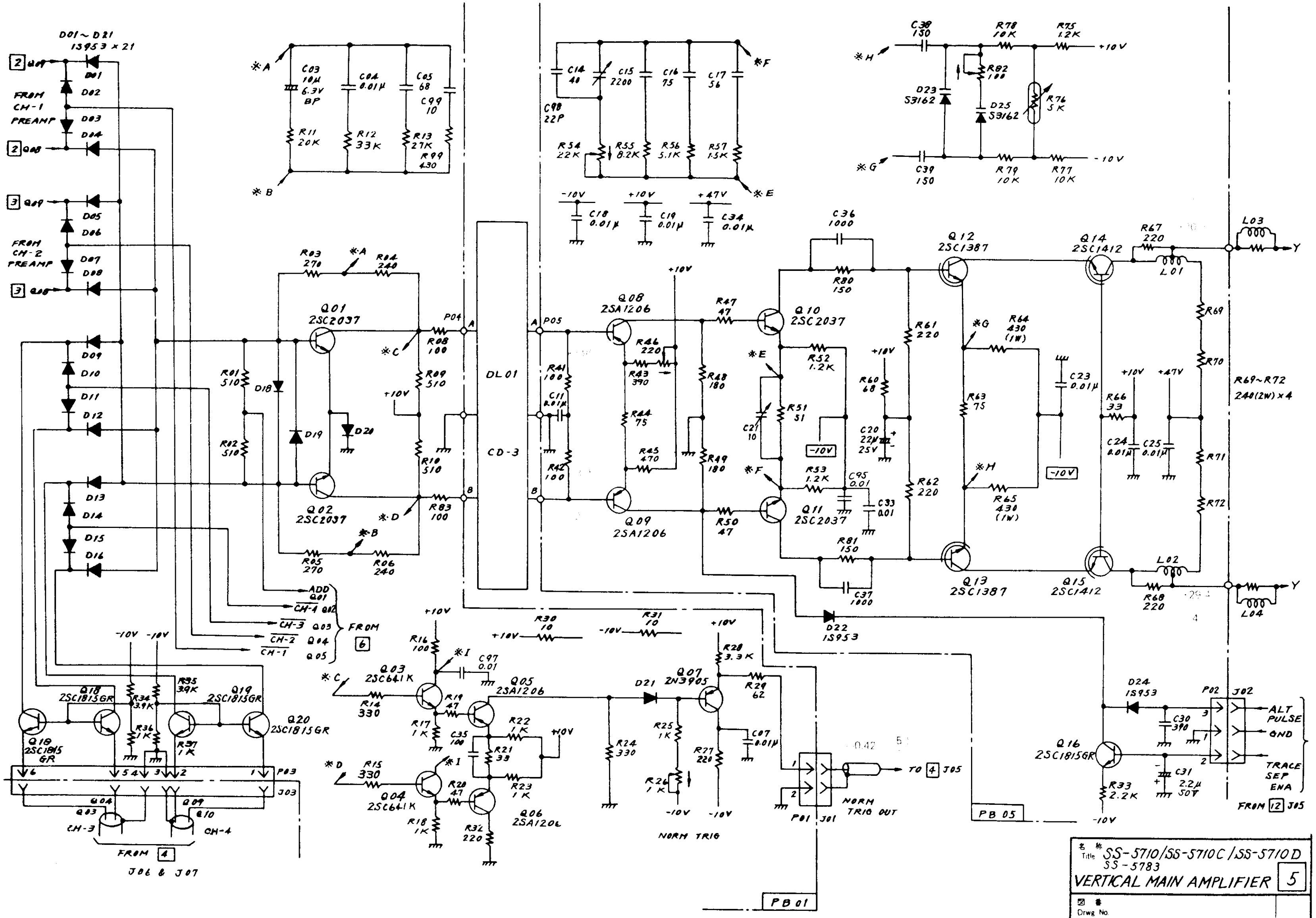

Title SS-5710/SS-5710C/SS-5710D
SS-5783

VERTICAL MAIN AMPLIFIER 5

Drwg No.

BBWSS24024102 3

* ①

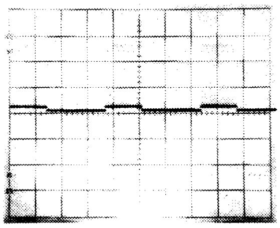

1.5V ≈+1.2V

5 mS

** ②

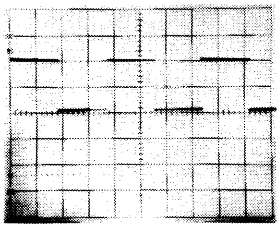

4V ≈+1V

10 mS

* ③

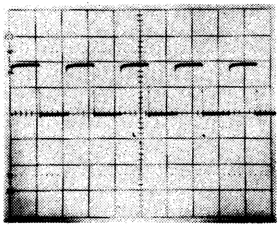

4V ≈+1V

2μS

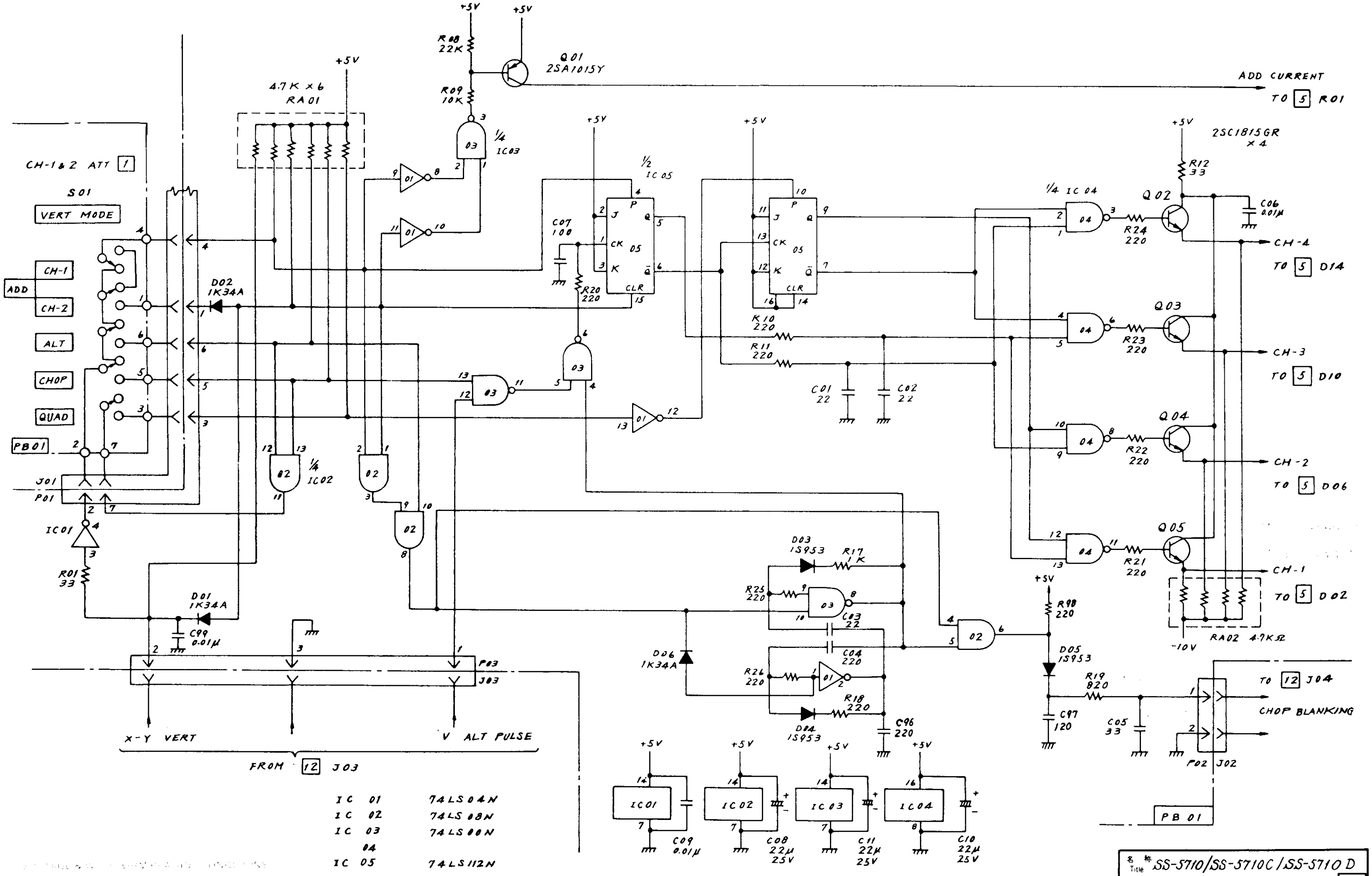

名称 Title SS-5710/SS-5710C/SS-5710D

VERTICAL CONTROL 6

図番 Drwg No. BBWSS10004102 3

①

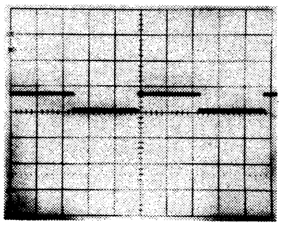
0.6V
0V
0.2 mS

*②

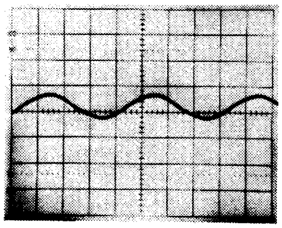
1V
0V
5 mS

③

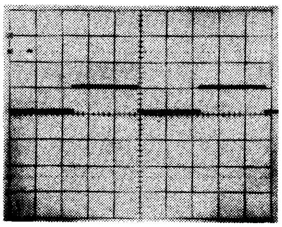
2V
≈+3V
0.2 mS

④

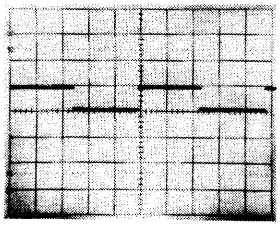
0.9V
≈+3V
0.2 mS

⑤

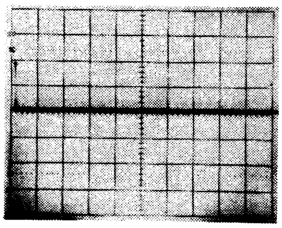
4V
0V
1 μS

**⑥

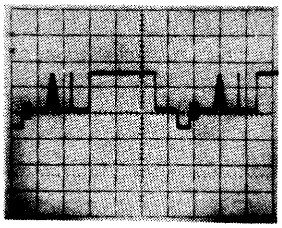
0.2V
0V
10 μS

**⑦

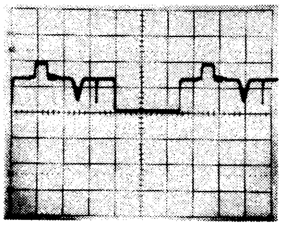
2V
0V
10 μS

**⑧

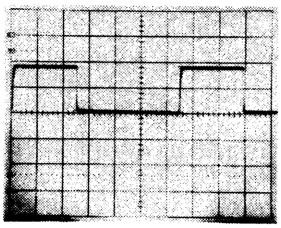
8V
0V
10 μ S

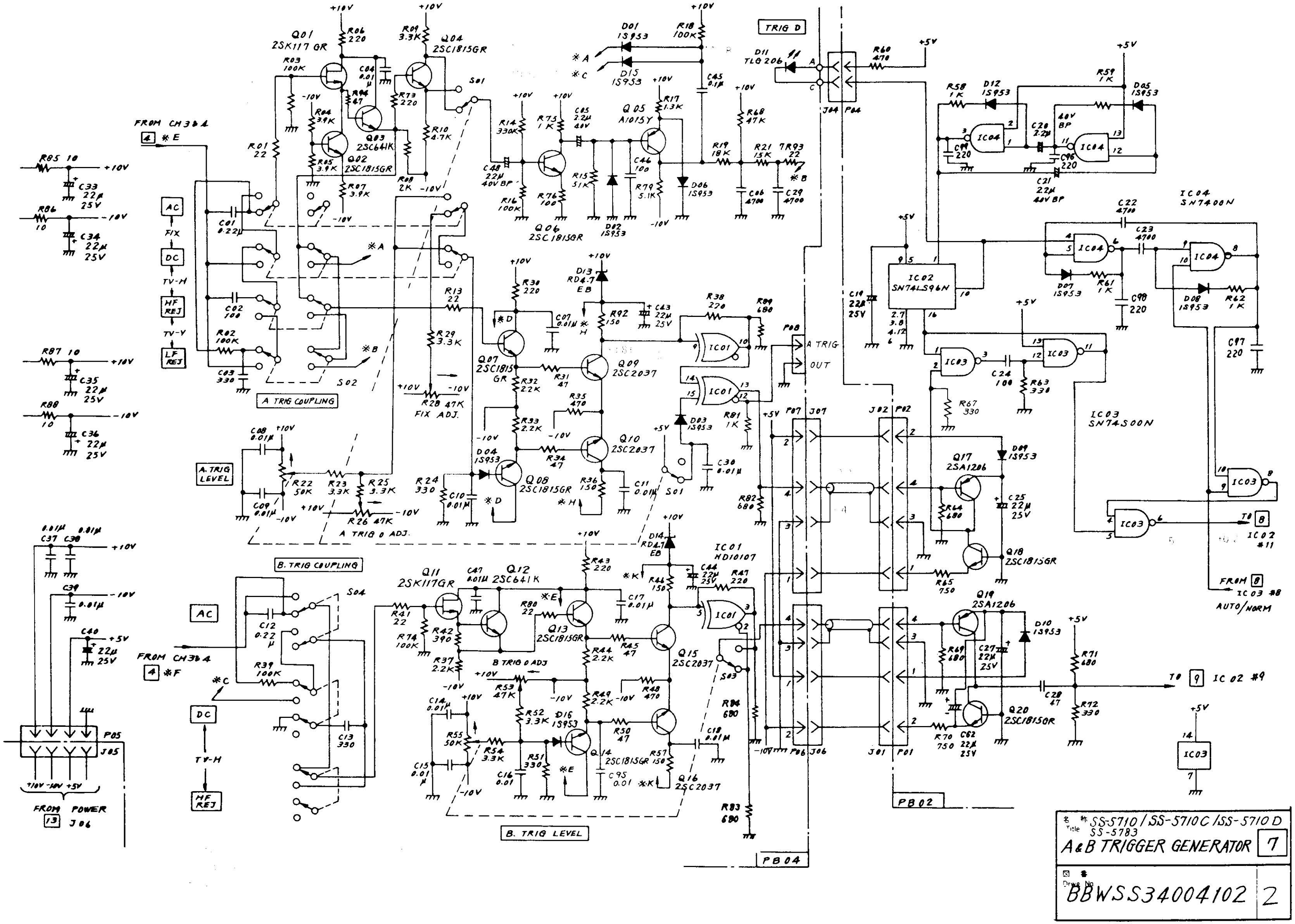

SS-5710/SS-5710C/SS-5710D
SS-5783
A&B TRIGGER GENERATOR 7

BBWSS34004102 2

①

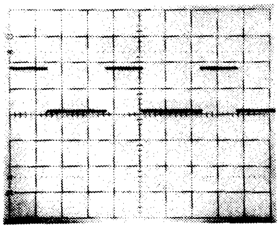

②

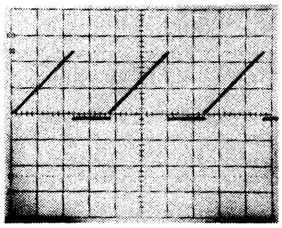

③

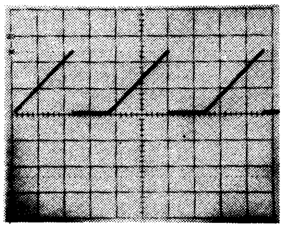

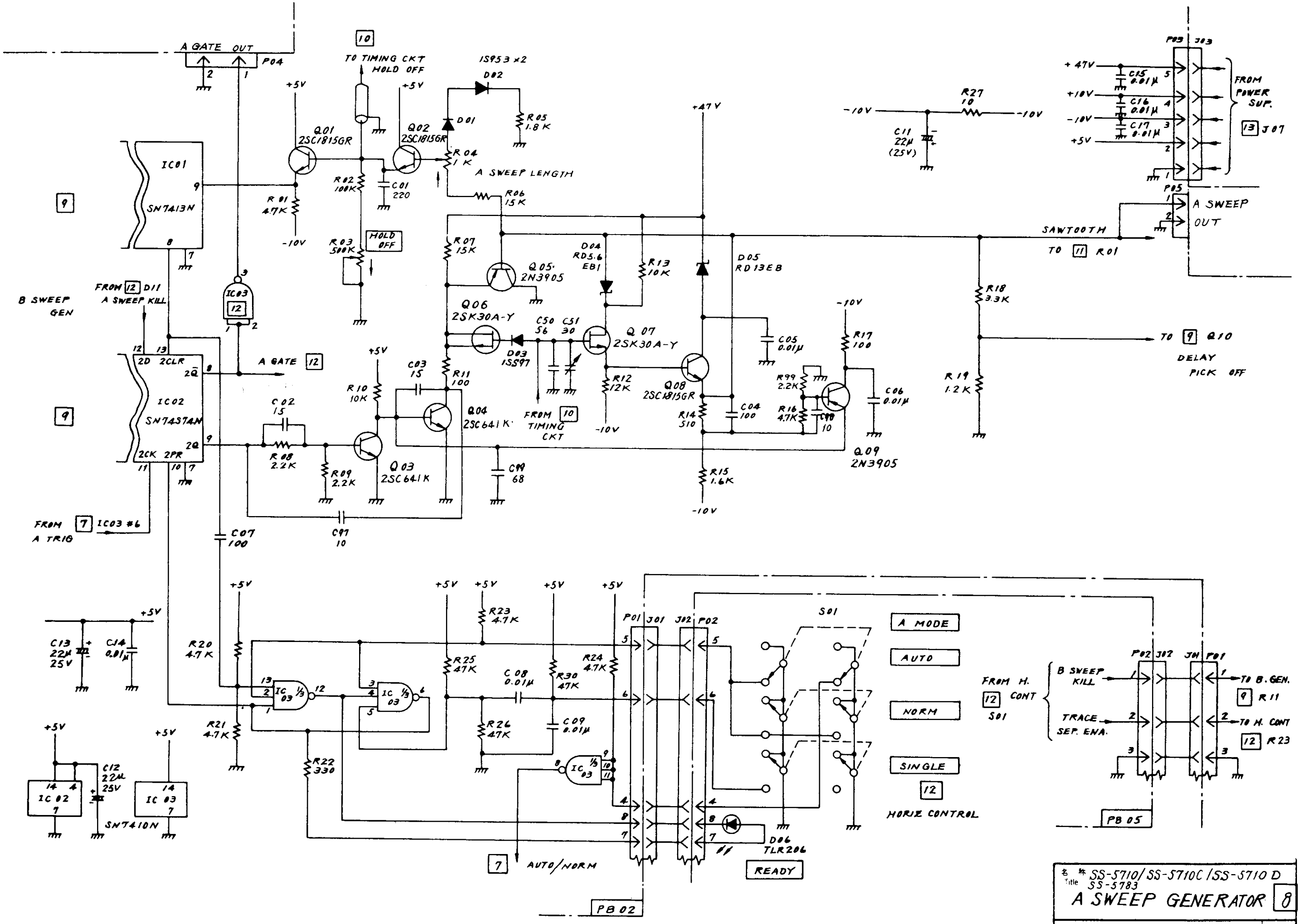

名 称 Title SS-5710/SS-5710C/SS-5710D
SS-5783

A SWEEP GENERATOR 8

図 番 Drwg No BBWSS20007102 3

①

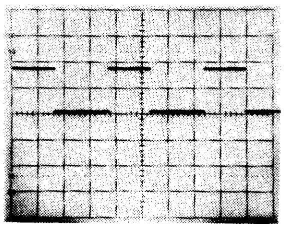

②

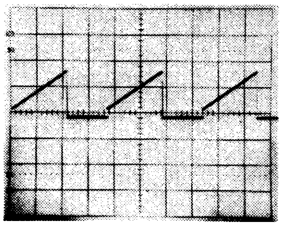

③

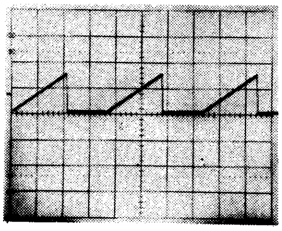

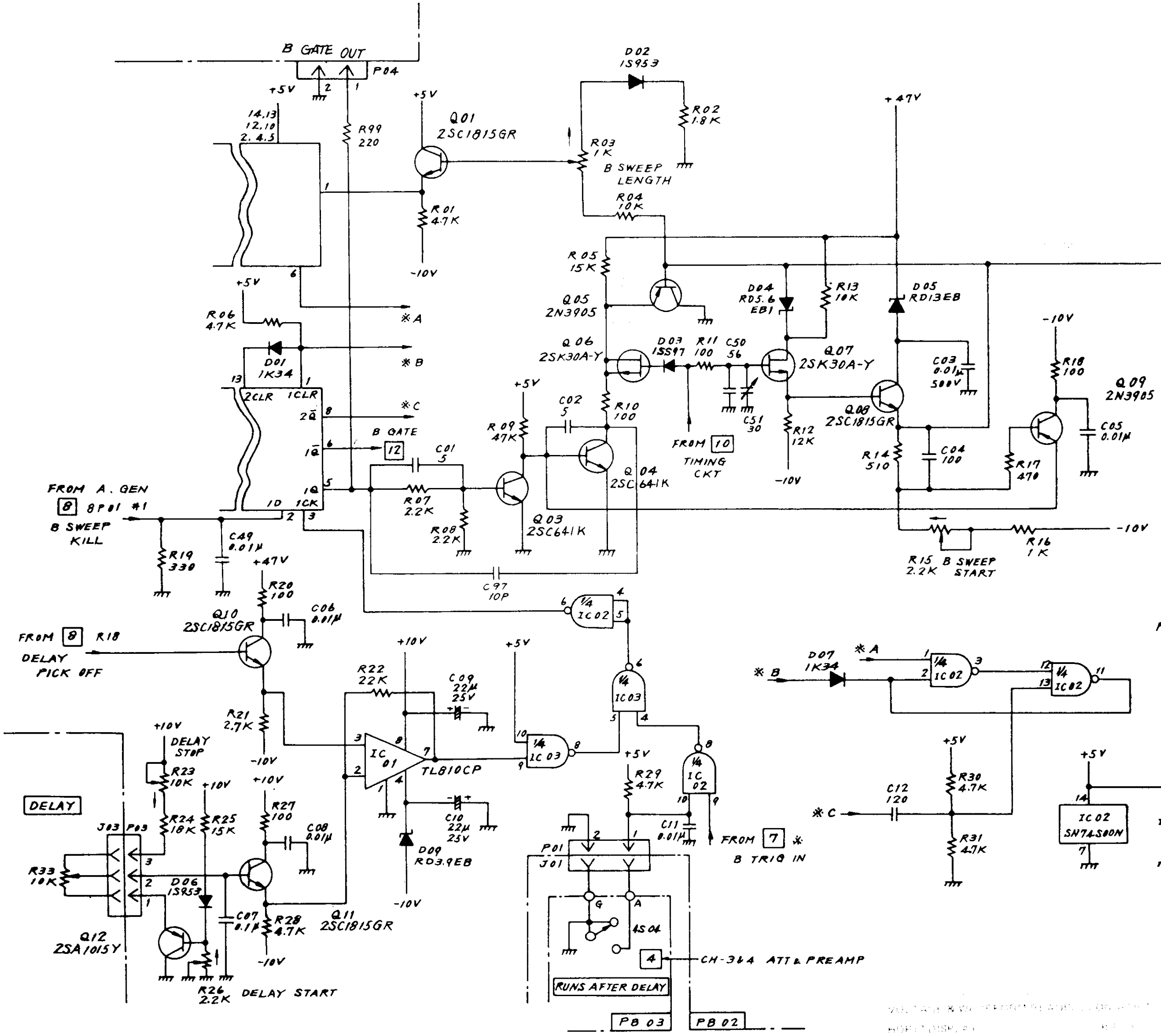

Title SS-5710/SS-5710C/SS-5710 D
SS-5783

B SWEEP GENERATOR 9

Drwg. No. BBWSS20008102 2

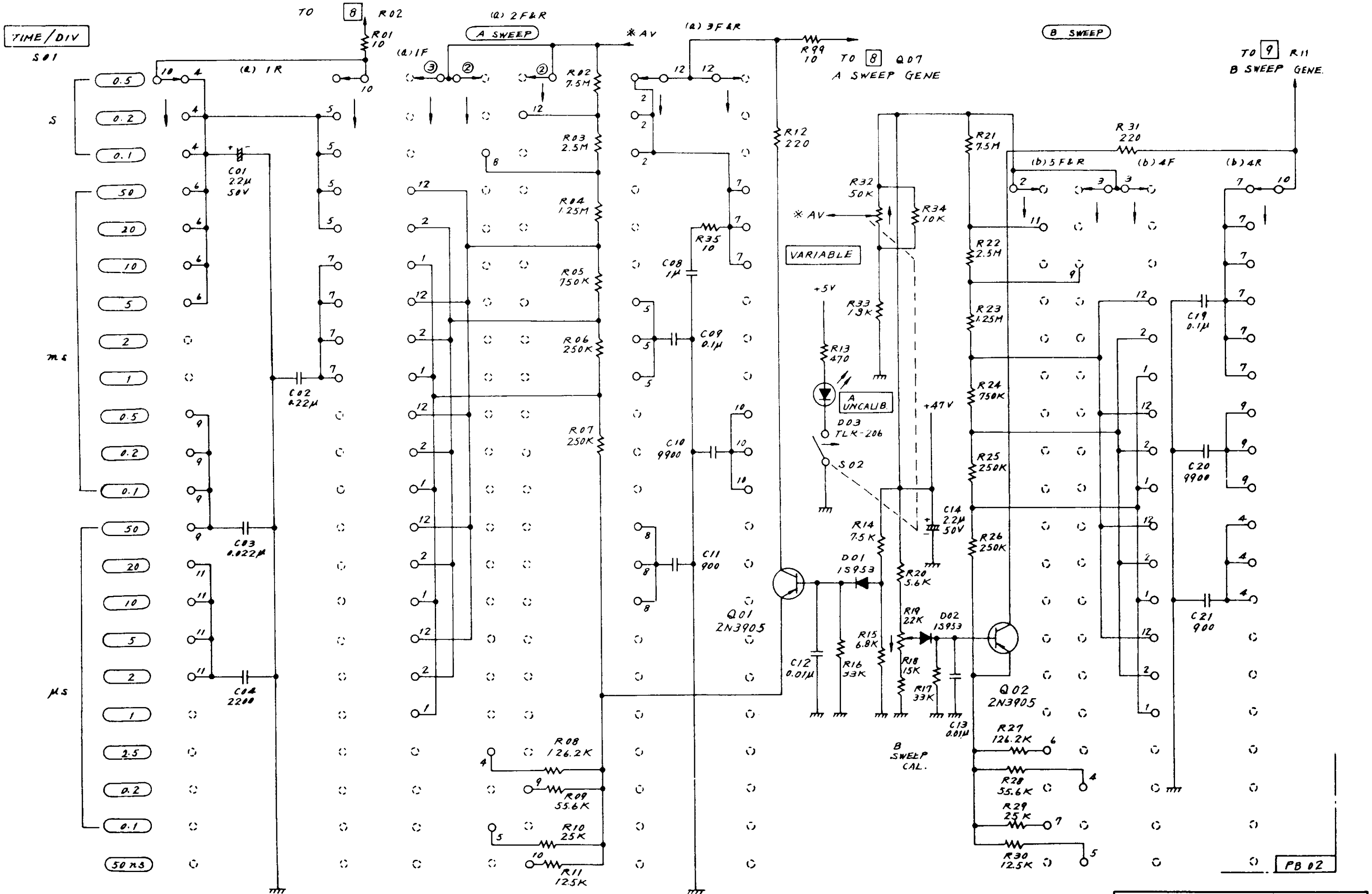

名称 Title SS-5710/SS-5710C/SS-5710D

A&B TIMING CIRCUIT 10

図番 Drwg No BBWSS20009102 2

①

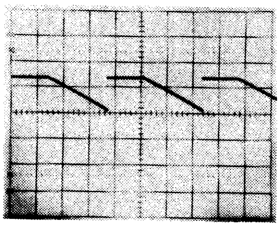

②

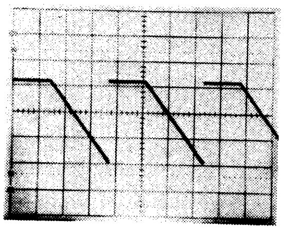

*③

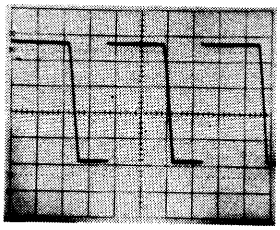

④

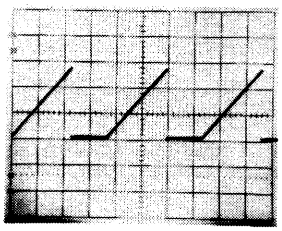

*⑤

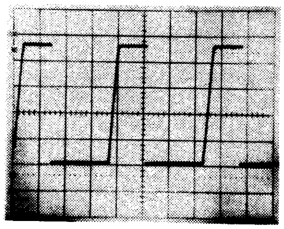

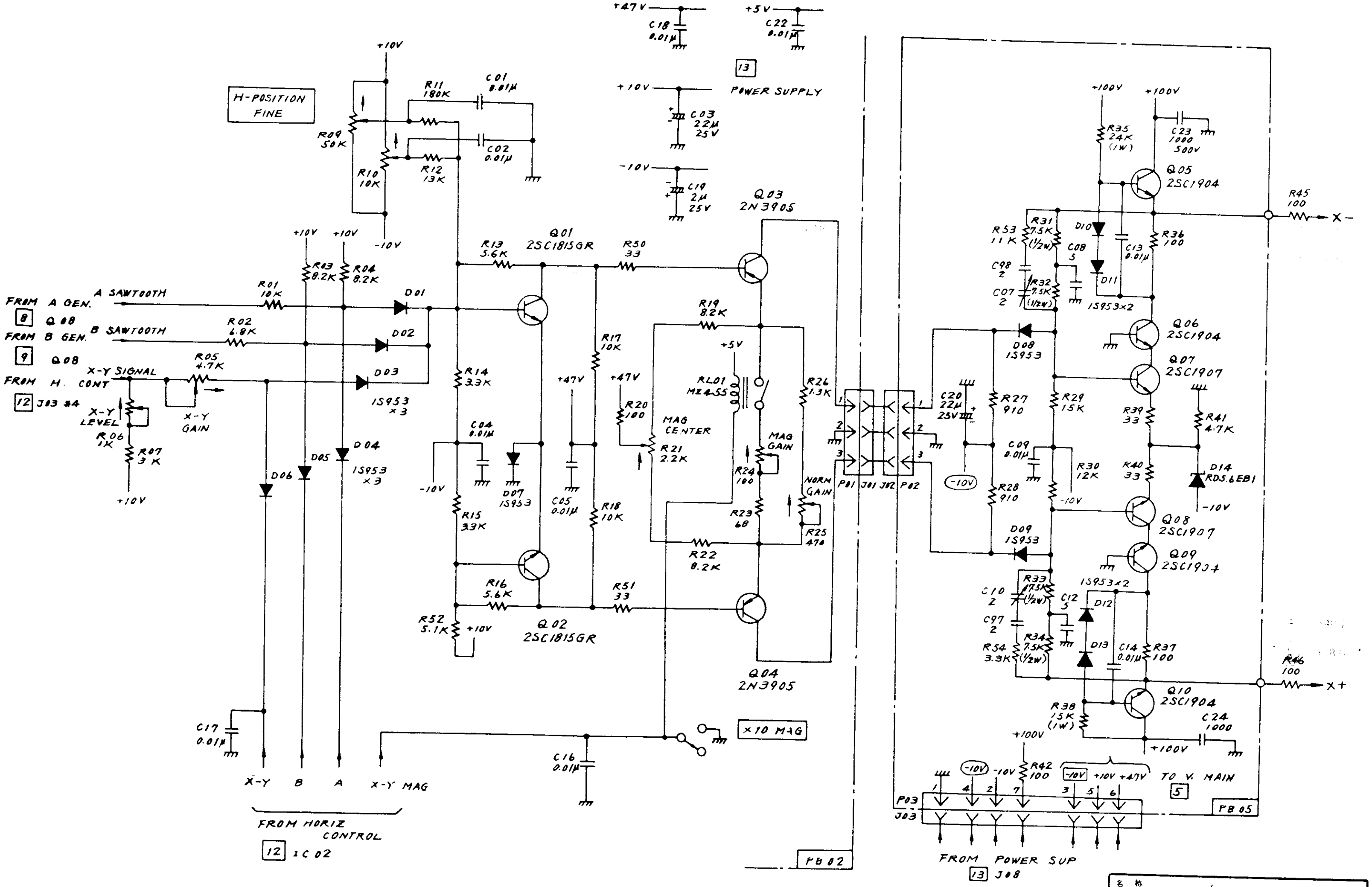

名称 Title SS-5710/SS-5710C/SS-5710D

HORIZONTAL AMPLIFIER 11

図番 Drwg No

BBWSS24025102 2

①

4V

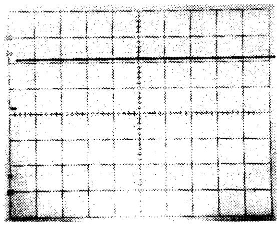

≈+4V

1 μS

②

80mV

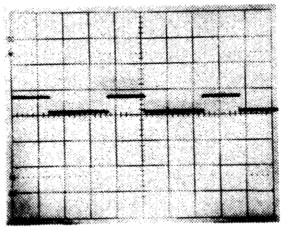

≈+1V

5 mS

AC COUPLED

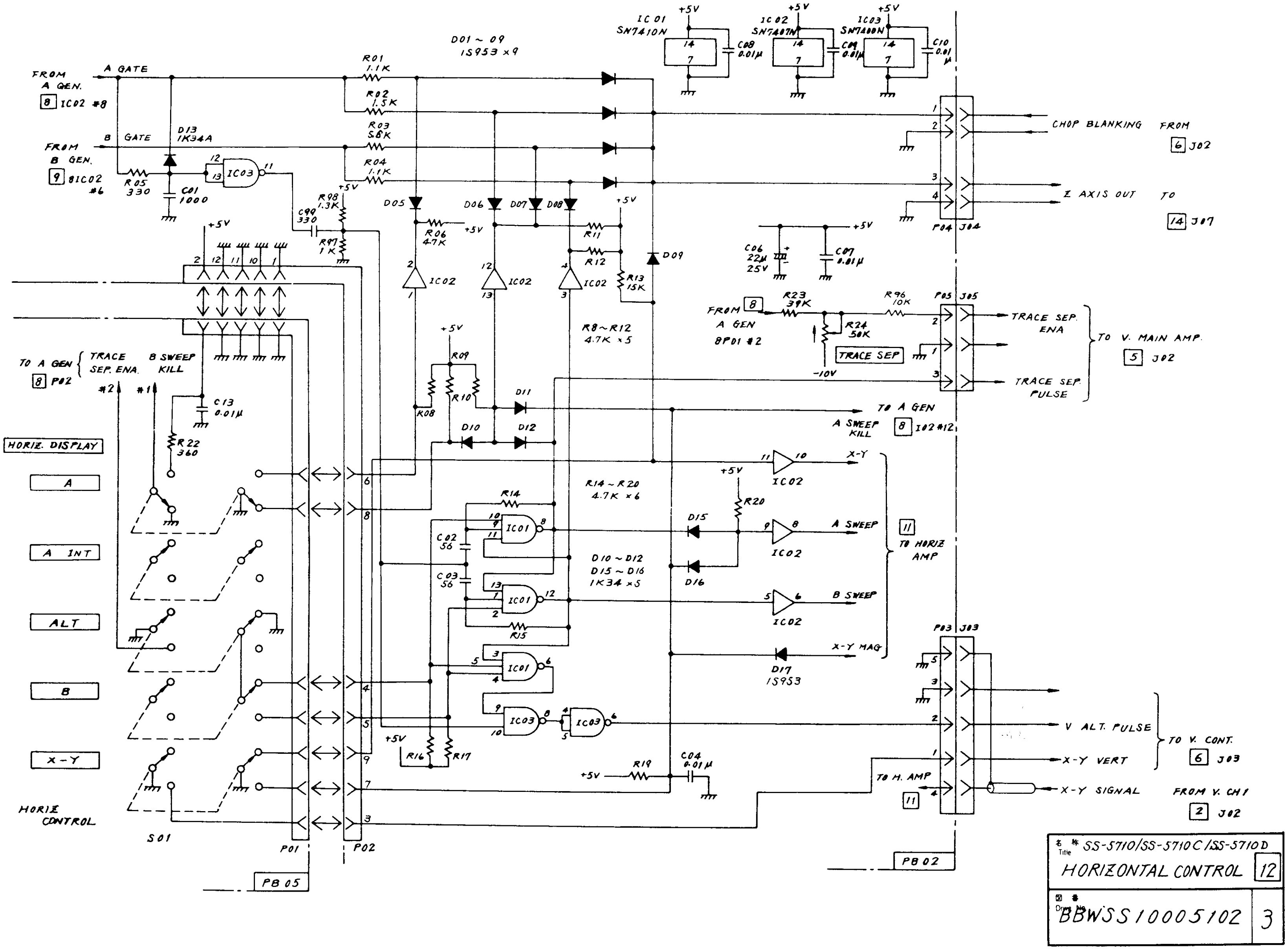
FROM A GEN.
8 IC02 #8
A GATE
FROM B GEN.
9 8IC02 #6
B GATE
D13 1K34A
R05 330
C01 1000
IC03
R01 1.1K
R02 1.5K
R03 5.6K
R04 1.1K
D01 ~ 09 1S953 x9
IC01 SN7410N
IC02 SN7407N
IC03 SN7400N
+5V
C08 0.01μ
C09 0.01μ
C10 0.01μ
14
7
CHOP BLANKING
FROM 6 J02
Z AXIS OUT
TO 14 J07
P04 J04
R98 1.3K
C99 330
R97 1K
D05
R06 4.7K
D06
D07
D08
R11
R12
R13 15K
D09
C06 22μ 25V
C07 0.01μ
FROM 8 A GEN 8P01 #2
R23 39K
R24 50K
R96 10K
TRACE SEP
-10V
P05 J05
TRACE SEP. ENA
TO V. MAIN AMP.
5 J02
TRACE SEP. PULSE
R8 ~ R12 4.7K x5
R09
R10
R08
D11
D10
D12
TO A GEN
A SWEEP KILL
8 J02 #12
TO A GEN
8 P02
TRACE SEP. ENA.
B SWEEP KILL
#2
#1
C13 0.01μ
R22 360
HORIZ. DISPLAY
A
A INT
ALT
B
X-Y
HORIZ CONTROL
S01
P01
P02
PB 05
R14 ~ R20 4.7K x6
R14
R20
D15
D16
D10 ~ D12
D15 ~ D16
1K34 x5
C02 56
C03 56
R15
IC01
IC02
X-Y
A SWEEP
B SWEEP
X-Y MAG
11 TO HORIZ AMP
D17 1S953
P03 J03
V ALT. PULSE
X-Y VERT
TO V. CONT.
6 J03
X-Y SIGNAL
FROM V. CH1
2 J02
TO H. AMP
11
R16
R17
R19
C04 0.01μ
PB 02
SS-5710/SS-5710C/SS-5710D
HORIZONTAL CONTROL
12
BBWSS10005102
3

①

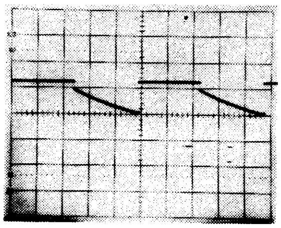

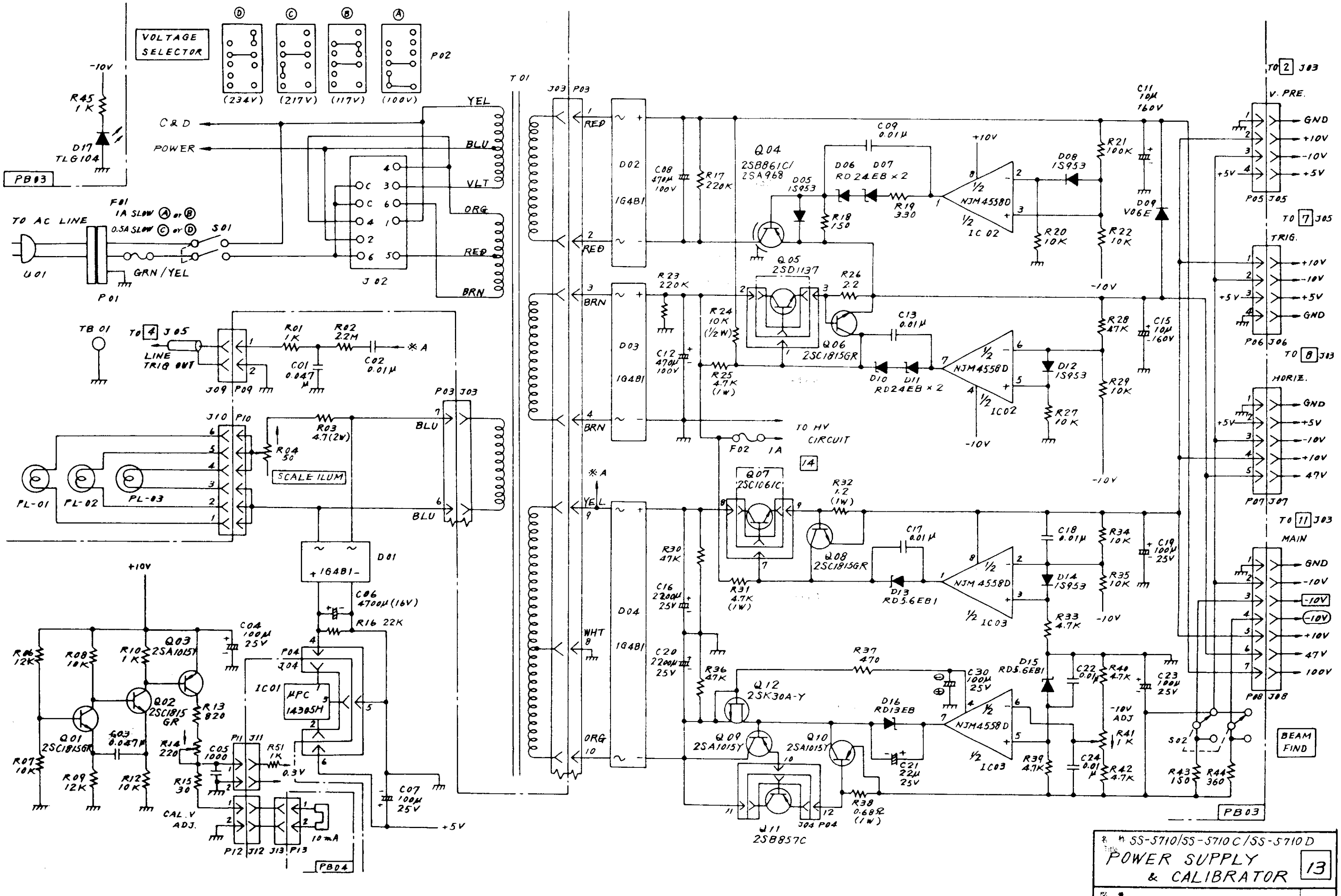

SS-5710/SS-5710C/SS-5710D

POWER SUPPLY & CALIBRATOR

13

BBWSSC8006102 3

①

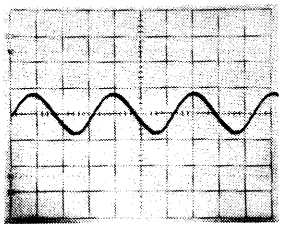
70V
≈+50V
10 μ S

②

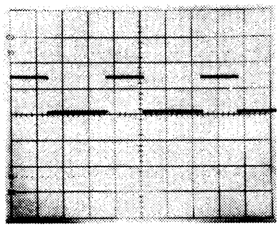
0.6V
≈+3.5V
5μ S

③

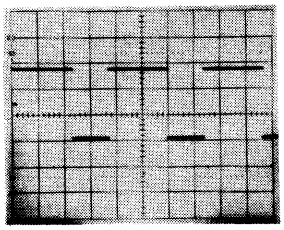
27V
≈+5V
5 mS

* ④

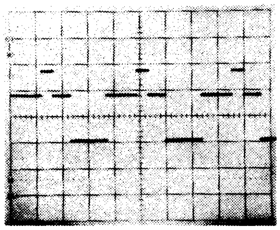
27V
≈+5V
5 mS

** ⑤

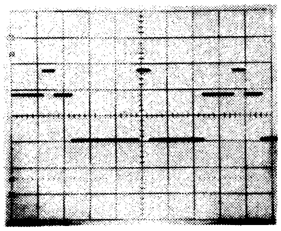
27V
≈ +5V
5 mS

*** ⑥

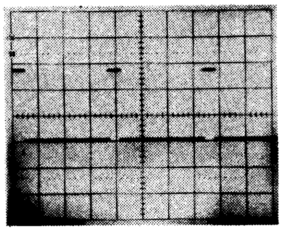
27V
≈+5V
5 mS

**** ⑦

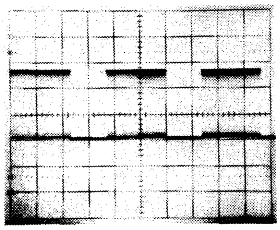
27V
≈+5V
5 mS

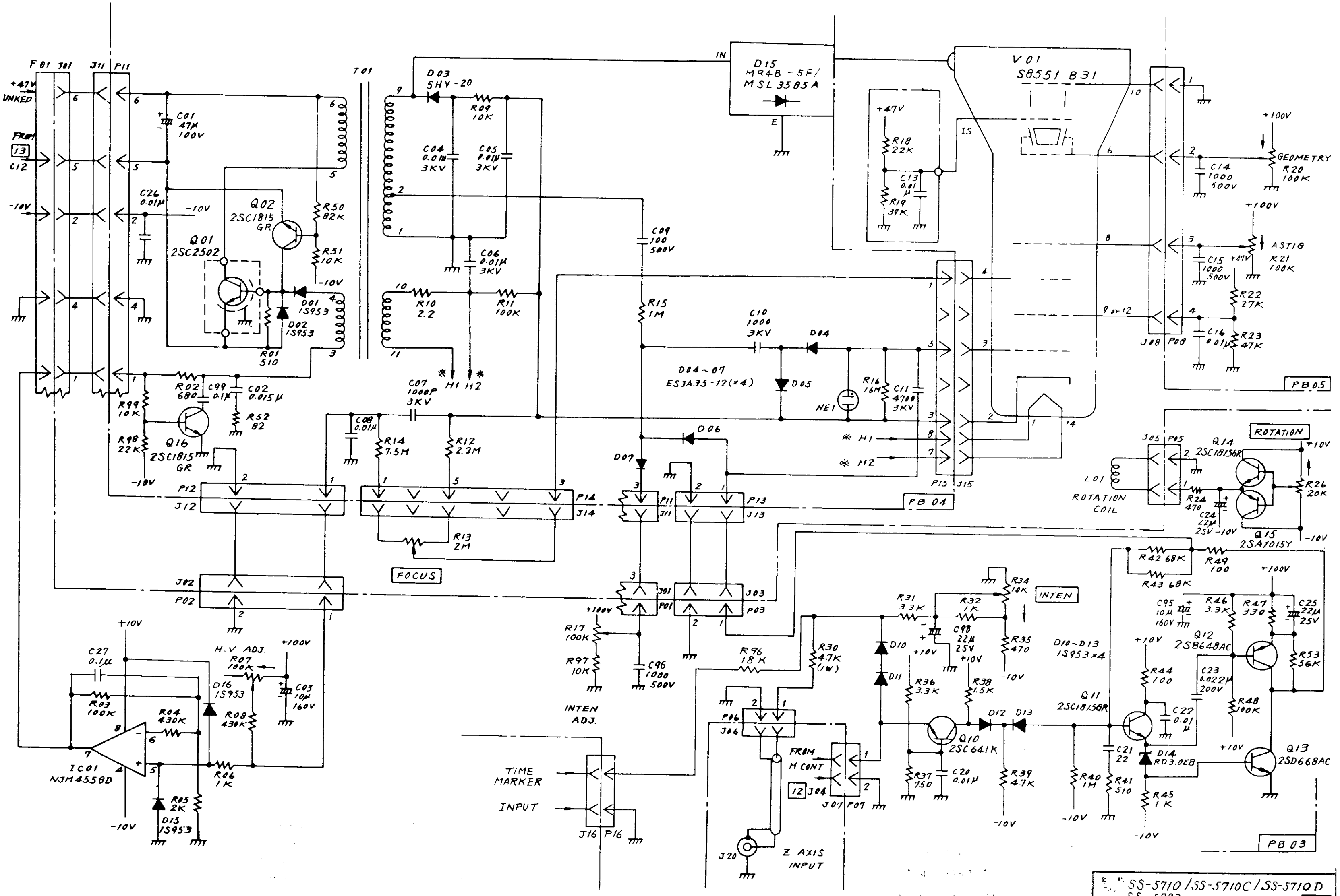

SS-5710/SS-5710C/SS-5710D
SS-5783

Z AXIS & CRT CIRCUIT 14

BBWSS41002102 2

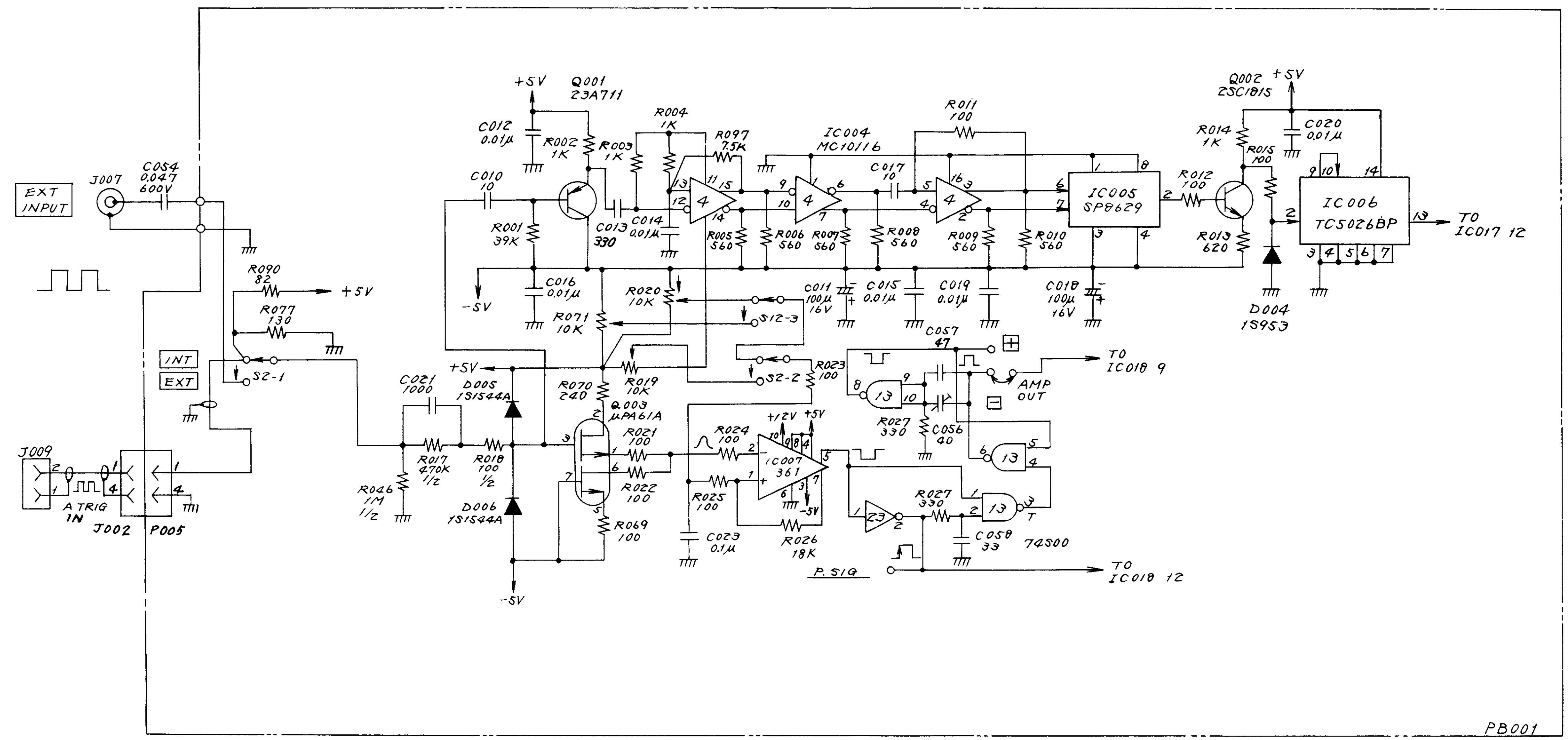

SS-5710C/SS-5710D/SS-5711C/SS-5711D
1/100 PRESCALER & INPUT AMPLIFIER 1

BBWSS 3/001106 3

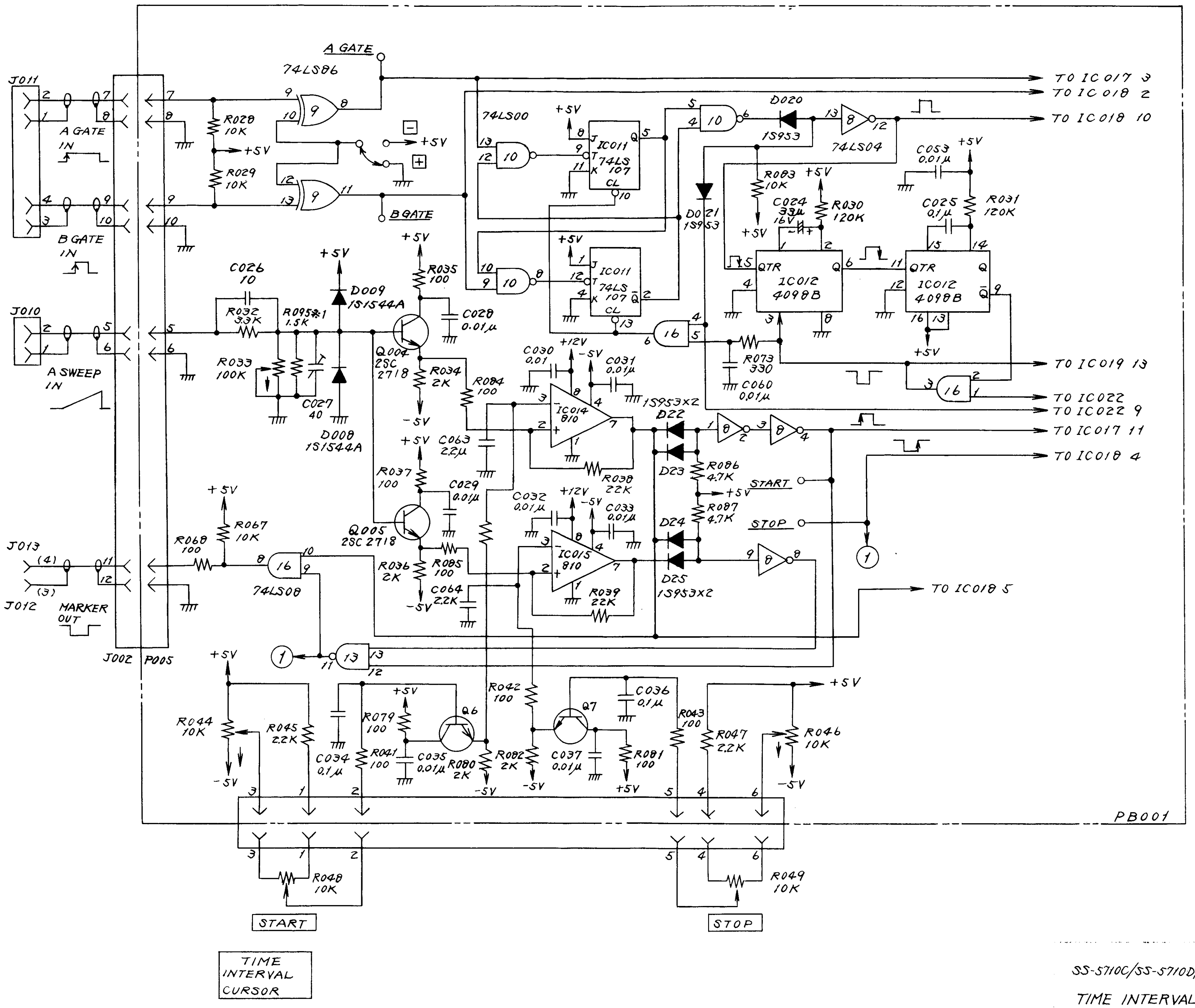

SS-5710C/SS-5710D/SS-5711C/SS-5711D

TIME INTERVAL CONTROL [2]

BBWSS31001107

※1 USED SS-5710C/SS-5710D ONLY.

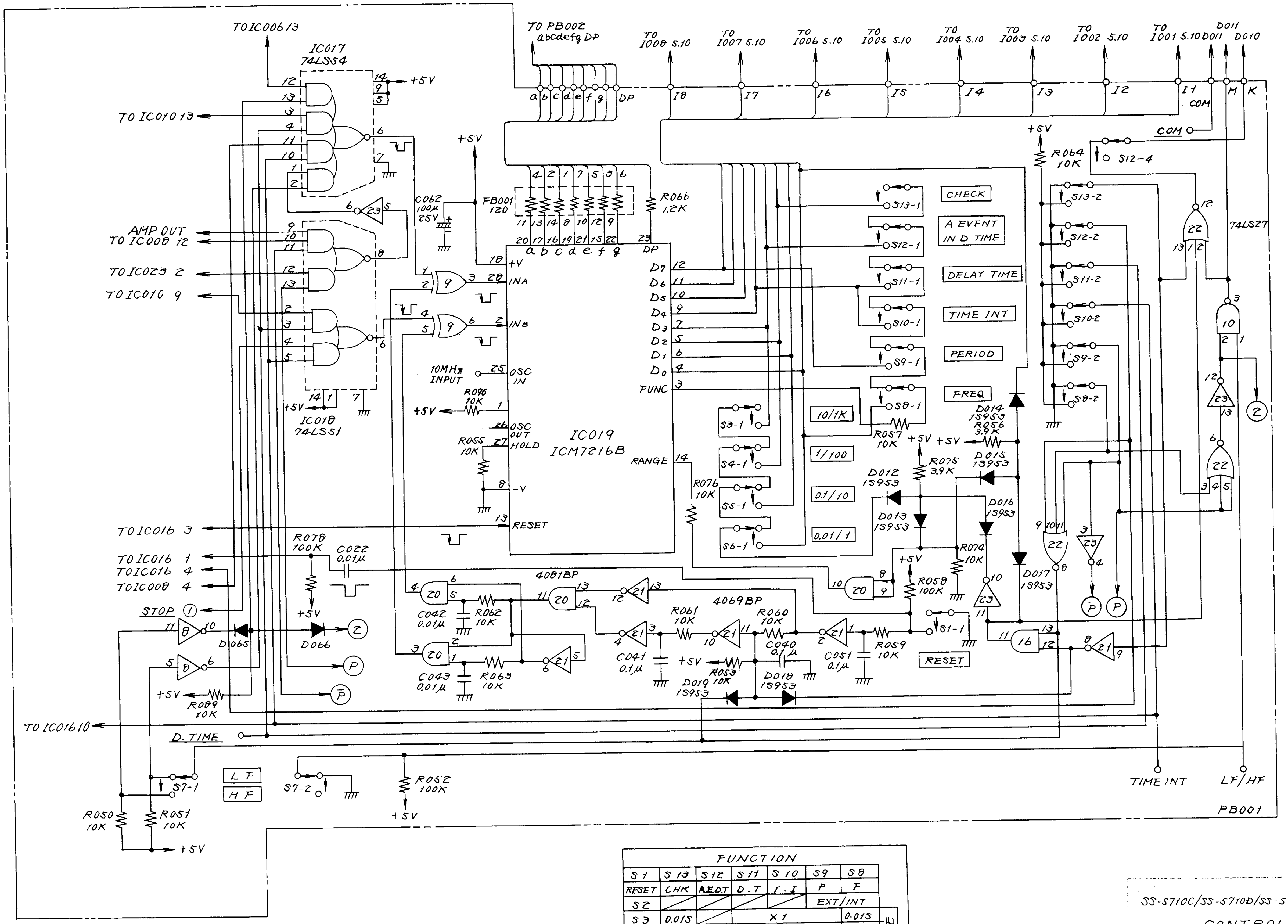

FUNCTION

S1	S13	S12	S11	S10	S9	S8	
RESET	CHK	A.E.D.T	D.T	T.I	P	F	
S2					EXT/INT		
S3	0.01S		×1			0.01S	RANGE
S4	0.1S		×10			0.1S	
S5	1 S		×100			1 S	
S6	10S		×1K			10 S	
S7						HF/LF	

SS-5710C/SS-5710D/SS-5711C/SS-5711D

CONTROL 3

BBWSS31001108 3

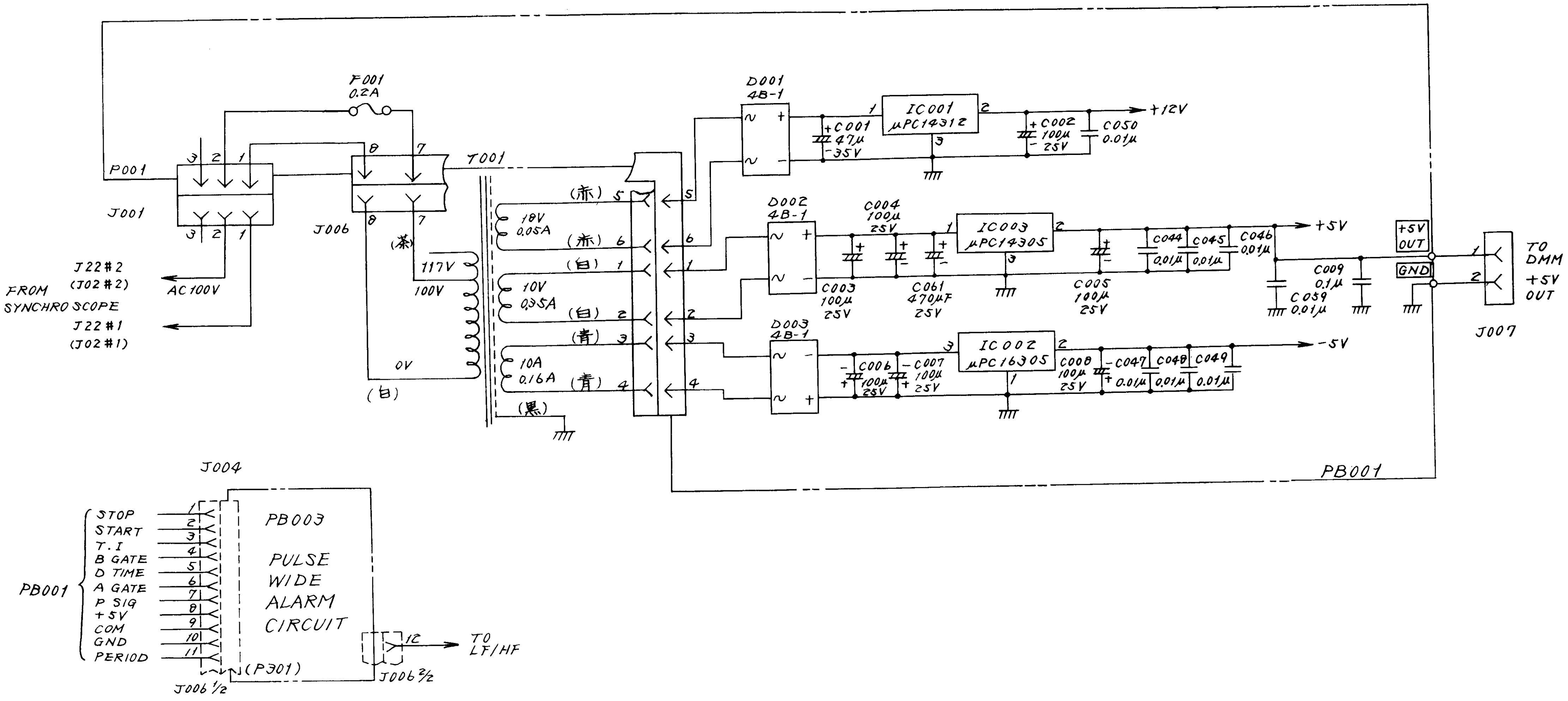

名称
SS-5710C/SS-5710D/SS-5711C/SS-5711D
POWER SUPPLY 4

図番
BBWSS31001109 1

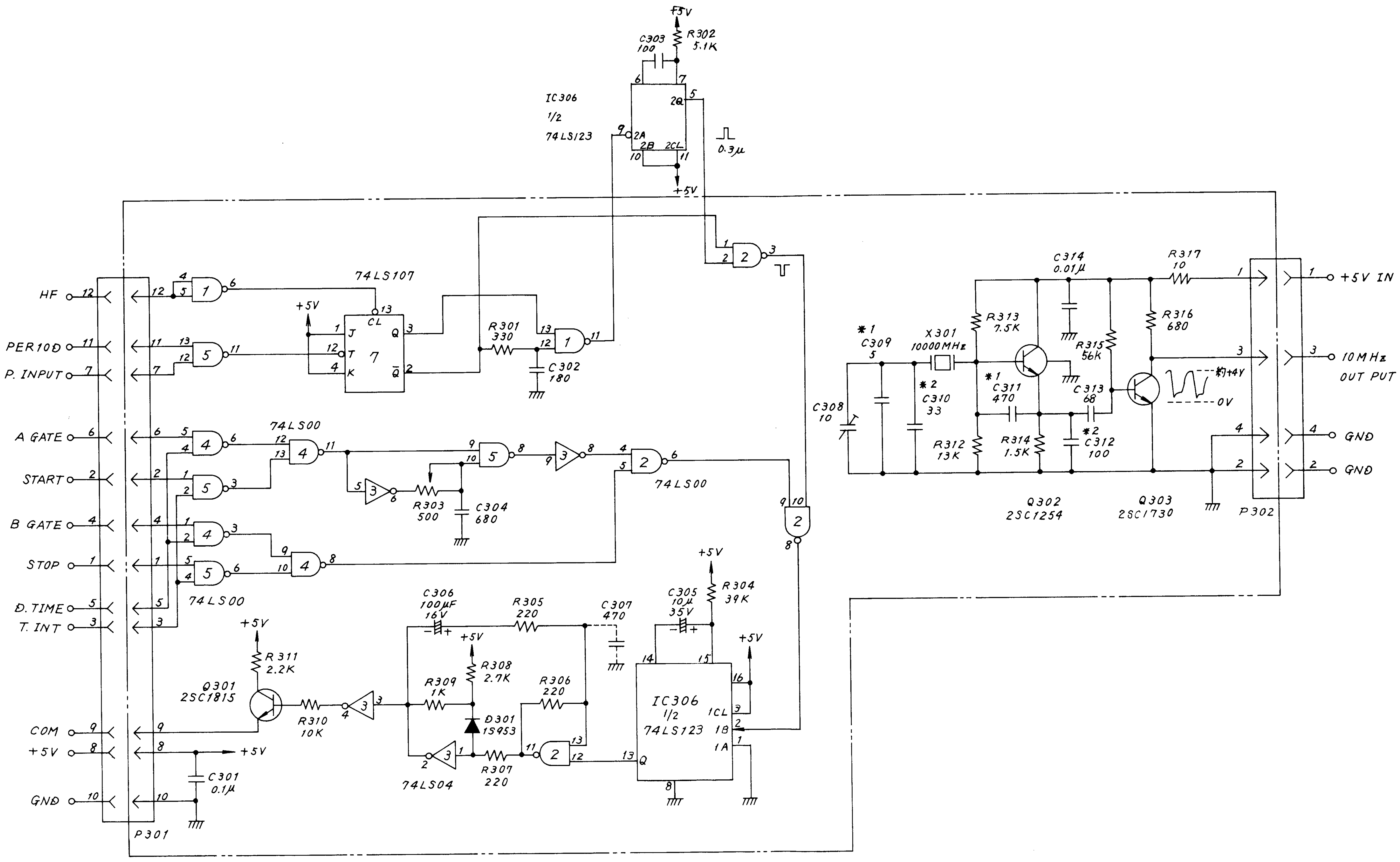

名 称
Title SS-5710C/SS-5710D/SS-5711C/SS-5711D

UNIVERSAL COUNTER ALARM 5

図 番
Drwg. No
BBWSS42004110

3

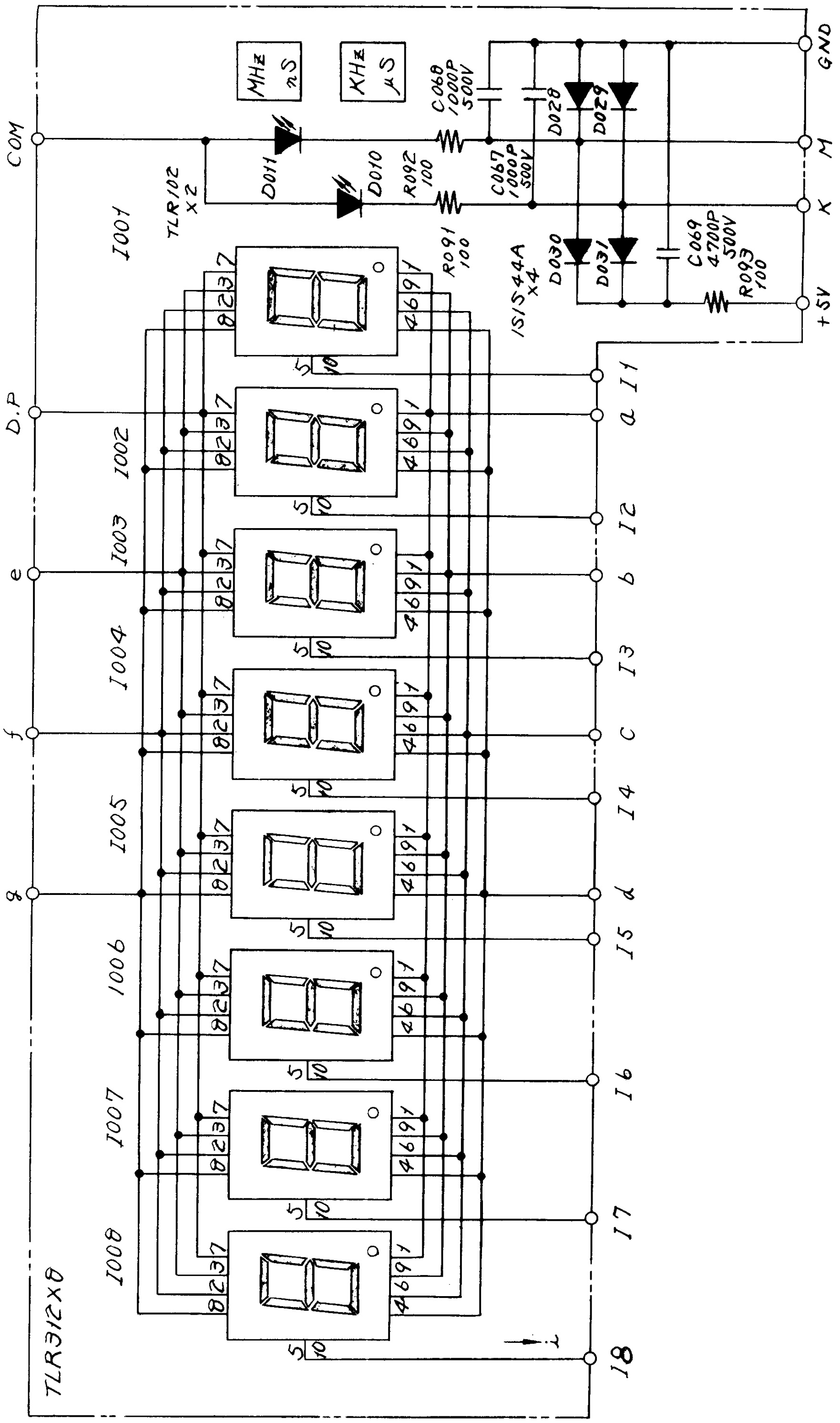

名称

SS-5710C/SS-5710D/SS-5711C/SS-5711D

UNIVERSAL COUNTER DISPLAY A 6

図番

BBWSS4101Z111 1

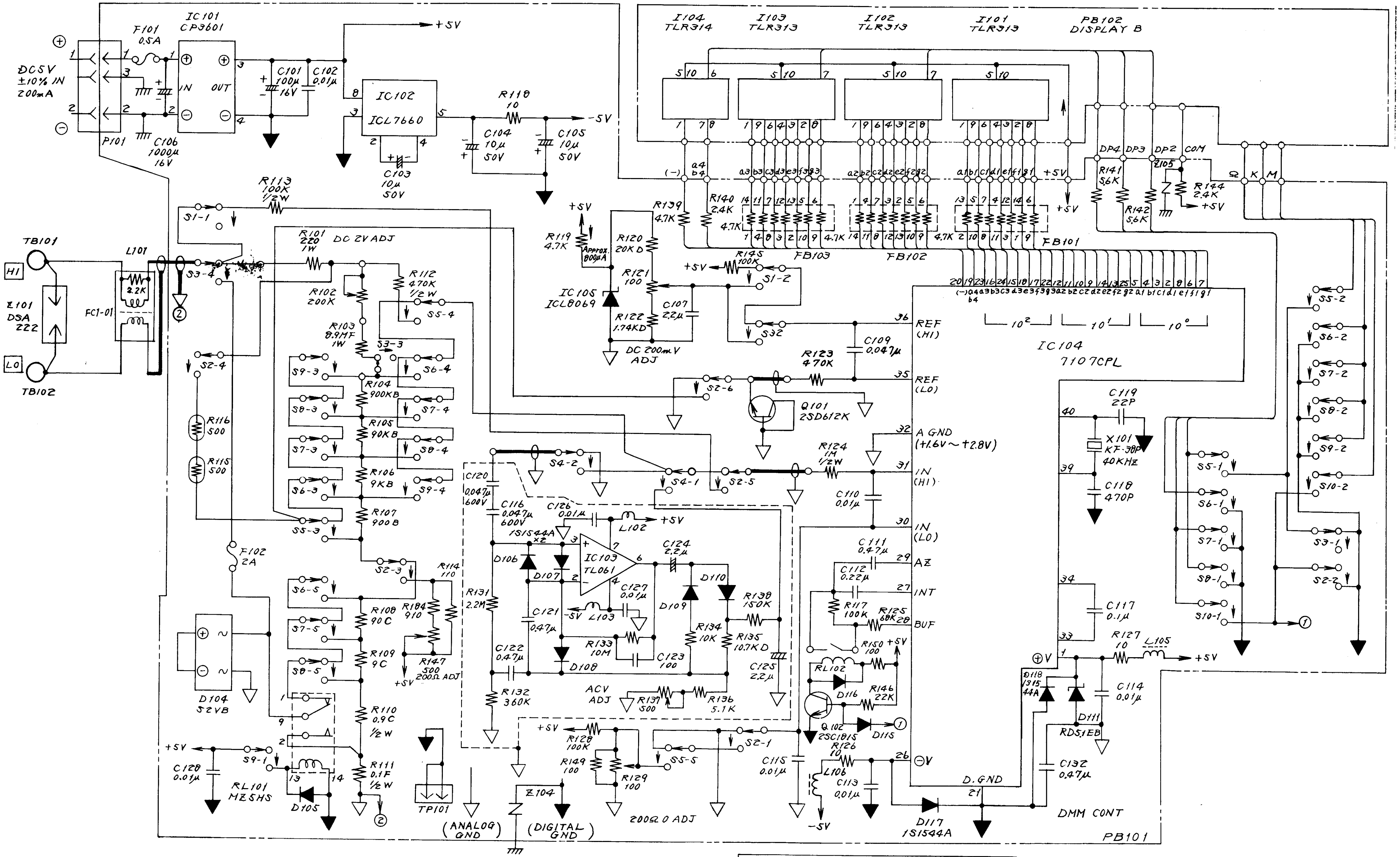

- D105, 108, 109, 110, 115, 116 are used of 1S953
- All resistance in ohms 1/4 and all capacitance in picofarads unless otherwise notes.
- : Wiring by shielded-wire
- ▽ : ANALOG GND
- ▼ : DIGITAL GND

	FUNCTION			
	S 4	S 3	S 2	S 1
	AC/DC	A		V
			Ω	
RANGE	S 5		200 Ω	200mV
	S 6	2mA	2KΩ	2V
	S 7	20mA	20KΩ	20V
	S 8	200mA	200KΩ	200V
	S 9	2000mA	2000KΩ	1000 AC750 V
	S 10		20MΩ	

SS-5710D/ SS-5711D

DIGITAL MULTIMETER UNIT 1

BBWSS22002106 3

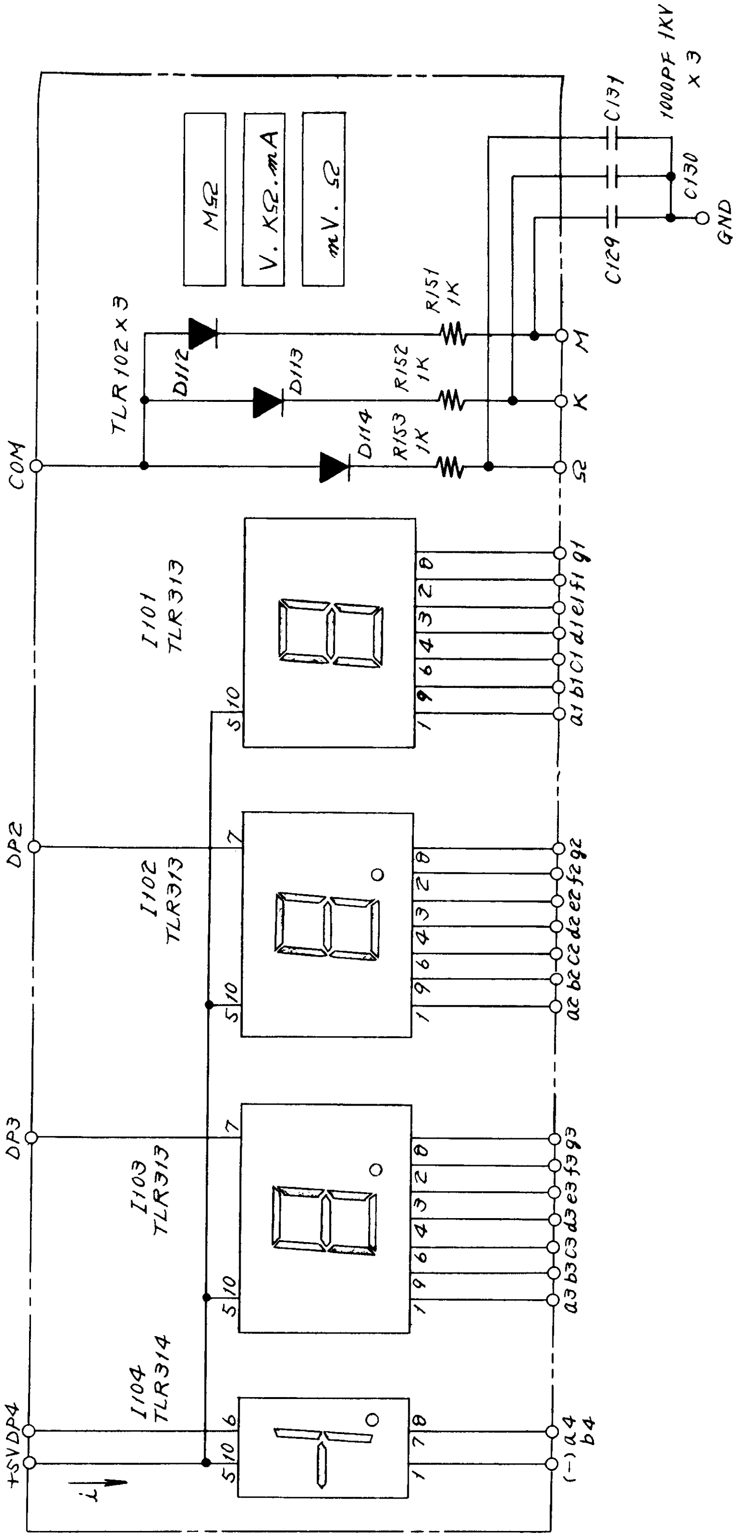

SS-5710D/SS-5711D

DIGITAL MULTIMETER DISPLAY B $\boxed{2}$

BBWSS41013106

1

Section 8

Electrical Parts List

Ordering Information

Replacement parts may be ordered through an IWATSU representative of directly from the factory. To be certain of receiving the proper parts, a ways include the following information with the order:

a. Model Number and serial number of the instrument on which the parts will be installed.
b. Circuit reference number and subassembly name, if applicable for which the part is inteded. If the part does not have a circuit reference, the description from the parts list should be used.
c. Iwatsu part number.

For factory repair, contact the IWATSU agent and include the following information:

a. Model number and serial number of the instrument on which the work is to be performed.
b. Details concerning the nature of the malfunction, or, type of repair desired.
Shipping instructions will be sent to you promptly.

How to Use This Parts List

The part list is divided into subsections corresponding to the schematic diagrams such as CH 1, & CH 2 ATTENUATOR, CH 1, CH 2 PRE-AMPLIFIER, CH 3 & CH 4 ATTENUATOR & PRE-AMPLIFIER, VERTICAL MAIN AMPLIFIER, VERTICAL CONTROL, A & B TRIGGER GENERATOR, A. B SWEEP GENERATOR, A & B TIMING CIRCUIT, HORIZONTAL AMPLIFIER, HORIZONTAL CONTROL, POWER SUPPLY & CALIBRATOR, Z AXIS & CRT CIRCUIT.

Component locations can be determined from the schematic diagrams, each component appears only once in the parts list. At the beginning of each subsection are listed part number for any complete subassemblies in that category that are available replacement parts. These subassemblies may include individually-listed components; care should be taken to pinpoint malfunctions to the exact replacement parts actually needed and thus avoid the time and cost involved in "over-repair".

Abbreviations

Cap.	Capacitor
Cer	Ceramic
Poly	Polyethytel film
Elect.	Aluminum electrolytic chemical
Elect. tan	Tan-talum electrolytic chemical condenser
[The symbol F (farad) is omitted]	
Res.	Resistor
W.W	Wire wound
Comp	Composition
[The symbol Ω (ohm) is omitted]	
FET	Field Effect Transistor
Diode	
T. diode	Tunnel diode
Z.diode	Zenner diode
S.B.diode	Schottky barrier diode
V.C. diode	Variable capacitance diode
L.E.D	Light emission diode
IC.	Integrated Circuit
Var.	Variable

CH1 & CH2 ATTENUATOR

CIRCUIT REFERENCE	DESCRIPTION	IWATSU PART NO.
1C01	Cap., 0.047 μ, ±20%, 200V, Poly.	DCF160291
1C02	Cap., 1000p, ±10%, 500V, Cer.	DCC151811
1C03	Cap., 22 μ, ± 20%, 25V, Elect.	DCE229041
1C04	Cap., 2.5 ~22.5p, Var., 250V, Cer.	DCV019592
1C05	Same as 1C04	
1C06	Cap., 2 ~8p, Var., 250V, Cer.	DCV019612
1C07	Same as 1C04	
1C08	Same as 1C04	
1C09	Cap., 2 ~12p, Var., 250V, Cer.	DCV019602
1C10	Cap., 68p, ±5%, 50V, Cer.	DCC233601
1C11	Cap., 5p, ±0.25p, 500V, Cer.	DCC250901
1C12	Same as 1C04	
1C13	Same as 1C06	
1C14	Cap., 470p, ± 5%, 50V, Cer.	DCC237481
1C15	Cap., 1p, ±0.25p, 50V, Cer.	DCC230301
1C16	Same as 1C04	
1C17	Same as 1C06	
1C18	Cap., 390p, ±5%, 50V, Cer.	DCC235101
1C19	Cap., 2700p, ±5%, 50V, Cer.	DCC237491
1C20	Same as 1C09	
1C21	Same as 1C01	
1C22	Same as 1C02	
1C23	Same as 1C03	
1C24	Cap., 2.5p,~22.5p, Var., 250V, Cer.	DCV019592
1C25	Same as 1C24	
1C26	Same as 1C06	
1C27	Same as 1C24	
1C28	Same as 1C24	
1C29	Same as 1C09	
1C30	Same as 1C10	
1C31	Same as 1C11	
1C32	Same as 1C24	
1C33	Same as 1C06	
1C34	Same as 1C14	
1C35	Same as 1C15	
1C36	Same as 1C24	
1C37	Same as 1C06	
1C38	Same as 1C38	
1C39	Same as 1C19	

CIRCUIT REFERENCE	DESCRIPTION	IWATSU PART NO.
1C40	Same as 1C09	
1C41	Same as 1C03	
1C42	Same as 1C03	
1C61	Cap., 100p, ±5%, 50V, Cer.	DCC239051
1C62	Same as 1C61	
1C63	Cap., 33p, ± 10%, 500V, Cer.	DCC252801
1C64	Same as 1C63	
1C98	Cap., 0.01 μ, ±10%, 50V, Cer.	DCC133571
1C99	Same as 1C98	
1R01	Res., 10, ± 5%, ¼W, Carbon	DRD134351
1R02	Same as 1R01	
1R03	Same as 1R01	
1R05	Same as 1R01	
1R06	Same as 1R01	
1R07	Res., 470,± 5%, ¼W, Carbon	DRD135471
1R08	Res., 330, ± 5%, ¼W, Carbon	DRD139351
1R09	Res., 100, ±1%, ¼W, Metal	DRE939561
1R10	Same as 1R09	
1R11	Res., 3.3k,± 5%, ¼W, Carbon	DRD139501
1R12	Res., 500k, ± 0.5%, ¼W, Metal	DRE139701
1R13	Res., 1M, ± 0.5%, ¼W, Metal	DRE139741
1R14	Res., 750k, ±0.5%, ¼W, Metal	DRE139911
1R15	Res., 333k, ±0.5%, ¼W, Metal	DRE139881
1R16	Res., 900k, ± 0.5%, ¼W, Metal	DRE139721
1R17	Res., 111k, ± 0.5%, ¼W, Metal	DRE233941
1R18	Res., 990k,± 0.5%, ¼W, Metal	DRE139731
1R19	Res., 10.1k, ±0.5%, ¼W, Metal	DRE233611
1R20	Res., 360, ±5%, ¼W, Carbon	DRD237721
1R21	Res., 18,± 5%, ¼W, Carbon	DRD237411
1R22	Res., 91, ±5%, ¼W, Carbon	DRD237821
1R23	Res., 999k,± 0.5%, ¼W, Metal	DRE139891
1R24	Res., 1.001k, ± 0.5%, ¼W, Metal	DRE233241
1R25	Res., 160, ± 5%, ¼W, Carbon	DRD237641
1R26	Res., 5.6,± 5%, ¼W, Carbon	DRD237291
1R27	Same as 1R13	
1R28	Res., 91, ± 5%, ¼W, Carbon	DRD134581
1R29	Res., 45, ±5%, ¼W, Carbon	DRD134501
1R30	Res., 13,± 5%, ¼W, Carbon	DRD134381
1R31	Same as 1R01	
1R32	Same as 1R01	
1R33	Same as 1R01	

CIRCUIT REFERENCE	DESCRIPTION	IWATSU PART NO.
1R35	Same as 1R01	
1R36	Same as 1R01	
1R37	Same as 1R07	
1R38	Same as 1R08	
1R39	Same as 1R09	
1R40	Same as 1R09	
1R41	Same as 1R11	
1R42	Same as 1R12	
1R43	Same as 1R13	
1R44	Same as 1R14	
1R45	Same as 1R15	
1R46	Same as 1R16	
1R47	Same as 1R17	
1R48	Same as 1R18	
1R49	Same as 1R19	
1R50	Same as 1R20	
1R51	Same as 1R21	
1R52	Same as 1R22	
1R53	Same as 1R23	
1R54	Same as 1R24	
1R55	Same as 1R25	
1R56	Same as 1R26	
1R57	Same as 1R13	
1R58	Same as 1R28	
1R59	Same as 1R29	
1R60	Same as 1R30	
1R61	Res., 47, ± 5%, ¼W, Carbon	DRD139261
1R62	Same as 1R61	
1R67	Same as 1R30	
1D01	Diode, 1S1544A	DDD010341
1D02	Same as 1D01	
1D03	Diode, 1S953	DDD010821
1D04	Same as 1D03	
1Q01	Transistor, μ PA61M	DTR295281
1Q02	Transistor, 2SC1834	DTR131031
1Q03	Same as 1Q01	
1Q04	Same as 1Q02	
1S01	Push switch, SUJ20A	DSW014851
1S02	Rotaly switch, PS22BH4-5-11	DSW034651
1S03	Same as 1S01	
1S04	Same as 1S02	
1J01	Connector, BNC080	DCN040711
1J02	Same as 1J01	

CH1 PRE-AMPLIFIER

CIRCUIT REFERENCE	DESCRIPTION	IWATSU PART NO.
2C01	Cap., 1000p, ±10%, 50V, Poly.	DCF129071
2C02	Cap., 6p, ± 0.5%, 50V, Cer.	DCC239091
2C03	Cap., 390p, ±5%, 50V, Cer.	DCC235101
2C04	Same as 2C01	
2C05	Same as 2C01	
2C06	Cap., 0.01 μ, +80% ~−20%, 50V, Cer.	DCC139501
2C08	Same as 2C01	
2C09	Same as 2C01	
2C10	Cap., 2 ~12p, Var., 250V, Cer.	DCV019602
2C11	Cap., 2.5~ 22.5p, Var., 250V, Cer.	DCV019592
2C12	Same as 2C06	
2C13	Cap., 0.01μ , ±10%, 50V, Cer.	DCC133571
2C15	Cap., 100p, ± 5%, 50V, Cer.	DCC239051
2C16	Same as 2C06	
2C17	Same as 2C06	
2C18	Same as 2C06	
2C19	Same as 2C06	
2C22	Same as 2C06	
2C23	Cap., 22 μ, +150%~ −10%, 25V, Elect.	DCE225151
2C24	Same as 2C06	
2C25	Cap., 22μ , ±20%, 25V, Elect.	DCE229041
2C29	Same as 2C06	
2C98	Same as 2C01	
2C99	Same as 2C01	
2C99	Same as 2C01	
2C99A	Cap., 10p, ±0.5%, 50V, Cer.	DCC231701
2L01	Coil, OP-03-03-1H	DCL320251
2R01	Res., 22k, Var., 0.5W, Cermet	DRV430701
2R02	Res., 22k, ±1%, ¼W, Metal	DRE939061
2R03	Res., 220, ±1%, ¼W, Metal	DRE939601
2R04	Res., 3.9k, ±5%, ¼W, Carbon	DRD139501
2R05	Res., 100, ±15%, Thermistor	DDD080201
2R06	Res., 100, Var., 0.5W, Cermet	DRV430541
2R07	Res., 150, ±1%, ¼W, Metal	DRE939581
2R08	Res., 100, ±5%, ¼W, Carbon	DRD139291

CIRCUIT REFERENCE	DESCRIPTION	IWATSU PART NO.
2R09	Same as 2R08	
2R10	Res., 3.3k, ±5%, ¼W, Carbon	DRD139471
2R11	Same as 2R10	
2R12	Res., 330, ±5%, ¼W, Carbon	DRD139351
2R13	Same as 2R12	
2R14	Res., 1.2k, ± 5%, ¼W, Carbon	DRD139421
2R15	Same as 2R14	
2R16	Res., 22, ±5%, ¼W, Carbon	DRD139231
2R17	Res., 1k, Var., 0.1W, Carbon	DRV147281
2R18	Same as 2R16	
2R19	Res., 47, ±1%, ¼W, Metal	DRE939511
2R20	Res., 4.7k, ±5%, ¼W, Carbon	DRD139151
2R21	Res., 470, ±5%, ¼W, Carbon	DRD139371
2R22	Same as 2R20	
2R23	Res., 22, ±1%, ¼W, Metal	DRE130431
2R24	Same as 2R14	
2R25	Same as 2R07	
2R26	Same as 2R21	
2R27	Same as 2R07	
2R28	Same as 2R14	
2R29	Same as 2R03	
2R30	Res., 470, Var., 0.5W, Cermet	DRV430561
2R31	Res., 390, ±5%, ¼W, Carbon	DRD134731
2R32	Same as 2R31	
2R33	Res., 220, ±5%, ¼W, Carbon	DRD139321
2R34	Same as 2R33	
2R35	Same as 2R20	
2R36	Res., 2k, Var., 0.2W, Carbon	DRV146871
2R37	Same as 2R33	
2R38	Same as 2R20	
2R39	Res., 4.7k, ± 5%, ¼W, Carbon	DRD139521
2R40	Res., 1k, ± 5%, ¼W, Carbon	DRD139141
2R41	Same as 2R39	
2R42	Res., 7.5k, ±5%, ¼W, Carbon	DRD139571
2R43	Same as 2R10	
2R44	Res., 47, ±5%, ¼W, Carbon	DRD139261
2R45	Same as 2R44	
2R46	Same as 2R40	
2R47	Same as 2R33	
2R48	Same as 2R40	
2R49	Res., 33, ±1%, ¼W, Metal	DRE939491
2R50	Same as 2R40	

CIRCUIT REFERENCE	DESCRIPTION	IWATSU PART NO.
2R51	Same as 2R40	
2R52	Res., 1k, ±1%, ¼W, Metal	DRE939071
2R53	Res., 2.4k, ± 5%, ¼W, Carbon	DRD139461
2R54	Res., 1k, Var., 0.5W, Cermet	DRV430571
2R55	Same as 2R33	
2R56	Same as 2R53	
2R57	Res., 22, ± 5%, ¼W, Carbon	DRD237431
2R61	Res., 10, ± 5%, ¼W, Carbon	DRD139211
2R62	Same as 2R61	
2R63	Same as 2R61	
2R64	Same as 2R61	
2R65	Res., 7.5k, ± 1%, ¼W, Metal	DRE535701
2R67	Res., 1k, ±5%, ¼W, Carbon	DRD139141
2R98	Res., 33, ± 5%, ¼W, Carbon	DRD134471
2R99	Same as 2R98	
2D01	LED., TLR206	DDD070181
2D02	Diode, 1S953	DDD010821

CIRCUIT REFERENCE	DESCRIPTION	IWATSU PART NO.
2Q01	Transistor, 2SC1834	DTR131031
2Q02	Transistor, 2SC2037	DTR137591
2Q03	Same as 2Q02	
2Q04	Transistor, 2SA1206	DTR115301
2Q05	Same as 2Q04	
2Q06	Same as 2Q02	
2Q07	Same as 2Q02	
2Q08	Same as 2Q01	
2Q09	Same as 2Q01	
2Q10	Same as 2Q04	
2Q11	Same as 2Q04	
2Q12	Same as 2Q02	
2Q13	Same as 2Q02	
2Q14	Transistor, 2SC1907	DTR137611
2Q15	Same as 2Q14	
2J01	Connector, M36-M87-02	DCN034601
2J02	Same as 2J01	
2J03	Connector, M36-M87-04	DCN034621
2P01	Connector, M36-02-30-114P	DCN034851
2P02	Same as 2P01	
2P03	Connector, M36-04-30-114P	DCN034871

CH2 PRE-AMPLIFIER

CIRCUIT REFERENCE	DESCRIPTION	IWATSU PART NO.
3C01	Cap., 1000p, ±10%, 50V, Poly	DCF129071
3C02	Cap., 6p, ±0.5p, 50V, Cer.	DCC239091
3C03	Cap., 390p, ±5%, 50V, Cer.	DCC235101
3C04	Same as 3C01	
3C05	Same as 3C01	
3C06	Cap., 0.01μ, +80%~ −20%, 50V, Cer.	DCC139501
3C08	Same as 3C01	
3C09	Same as 3C01	
3C10	Cap., 2~12p, Var., 250V, Cer.	DCV019602
3C11	Cap., 2.5 ~22.5p, Var., 250V, Cer.	DCV019592
3C12	Same as 3C06	
3C13	Cap., 0.01μ, ±10%, 50V, Cer.	DCC133571
3C15	Cap., 100p, ± 5%, 50V, Cer.	DCC239051
3C16	Same as 3C06	
3C17	Same as 3C06	
3C18	Same as 3C06	
3C19	Same as 3C06	
3C22	Same as 3C06	
3C23	Cap., 22μ, ± 20%, 25V, Elect.	DCE229041
3C24	Same as 3C06	
3C25	Cap., 22μ, 150% ~−10%, 25V, Elect.	DCE225151
3C29	Same as 3C06	
3C31	Cap., 0.01μ, ±10%, 50V, Cer.	DCC133571
3C98	Same as 3C01	
3C99	Same as 3C01	
3C99A	Cap., 10p, ±0.5p, 50V, Cer.	DCC231701
3L01	Coil, OP-03-03-1H	DCL320251
3L02	Same as 3L01	
2R01	Res., 22k, Var., 0.5W, Cermet	DRV430701
3R02	Res., 22k, ±1%, ¼W, Metal	DRE939061
3R03	Res., 220, ±1%, ¼W, Metal	DRE939601
3R04	Res., 3.3k, ±5%, ¼W, Carbon	DRD139501
3R05	Res., 200, ±15%, Thermistor	DDD080201
3R06	Res., 100, Var., 0.5W, Cermet	DRV430541
3R07	Res., 150, ±1%, ¼W, Metal	DRE939581

CIRCUIT REFERENCE	DESCRIPTION	IWATSU PART NO.
3R08	Res., 100, ±5%, ¼W, Carbon	DRD139291
3R09	Same as 3R08	
3R10	Res., 2.4k, ± 5%, ¼W, Carbon	DRD139471
3R11	Same as 3R10	
3R12	Res., 330, ± 5%, ¼W, Carbon	DRD139351
3R13	Same as 3R12	
3R14	Res., 1.2k, ± 5%, ¼W, Carbon	DRD139421
3R15	Same as 3R14	
3R16	Res., 22, ± 5%, ¼W, Carbon	DRD139231
3R17	Res., 1k, Var., 0.1W, Carbon	DRV147281
3R18	Same as 3R16	
3R19	Res., 47, ± 1%, ¼W, Metal	DRE939511
3R20	Res., 4.7k, ± 5%, ¼W, Carbon	DRD139151
3R21	Res., 470, ± 5%, ¼W, Carbon	DRD139371
3R22	Same as 3R06	
3R23	Res., 22, ± 1%, ¼W, Metal	DRE939511
3R24	Same as 3R14	
3R25	Same as 3R07	
3R26	Same as 3R21	
3R27	Same as 3R07	
3R28	Same as 3R14	
3R29	Same as 3R03	
3R30	Res., 470, Var., 0.5W, Cermet	DRV430561
3R31	Same as 3R12	
3R32	Res., 390,± 5%, ¼W, Carbon	DRD134731
3R33	Res., 220, ± 5%, ¼W, Carbon	DRD139321
3R34	Same as 3R33	
3R35	Same as 3R20	
3R36	Res., 2k, Var., 0.2W, Carbon	DRV146871
3R37	Same as 3R33	
3R38	Same as 3R20	
3R39	Res., 3.9k, ± 5%, ¼W, Carbon	DRD139521
3R40	Same as 3R04	
3R41	Same as 3R39	
3R42	Res., 7.5k, ± 5%, ¼W, Carbon	DRD139571
3R43	Same as 3R10	
3R44	Res., 47, ± 5%, ¼W, Carbon	DRD139061
3R45	Same as 3R44	
3R46	Res., 1k, ± 5%, ¼W, Carbon	DRD139141
3R47	Same as 3R33	
3R48	Same as 3R46	
3R49	Res., 33k, ± 1%, ¼W, Metal	DRE939491

CIRCUIT REFERENCE	DESCRIPTION	IWATSU PART NO.
3R50	Same as 3R46	
3R51	Same as 3R46	
3R52	Same as 3R46	
3R53	Res., 2.2k,± 5%, ¼W, Carbon	DRD139461
3R54	Res., 1k, Var., 0.5W, Cermet	DRV430571
3R55	Same as 3R33	
3R56	Same as 3R53	
3R57	Same as 3R16	
3R61	Res., 10, ± 5%, ¼W, Carbon	DRD139211
3R62	Same as 3R61	
3R63	Same as 3R61	
3R63A	Same as 3R46	
3R64	Same as 3R61	
3R65	Res., 1.5k, ± 5%, ¼W, Carbon	DRD139431
3R66	Same as 3R65	
3R72	Res., 3.9k, ± 5%, ¼W, Carbon	DRD139521
3R73	Same as 3R04	
3R98	Res., 10,± 5%, ¼W, Carbon	DRD134351
3R99	Same as 3R98	
3D01	LED., TLR206	DDD070181
3D02	Diode, 1S953	DDD010821

CIRCUIT REFERENCE	DESCRIPTION	IWATSU PART NO.
3Q01	Transistor, 2SC1834	DTR131031
3Q02	Transistor, 2SC2037	DTR137591
3Q03	Same as 3Q02	
3Q04	Transistor, 2SA1206	DTR115301
3Q05	Same as 3Q04	
3Q06	Same as 3Q02	
3Q07	Same as 3Q02	
3Q08	Same as 3Q01	
3Q09	Same as 3Q01	
3Q10	Same as 3Q04	
3Q11	Same as 3Q04	
3Q12	Transistor, 2SC2037	DTR137591
3Q13	Same as 3Q12	
3Q14	Transistor, 2SC1907	DTR137611
3Q15	Same as 3Q14	
3Q16	Same as 3Q01	
3Q17	Same as 3Q01	
3J01	Connector, M36-M87-02	DCN034601
3P01	Connector, M36-02-30-114P	DCN034851
3S02	Switch, SUJ12A	DSW014831

CH3 & CH4 ATTENUATOR & PRE-AMPLIFIER

CIRCUIT REFERENCE	DESCRIPTION	IWATSU PART NO.
4C01	Cap., 0.047μ, ±20%, 200V, Poly.	DCF160291
4C02	Cap., 2.5 ~22.5p, Var., 250V, Cer.	DCV019592
4C03	Cap., 2 ~8p, Var., 250V, Cer.	DCV019612
4C04	Cap., 8p, ±0.5p, 500V, Cer.	DCC251301
4C05	Cap., 39p, ± 5%, 500V, Cer.	DCC233001
4C06	Cap., 1000p, ±10%, 500V, Cer.	DCC151811
4C07	Cap., 22μ, ±20%, 25V, Elect.	DCE225151
4C10	Cap., 0.01μ, +80% ~ –20%, 50V, Cer.	DCC139501
4C12	Same as 4C10	
4C13	Same as 4C10	
4C14	Cap., 3.8~28.5p, Var., 250V, Cer.	DCV019742
4C15	Same as 4C01	
4C16	Same as 4C02	
4C17	Same as 4C03	
4C18	Same as 4C04	
4C19	Same as 4C05	
4C20	Same as 4C06	
4C21	Cap., 22μ, ±20%, 25V, Elect.	DCE229041
4C24	Same as 4C10	
4C26	Same as 4C10	
4C27	Same as 4C10	
4C28	Same as 4C14	
4C30	Same as 4C10	
4C31	Same as 4C10	
4C32	Same as 4C10	
4C33	Same as 4C10	
4C34	Same as 4C10	
4C35	Same as 4C10	
4C36	Same as 4C10	
4C37	Same as 4C10	
4C38	Same as 4C10	
4C39	Same as 4C10	
4C40	Same as 4C10	
4C41	Same as 4C10	
4C42	Same as 4C10	
4C96	Cap., 5p, ±0.25p, 50V, Cer.	DCC230901
4C97	Same as 4C96	

CIRCUIT REFERENCE	DESCRIPTION	IWATSU PART NO.
4R01	Res., 47, ±5%, ¼W, Carbon	DRD139261
4R02	Res., 900k, ±0.5%, ¼W, Metal	DRE139721
4R03	Res., 111k, ±0.5%, ¼W, Metal	DRE233941
4R04	Res., 470k, ± 5%, ¼W, Carbon	DRD139931
4R05	Res., 1M, ± 0.5%, ¼W, Metal	DRE139741
4R06	Res., 220, ±0.5%, ¼W, Carbon	DRD139321
4R07	Res., 100, ±1%, ¼W, Metal	DRE939561
4R08	Same as 4R07	
4R09	Res.,680, ± 1%, ¼W, Metal	DRE939631
4R10	Res., 1.5k, ± 5%, ¼W, Carbon	DRD139431
4R11	Res., 33, ± 5%, ¼W, Carbon	DRD139911
4R12	Same as 4R06	
4R13	Res., 1.2k, ±1%, ¼W, Metal	DRE939291
4R14	Same as 4R13	
4R15	Same as 4R09	
4R16	Res., 330, ±1%, ¼W, Metal	DRE939621
4R17	Res., 470, Var., 0.5W, Carbon	DRV430561
4R18	Res., 750, ±5%, ¼W, Carbon	DRD139401
4R19	Same as 4R18	
4R20	Res., 5.1k, ± 5%, ¼W, Carbon	DRD139531
4R21	Res., 2k, Var., 0.05% Carbon	DRV131431
4R22	Same as 4R20	
4R23	Res., 15, ±5%, ¼W, Carbon	DRD139221
4R24	Res., 470, ±1%, ¼W, Metal	DRE939121
4R25	Res., 220, ±1%, ¼W, Metal	DRE939601
4R26	Same as 4R06	
4R31	Same as 4R01	
4R32	Same as 4R02	
4R33	Same as 4R03	
4R34	Same as 4R04	
4R35	Same as 4R05	
4R36	Same as 4R06	
4R37	Same as 4R07	
4R38	Same as 4R07	
4R39	Same as 4R09	
4R40	Same as 4R10	
4R41	Same as 4R11	
4R42	Same as 4R06	
4R43	Same as 4R13	
4R44	Same as 4R13	
4R45	Same as 4R09	
4R46	Same as 4R16	

CIRCUIT REFERENCE	DESCRIPTION	IWATSU PART NO.
4R47	Same as 4R17	
4R48	Same as 4R18	
4R49	Same as 4R18	
4R50	Same as 4R20	
4R51	Same as 4R21	
4R52	Same as 4R20	
4R53	Same as 4R23	
4R54	Same as 4R24	
4R55	Same as 4R25	
4R56	Same as 4R06	
4R60	Res., 10, ±5%, ¼W, Carbon	DRD139211
4R61	Same as 4R60	
4R62	Same as 4R60	
4R63	Same as 4R60	
4R93	Res., 1k, ±5%, 1/8W, Carbon	DRD225041
4R94	Res., 33, ± 5%, ¼W, Carbon	DRD237471
4R95	Same as 4R94	
4R95	Same as 4R94	
4R96	Same as 4R94	
4R97	Same as 4R94	
4R98	Res., 220, ± 5%, ¼W, Carbon	DRD237671
4R99	Same as 4R98	
4D01	Diode, 1S1544A	DDD010341
4D02	Same as 4D01	
4Q01	Transistor, μPA61AM	DTR295281
4Q02	Transistor, 2SC1834	DTR131031
4Q03	Transistor, 2SC1907	DTR137611
4Q04	Same as 4Q03	
4Q05	Same as 4Q02	
4Q06	Transistor, 2SA1206	DTR115301
4Q07	Same as 4Q01	
4Q08	Same as 4Q02	
4Q09	Same as 4Q03	
4Q10	Same as 4Q03	
4Q11	Same as 4Q02	
4Q12	Same as 4Q06	

CIRCUIT REFERENCE	DESCRIPTION	IWATSU PART NO.
4J01	Connector, BNC080	DCN040711
4J02	Same as 4J01	
4J01	Connector, M36-M87-05	DCN034631
4J02	Same as 4J01	
4J03	Connector, M36-M87-02	DCN034601
4J04	Same as 4J03	
4J05	Connector, M36-M87-08	DCN034511
4J06	Connector, M36-M87-03	DCN034611
4J07	Same as 4J06	
4J08	Same as 4J06	
4J09	Same as 4J06	
4P01	Connector, M36-05-30-114P	DCN034881
4P02	Same as 4P01	
4P03	Connector, M36-02-30-114P	DCN034851
4P04	Same as 4P03	
4P05	Connector, M33-08-30-134P	DCN034801
4P06	Connector, M36-03-30-134P	DCN034911
4P07	Same as 4P06	
4P08	Connector, M36-03-30-114P	DCN034861
4P09	Same as 4P08	
4S01	Push switch, SUJ25A	DSW014861
4S02	Push switch, SUJ45A	DSW014901
4S03	Same as 4S01	
4S04	Same as 4S02	

CIRCUIT REFERENCE	DESCRIPTION	IWATSU PART NO.

VERTICAL MAIN AMPLIFIER

CIRCUIT REFERENCE	DESCRIPTION	IWATSU PART NO.
5C03	Cap., 10 µ, ±10%, 6.3V, Elect.	DCE910071
5C04	Cap., 0.01 µ, ±10%, 50V, Poly.	DCF129051
5C05	Cap., 68p, ±5%, 50V, Cer.	DCC233601
5C07	Cap., 0.01 µ, +80% ~ −20%, 50V, Cer.	DCC139501
5C11	Same as 5C07	
5C14	Cap., 5 ~40p, Var., 250V, Cer.	DCV019752
5C15	Cap., 2200p, ±10%, 50V, Poly.	DCF129061
5C16	Cap., 75p, ± 5%, 50V, Cer.	DCC233701
5C17	Cap., 56p, ±5%, 50V, Cer.	DCC239251
5C20	Cap., 22 µ, ±20%, 25V, Elect.	DCE225151
5C21	Cap., 2 ~12p, Var., 250V, Cer.	DCV019592
5C23	Same as 5C23	
5C24	Same as 5C23	
5C25	Same as 5C23	
5C30	Cap., 390p, ± 5%, 50V, Cer.	DCC235101
5C31	Cap., 2.2 µ, ±20%, 50V, Elect.	DCE249131
5C33	Same as 5C23	
5C35	Cap., 100p, ±5%, 50V, Cer.	DCC239051
5C36	Cap., 1000p, ±10%, 50V, Poly.	DCF129071
5C37	Same as 5C36	
5C38	Cap., 150p, ±5%, 50V, Cer.	DCC239021
5C39	Same as 5C38	
5C95	Same as 5C23	
5C98	Cap., 22p, ±5%, 50V, Cer.	DCC239121
5C99	Cap., 12p, ±5%, 50V, Cer.	DCC231901
5L01	Peaking coil	DCL151301
5L02	Same as 5L01	
5L03	Choking coil, 82007	DCL111331
5L04	Same as 5L03	
5DL01	Delay cable, CD-3A 80cm	KHB048111
5R01	Res., 510,±1%, ¼W, Metal	DRE535421
5R02	Same as 5R01	
5R03	Res., 270, ±1%, ¼W, Metal	DRE535351
5R04	Res., 240, ±1%, ¼W, Metal	DRE535341
5R05	Same as 5R03	
5R06	Same as 5R04	

CIRCUIT REFERENCE	DESCRIPTION	IWATSU PART NO.
5R08	Res., 100, ±5%, ¼W, Carbon	DRD139291
5R09	Res., 510, ±1%, ¼W, Metal	DRE939131
5R10	Same as 5R09	
5R11	Res., 20k, ± 5%, ¼W, Carbon	DRD238141
5R12	Res., 33k, ± 5%, ¼W, Carbon	DRD238191
5R13	Res., 27k, ± 5%, ¼W, Carbon	DRD238171
5R14	Res., 330, ± 5%, ¼W, Carbon	DRD139351
5R15	Same as 5R14	
5R16	Res., 100, ± 5%, ¼W, Carbon	DRD237591
5R17	Res., 1k, ± 5%, ¼W, Carbon	DRD237831
5R18	Same as 5R17	
5R19	Res., 47, ±5%, ¼W, Carbon	DRD237511
5R20	Same as 5R19	
5R21	Res., 33, ±5%, ¼W, Carbon	DRD139911
5R22	Same as 5R17	
5R23	Same as 5R17	
5R24	Same as 5R14	
5R25	Res., 1k, ±5%, ¼W, Carbon	DRD237831
5R26	Res., 1k, Var., 0.5W, Cermet	DRV430751
5R27	Res., 220, ±5%, ¼W, Carbon	DRD237671
5R28	Res., 3.3k, ± 5%, ¼W, Carbon	DRD237951
5R29	Res., 220, ±5%, ¼W, Carbon	DRD139321
5R30	Res., 10, ±5%, ¼W, Carbon	DRD237351
5R31	Res., 10, ± 5%, ¼W, Carbon	DRD139211
5R32	Res., 220, ± 5%, ¼W, Carbon	DRD237671
5R33	Res., 2.2k, ±5%, ¼W, Carbon	DRD139461
5R34	Res., 3.9k, ±5%, ¼W, Carbon	DRD139521
5R35	Same as 5R34	
5R36	Res., 1k, ± 5%, ¼W, Carbon	DRD139141
5R37	Same as 5R36	
5R41	Res., 100, ±1%, ¼W, Metal	DRE939561
5R42	Same as 5R41	
5R43	Res., 470, ±5%, ¼W, Carbon	DRD139371
5R44	Res., 82, ±1%, ¼W, Metal	DRE939541
5R45	Res., 560, ± 5%, ¼W, Carbon	DRD139121
5R46	Res., 220, Var., 0.5W, Cermet	DRV430551
5R47	Res., 47, ±5%, ¼W, Carbon	DRD139261
5R48	Res., 180, ±1%, ¼W, Metal	DRE939011
5R49	Same as 5R48	
5R50	Same as 5R47	
5R51	Res., 75, ±1%, ¼W, Metal	DRE130561
5R52	Res., 1.2k, ±5%, ¼W, Carbon	DRD139421

CIRCUIT REFERENCE	DESCRIPTION	IWATSU PART NO.
5R53	Same as 5R52	
5R54	Res., 22k, Var., 0.5W, Cermet	DRV430701
5R55	Res., 8.2k, ±5%, ¼W, Carbon	DRD139581
5R56	Res., 5.1k, ±5%, ¼W, Carbon	DRD139531
5R57	Res., 1.5k, ±5%, ¼W, Carbon	DRD139431
5R60	Res., 68k, ±5%, ¼W, Carbon	DRD139841
5R61	Res., 220, ±1%, ¼W, Metal	DRE939601
5R62	Same as 5R61	
5R63	Res., 51, ±1%, ¼W, Metal	DRE130521
5R64	Res., 430, ± 5%, 1W, Metal	DRS220851
5R65	Same as 5R64	
5R66	Res., 33, ± 5%, ¼W, Carbon	DRD139911
5R67	Same as 5R14	
5R68	Same as 5R14	
5R69	Res., 240, ± 5%, 2W, Metal	DRS230831
5R70	Sameas 5R69	
5R71	Same as 5R69	
5R72	Same as 5R69	
5R75	Same as 5R52	
5R76	Res., 5k, ±15%, Thermistor	DDD080191
5R77	Res., 10k, ± 5%, ¼W, Carbon	DRD139161
5R78	Same as 5R77	
5R79	Same as 5R77	
5R80	Res., 150, ± 5%, ¼W, Carbon	DRD139101
5R81	Same as 5R80	
5R82	Res., 100, Var., 0.5W, Cermet	DRV430541
5R83	Same as 5R08	
5R99	Res., 430, ± 5%, ¼W, Carbon	DRD237741
5D01	Diode, 1S953	DDD010821
5D02	Same as 5D01	
5D03	Same as 5D01	
5D04	Same as 5D01	
5D05	Same as 5D01	
5D06	Same as 5D01	
5D07	Same as 5D01	
5D08	Same as 5D01	
5D09	Same as 5D01	
5D10	Same as 5D01	
5D11	Same as 5D01	
5D12	Same as 5D01	
5D13	Same as 5D01	

CIRCUIT REFERENCE	DESCRIPTION	IWATSU PART NO.
5D14	Same as 5D01	
5D15	Same as 5D01	
5D16	Same as 5D01	
5D18	Same as 5D01	
5D19	Same as 5D01	
5D20	Same as 5D01	
5D21	Same as 5D01	
5D22	Same as 5D01	
5D23	Diode, S3162	DDD011001
5D24	Same as 5D01	
5D25	Same as 5D23	
5Q01	Transistor, 2S2037	DTR137591
5Q02	Same as 5Q01	
5Q03	Transistor, 2SC1834	DTR131031
5Q04	Same as 5Q03	
5Q05	Transistor, 2SA1206	DTR115301
5Q06	Same as 5Q05	
5Q07	Transistor, 2N3905	DTR150011
5Q08	Same as 5Q05	
5Q09	Same as 5Q05	
5Q10	Same as 5Q01	
5Q11	Same as 5Q01	
5Q12	Transistor, 2SC1387	DTR137701
5Q13	Same as 5Q12	
5Q14	Transistor, 2SC1412	DTR130901
5Q15	Same as 5Q14	
5Q16	Transistor, 2SC1815GR	DTR139011
5Q17	Same as 5Q16	
5Q18	Same as 5Q16	
5Q19	Same as 5Q16	
5Q20	Same as 5Q16	
5J01	Connector, M36-M87-02	DCN034601
5J02	Connector, M36-M87-03	DCN034611
5J03	Connector, M36-M87-06	DCN034641
5P01	Connector, M36-02-30-114P	DCN034851
5P02	Connector, M36-03-30-134P	DCN034911
5P03	Connector, M36-06-30-114P	DCN034891
5P04	Connector, M33-03-30-114P	DCN034651
5P05	Same as 5P04	

VERTICAL CONTROL

CIRCUIT REFERENCE	DESCRIPTION	IWATSU PART NO.
6C01	Cap., 22p, ± 5%, 50V, Cer.	DCC239121
6C02	Same as 6C01	
6C03	Same as 6C01	
6C04	Cap., 220P, ± 5%, 50V, Cer.	DCC239171
6C05	Cap., 33p, ± 5%, 50V, Cer.	DCC239011
6C06	Cap., 0.01 μ, +80%, ~ −20%, 50V, Cer.	DCC139501
6C07	Cap., 100p, ± 5%, 50V, Cer.	DCC239051
6C08	Cap., 22 μ, ± 20%, 25V, Elect.	DCE229041
6C09	Same as 6C06	
6C10	Same as 6C10	
6C11	Cap., 22 μ, ± 20%, 25V, Elect.	DCE225151
6C96	Cap., 220p, ±10%, 50V, Cer.	DCC139061
6C97	Cap., 120p, ±10%, 50V, Cer.	DCC130301
6C99	Same as 6C06	
6R01	Res., 33, ± 5%, ¼W, Carbon	DRD139911
6R08	Res., 22k, ± 5%, ¼W, Carbon	DRD139641
6R09	Res., 10k, ± 5%, ¼W, Carbon	DRD139161
6R10	Res., 220, ± 5%, ¼W, Carbon	DRD237671
6R11	Same as 6R10	
6R12	Same as 6R01	
6R17	Res, 1k, ± 5%, ¼W, Carbon	DRD139141
6R18	Res., 220, ± 5%, ¼W, Carbon	DRD139321
6R19	Res., 820, ± 5%, ¼W, Carbon	DRD237811
6R20	Same as 6R10	
6R21	Same as 6R10	
6R22	Same as 6R10	
6R23	Same as 6R10	
6R24	Same as 6R10	
6R25	Same as 6R18	
6R26	Same as 6R18	
6R98	Same as 6R10	

CIRCUIT REFERENCE	DESCRIPTION	IWATSU PART NO.
6RA01	Resistors-array, 6-4.7kΩk	DFB011361
6RA02	Resistors-array, 4-4.7kΩk	DFB011151
6D01	Diode, 1k34A	DDD010101
6D02	Same as 6D01	
6D03	Diode, 1S953	DDD010821
6D04	Same as 6D03	
6D05	Same as 6D03	
6D06	Same as 6D01	
6Q01	Transistor, 2SA1015Y	DTR119011
6Q02	Transistor, 2SC1815GR	DTR139011
6Q03	Same as 6Q02	
6Q04	Same as 6Q02	
6Q05	Same as 6Q02	
6IC01	IC, SN74LS04N	DIC140091
6IC02	IC, SN74LS08N	DIC140091
6IC03	IC, SN74LS00N	DIC140011
6IC04	Same as 6IC03	
6IC05	IC, SN74LS112N	DIC14111
6S01	Push switch, SUJ50A	DSW014921
6J01	Connector, M31-M87-10	DCN034531
6J02	Connector, M36-M87-02	DNC034601
6J03	Connector, M36-M87-03	DCN034611
6P01	Connector, M33-10-30-114P	DCN034721
6P02	Connector, M36-02-30-114P	DCN034851
6P03	Connector, M36-03-30-114P	DCN034861

A & B TRIGGER GENERATOR

CIRCUIT REFERENCE	DESCRIPTION	IWATSU PART NO.
7C01	Cap., 0.22 μ, ± 10%, 50V, Poly.	DCF127231
7C02	Cap., 100p, ±5%, 50V, Cer.	DCC239051
7C03	Cap., 330p, ± 5%, 50V, Cer.	DCC234901
7C04	Cap., 0.01μ, +80%～−20%, 50V, Cer.	DCC139501
7C05	Cap., 2.2 μ, ±20%, 40V, Elect.	DCE232311
7C06	Cap., 0.047μ, ±10%, 50V, Poly.	DCF129081
7C07	Same as 7C04	
7C08	Same as 7C04	
7C09	Same as 7C04	
7C10	Same as 7C04	
7C11	Same as 7C04	
7C12	Same as 7C01	
7C13	Same as 7C03	
7C14	Same as 7C04	
7C15	Same as 7C04	
7C16	Same as 7C04	
7C17	Same as 7C04	
7C18	Same as 7C04	
7C19	Cap., 22μ, ±20%, 25V, Elect.	DCE229041
7C20	Same as 7C05	
7C21	Same as 7C05	
7C22	Same as 7C06	
7C23	Same as 7C06	
7C24	Same as 7C02	
7C25	Same as 7C19	
7C27	Same as 7C19	
7C28	Cap., 47, ±5%, 50V, Cer.	DCC233201
7C29	Same as 7C22	
7C30	Same as 7C04	
7C33	Same as 7C19	
7C34	Cap., 22 μ, ± 20%, 25V, Elect.	DCE225151
7C35	Same as 7C34	
7C36	Same as 7C19	
7C37	Same as 7C04	
7C38	Same as 7C04	
7C39	Same as 7C04	
7C40	Same as 7C19	
7C43	Same as 7C19	
7C44	Same as 7C34	
7C45	Cap., 0.1 μ, ±10%, 50V, Poly.	DCF120351
7C46	Same as 7C02	
7C47	Same as 7C04	
7C48	Same as 7C05	
7C62	Same as 7C34	
7C95	Cap., 0.01μ, ±10%, 50V, Cer.	DCC133571
7C96	Cap., 220p, ± 10%, 50V, Cer.	DCC130701
7C97	Same as 7C96	
7C98	Same as 7C96	
7C99	Same as 7C96	
7R01	Res., 22, ± 5%, ¼W, Carbon	DRD139751
7R02	Res., 100k, ±5%, ¼W, Carbon	DRD139751
7R03	Same as 7R02	
7R04	Res., 3.9k, ±5%, ¼W, Carbon	DRD139521
7R05	Same as 7R04	
7R06	Res., 220, ±5%, ¼W, Carbon	DRD139321
7R07	Same as 7R04	
7R08	Res., 1.5k, ± 5%, ¼W, Carbon	DRD139431
7R09	Res., 3.3k, ±5%, ¼W, Carbon	DRD139501
7R10	Res., 4.7k, ± 5%, ¼W, Carbon	DRD139151
7R13	Same as 7R01	
7R14	Res., 330k ±5%, ¼W, Carbon	DRD139851
7R15	Res., 51k, ±5%, ¼W, Carbon	DRD139721
7R16	Same as 7R02	
7R17	Res., 1.3k, ± 5%, ¼W, Carbon	DRD138751
7R18	Res., 100k, ± 5%, ¼W, Carbon	DRD139751
7R19	Res., 18k, ±5%, ¼W, Carbon	DRD139631
7R21	Res., 15k, ±5%, ¼W, Carbon	DRD139611
7R22	Res., 50k, Var., 0.2W, Carbon	DRV146811
7R23	Res., 3.3k, ±1%, ¼W, Metal	DRE939661
7R24	Res., 330, ±1%, ¼W, Metal	DRE939621
7R25	Same as 7R23	
7R26	Res., 47k, Var., 0.5W, Cermet	DRV430601
7R28	Same as 7R26	
7R29	Same as 7R23	
7R30	Same as 7R06	
7R31	Res , 47, ±5%, ¼W, Carbon	DRD139261
7R32	Res., 2.2k, ± 5%, ¼W, Carbon	DRD139461
7R33	Same as 7R32	
7R34	Same as 7R31	
7R35	Res., 470, ± 5%, ¼W, Carbon	DRD139371

CIRCUIT REFERENCE	DESCRIPTION	IWATSU PART NO.
7R36	Res., 150, ± 5%, ¼W, Carbon	DRD139101
7R37	Same as 7R32	
7R38	Same as 7R06	
7R39	Same as 7R02	
7R41	Same as 7R01	
7R42	Res., 390,± 5%, ¼W, Carbon	DRD139361
7R43	Same as 7R06	
7R44	Same as 7R32	
7R45	Same as 7R31	
7R46	Same as 7R36	
7R47	Same as 7R06	
7R48	Same as 7R35	
7R49	Same as 7R32	
7R50	Same as 7R31	
7R51	Same as 7R24	
7R52	Same as 7R23	
7R53	Same as 7R26	
7R54	Same as 7R23	
7R55	Same as 7R22	
7R57	Same as 7R36	
7R58	Res., 1k, ±5%, ¼W, Carbon	DRD139141
7R59	Same as 7R58	
7R60	Same as 7R35	
7R61	Same as 7R58	
7R62	Same as 7R58	
7R63	Res., 330, ±5%, ¼W, Carbon	DRD139351
7R64	Res., 680, ± 5%, ¼W, Carbon	DRD139391
7R65	Res., 750, ±5%, ¼W, Carbon	DRD139401
7R67	Same as 7R63	
7R68	Res., 47k, ±5%, ¼W, Carbon	DRD139171
7R69	Same as 7R64	
7R70	Same as 7R64	
7R71	Same as 7R64	
7R72	Same as 7R63	
7R73	Same as 7R06	
7R74	Same as 7R02	
7R75	Same as 7R58	
7R76	Res., 100,± 5%, ¼W, Carbon	DRD139291
7R79	Res., 5.1k, ¼W, Carbon	DRD139531
7R80	Same as 7R01	
7R82	Res., 680, ±5%, ¼W, Carbon	DRD237791
7R83	Same as 7R82	

CIRCUIT REFERENCE	DESCRIPTION	IWATSU PART NO.
7R84	Same as 7R82	
7R85	Res., 10, ± 5%, ¼W, Carbon	DRD139211
7R86	Same as 7R85	
7R87	Same as 7R85	
7R88	Same as 7R85	
7R89	Same as 7R82	
7R90	Res., 91, ± 5%, ¼W, Carbon	DRD134581
7R91	Same as 7R90	
7R92	Same as 7R36	
7R93	Same as 7R01	
7R94	Res., 150, ± 5%, ¼W, Carbon	DRD237631
7D01	Diode, 1S953	DDD010051
7D02	Same as 7D01	
7D03	Same as 7D01	
7D04	Diode, 1S953 TA21R	DDD010821
7D05	Same as 7D04	
7D06	Same as 7D04	
7D07	Same as 7D04	
7D08	Same as 7D04	
7D09	Same as 7D04	
7D10	Same as 7D01	
7D11	LED, TLG206	DDD071121
7D12	Same as 7D04	
7D13	Z.Diode, RD4.7EB	DDD033511
7D14	Diode, RD4.7EB TA21A	DDD031771
7D15	Same as 7D04	
7D16	Same as 7D01	
7Q01	Transistor, 2SK117-GR	DTR215311
7Q02	Transistor, 2SC1815GR	DTR139011
7Q03	Transistor, 2S1834	DTR131031
7Q04	Same as 7Q02	
7Q05	Transistor, 2SA1015Y	DTR119011
7Q06	Same as 7Q02	
7Q07	Same as 7Q02	
7Q08	Same as 7Q02	
7Q09	Tranistor, 2SC2037	DTR137591
7Q10	Same as 7Q09	
7Q11	Same as 7Q01	
7Q12	Same as 7Q03	
7Q13	Same as 7Q02	

CIRCUIT REFERENCE	DESCRIPTION	IWATSU PART NO.
7Q14	Same as 7Q02	
7Q15	Same as 7Q09	
7Q16	Same as 7Q09	
7Q17	Transistor, 2SA1206	DTR115301
7Q18	Same as 7Q02	
7Q19	Same as 7Q17	
7Q20	Same as 7Q02	
7IC01	IC, F10107DC	DIC310051
7IC02	IC, SN74LS96N	DIC140971
7IC03	IC, SN74LS00N	DIC170011
7IC04	IC, SN7400N	DIC110011
7S02	Switch, SUJ45A	DSW014891
7S04	Switch, SUJ35A	DSW014881

CIRCUIT REFERENCE	DESCRIPTION	IWATSU PART NO.
7J01	Connector, M36-M87-04	DCN034621
7J02	Same as 7J01	
7J04	Connector, M36-M87-02	DCN034601
7J05	Connector, M36-M87-05	DCN034631
7J06	Same as 7J01	
7J07	Same as 7J01	
7P01	Connector, M36-04-30-114P	DCN034871
7P02	Same as 7P01	
7P04	Connector, M36-02-30-114P	DCN034851
7P05	Connector, M36-05-30-114P	DCN034931
7P06	Connector, M36-04-30-114P	DCN043921
7P07	Same as 7P06	
7P08	Same as 7P04	
7P09	Same as 7P04	

CIRCUIT REFERENCE	DESCRIPTION	IWATSU PART NO.
A SWEEP GENERATOR		
8C01	Cap., 220p, ±5%, 50V, Cer.	DCC234501
8C02	Cap., 15p, ±5%, 50V, Cer.	DCC239221
8C03	Same as 8C02	
8C04	Cap., 100p, ±10%, 50V, Cer.	DCC139031
8C05	Cap., 0.01 μ, +80%,~ −20%, 50V, Cer.	DCC139501
8C06	Same as 8C05	
8C07	Same as 8C04	
8C08	Same as 8C05	
8C09	Same as 8C05	
8C11	Cap., 22 μ, +20%, 25V, Elect.	DCE229041
8C12	Same as 8C11	
8C13	Same as 8C11	
8C14	Same as 8C05	
8C15	Same as 8C05	
8C16	Same as 8C05	
8C17	Same as 8C05	
8C50	Cap., 56p, ± 5%, 50V, Cer.	DCC239251
8C51	Cap., 4 ~34p, Var., 250V, Cer.	DCV019541
8C97	Cap., 10p, ± 0.5p, 50V, Cer.	DCC239041
8C98	Same as 8C97	
8C99	Cap., 68p, ± 5%, 50V, Cer.	DCC233601
8R01	Res., 4.7k, ±5%, ¼W, Carbon	DRD139151
8R02	Res., 100k, ±10%, ¼W, Carbon	DRD139751
8R03	Res., 500k, Var., 0.2W, Carbon	DRV146861
8R04	Res., 1k, Var., 0.5W, Cermet	DRV430571
8R05	Res., 1.8k, ±5%, ¼W, Carbon	DRD139441
8R06	Res., 15k, ±5%, ¼W, Carbon	DRD139611
8R07	Same as 8R06	
8R08	Res., 2.2k, ± 5%, ¼W, Carbon	DRD139461
8R09	Same as 8R08	
8R10	Res., 10k, ±5%, ¼W, Carbon	DRD139161
8R11	Res., 100 ±5%, ¼W, Carbon	DRD139291
8R12	Res., 12k, ±5%, ¼W, Carbon	DRD139601
8R13	Same as 8R10	
8R14	Res., 510, ±5%, ¼W, Carbon	DRD139381

CIRCUIT REFERENCE	DESCRIPTION	IWATSU PART NO.
8R15	Res., 1.6k, ±5%, ¼W, Carbon	DRD138761
8R16	Res., 4.7k, ±5%, ¼W, Carbon	DRD139151
8R17	Same as 8R11	
8R18	Res., 3.3k, ±1%, ¼W, Metal	DCE939661
8R19	Res., 1.2k, ±1%, ¼W, Metal	DCE939291
8R20	Same as 8R01	
8R21	Same as 8R01	
8R22	Res., 330, ±5%, ¼W, Carbon	DCD139351
8R23	Same as 8R01	
8R24	Same as 8R01	
8R25	Res., 47k, ± 5%, ¼W, Carbon	DRD139171
8R26	Same as 8R25	
8R27	Res., 10, ± 5%, ¼W, Carbon	DRD139211
8R30	Same as 8R25	
8R99	Res., 2.2k, ± 5%, ¼W, Carbon	DRD134911
8D01	Diode, 1S953 TA21R	DDD010821
8D02	Same as 8D01	
8D03	Diode, 1SS97	DDD010451
8D04	Diode, RD5.6EB1 TA21R	DDD031141
8D05	Diode, RD13EB TA21R	DDD031801
8D06	LED., TLR206	DDD070181
8Q01	Transistor, 2SC1815GR	DTR139011
8Q02	Same as 8Q01	
8Q03	Transistor, 2SC1834	DTR131031
8Q04	Same as 8Q03	
8Q05	Transistor, 2N3905	DTR150011
8Q06	Transistor, 2SK30A-Y	DTR210141
8Q07	Same as 8Q06	
8Q08	Same as 8Q01	
8Q09	Same as 8Q05	
8IC01	IC, SN7413N	DIC110141
8IC02	IC, SN74S74N	DIC170211
8IC03	IC, SN7410N	DIC110111
8S01	Switch, SUJ30A	DSW014871

CIRCUIT REFERENCE	DESCRIPTION	IWATSU PART NO.
8J01	Connector, M31-M87-08	DCN034511
8J02	Same as 8J01	
8J03	Connector, M36-M87-05	DCN034631

CIRCUIT REFERENCE	DESCRIPTION	IWATSU PART NO.
8P01	Connector, M33-08-30-114P	DCN034701
8P02	Connector, M33-08-30-134P	DCN034801
8P03	Connector, M36-05-30-114P	DCN034881
8P04	Connector, M36-02-30-114P	DCN034851
8P05	Same as 8P04	

B SWEEP GENERATOR

CIRCUIT REFERENCE	DESCRIPTION	IWATSU PART NO.
9C01	Cap., 5p, ± 0.25%, 50V, Cer.	DCC230901
9C02	Same as 9C01	
9C03	Cap., 0.01μ, +80%,~−20%, 50V, Cer.	DCC153511
9C04	Cap., 100p, ±10%, 50V, Cer.	DCC139031
9C05	Cap., 0.01μ, +80%~ −20%, 50V, Cer.	DCC139501
9C06	Same as 9C05	
9C08	Same as 9C05	
9C09	Cap., 22μ, ±20%, 25V, Elect.	DCE229041
9C10	Same as 9C09	
9C11	Same as 9C05	
9C12	Cap., 120p, ±10%, 50V, Cer.	DCC130301
9C13	Same as 9C05	
9C14	Same as 9C09	
9C15	Same as 9C05	
9C16	Same as 9C05	
9C49	Same as 9C05	
9C50	Cap., 56p, ± 5%, 50V, Cer.	DCC239251
9C51	Cap., 4 ~34p, Var., 250, Cer.	DCV019541
9C97	Cap., 10p, ±0.5p, 50V, Cer.	DCC231701
9R01	Res., 4.7k, ± 5%, ¼W, Carbon	DRD139151
9R02	Res., 1.8k, ± 5%, ¼W, Carbon	DRD139441
9R03	Res., 1k, Var., 0.5W, Cermet	DRV430571
9R04	Res., 10k, ±5%, ¼W, Carbon	DRD139161
9R05	Res., 15k, ± 5%, ¼W, Carbon	DRD139611
9R06	Same as 9R01	
9R07	Res., 2.2k, ±5%, ¼W, Carbon	DRD139461
9R08	Same as 9R07	
9R09	Res., 47k, ± 5%, ¼W, Carbon	DRD139171
9R10	Res., 100, ±5%, ¼W, Carbon	DRD139291
9R11	Same as 9R10	
9R12	Res., 12k, ±5%, ¼W, Carbon	DRD139601
9R13	Same as 9R04	
9R14	Res., 510, ±5%, ¼W, Carbon	DRD139381
9R15	Res., 2.2k, Var., 0.5W, Cermet	DRV430581
9R16	Res., 1k, ±5%, ¼W, Carbon	DRD139141
9R17	Res., 470, ± 5%, ¼W, Carbon	DRD139371
9R18	Same as 9R10	
9R19	Res., 330, ± 5%, ¼W, Carbon	DRD139351
9R20	Same as 9R10	
9R21	Same as 9R01	
9R22	Res., 22k, ±5%, ¼W, Carbon	DRD139641
9R23	Res., 10k, Var., 0.5W, Cermet	DRV430591
9R24	Res., 18k, ± 1%, ¼W, Metal	DRE939351
9R25	Same as 9R05	
9R26	Same as 9R15	
9R27	Same as 9R10	
9R28	Same as 9R01	
9R29	Same as 9R01	
9R30	Same as 9R01	
9R31	Res., 4.7k,±5%, ¼W, Carbon	DRD139151
9R32	Res., 10, ±5%, ¼W, Carbon	DRD139211
9R33	Res., 10k,Var., 1.5W, W.W.	DRV770351
9R99	Res., 220, ±5%, ¼W, Carbon	DRD134671
9D01	Diode, 1k34A	DDD010101
9D02	Diode, 1S953 TA21R	DDD010821
9D03	Diode, 1SS97	DDD010451
9D04	Diode, RD5.6E1 TA21R	DDD031141
9D05	Diode, RD13EB TA21R	DDD031801
9D06	Same as 9D02	
9D07	Same as 9D01	
9D09	Diode, RD3.9EB ~~TA21R~~	DDD030951
9Q01	Transistor, 2SC1815GR	DTR139011
9Q03	Transistor, 2SC1834	DTR131031
9Q04	Same as 9Q03	
9Q05	Transistor, 2N3905	DTR150011
9Q06	Transistor, 2SK30A -Y	DTR210141
9Q07	Same as 9Q06	
9Q08	Same as 9Q01	
9Q09	Same as 9Q05	
9Q10	Same as 9Q01	
9Q11	Same as 9Q01	
9Q12	Transistor, 2SA1015Y	DTR119011

CIRCUIT REFERENCE	DESCRIPTION	IWATSU PART NO.
9IC01	IC, TL810CP	DIC630731
9IC02	IC, SN74S00N	DIC174001
9IC03	Same as 9I02	
9J01	Connector, M36-M87-02	DCN034601
9J03	Connector, M36-M87-03	DCN034611
9P01	Connector, M36-02-30-114P	DCN034851
9P03	Connector, M36-03-30-114P	DCN034861
9P04	Same as 9P01	

A & B TIMING CIRCUIT

CIRCUIT REFERENCE	DESCRIPTION	IWATSU PART NO.
10C01	Cap., 2.2 μ, ± 20%, 50V, Elect.	DCE249131
10C02	Cap., 0.22 μ, ±20%, 50V, Poly.	DCF120391
10C03	Cap., 0.022μ, ± 20%, 50V, Poly.	DCF129041
10C04	Cap., 2200p, ± 20%, 50V, Poly.	DCF129061
10C08	Cap., 1μ, ±0.5%, 250V, Poly.	DCF260151
10C09	Cap., 0.1 μ, ±1%, 50V, Poly.	DCF420271
10C10	Cap., 9900p, ±0.25%, 50V, Poly.	DCF125791
10C11	Cap., 900p, ±0.25%, 50V, Poly.	DCF125801
10C12	Cap., 0.01μ, +80%, ~ −20%, 50V, Cer.	DCC139501
10C13	Same as 10C12	
10C14	Same as 10C01	
10C19	Same as 10C09	
10C20	Same as 10C10	
10C21	Same as 10C11	
10R01	Res., 10, ±5%, ¼W, Carbon	DRD139211
10R02	Res., 7.5M, ±1%, ½W, Metal	DRE560141
10R03	Res., 2 .5M ±1%, ½W, Metal	DRE560131
10R04	Res., 1.25M, ±1%, ½W, Metal	DRE560121
10R05	Res., 750k, ±0.5%, ¼W, Metal	DRE139911
10R06	Res., 250k, ±0.5%, ¼W, Metal	DRE139691
10R07	Same as 10R06	
10R08	Res., 126.2k, ±0.5%, 1/8W, Metal	DRE229141
10R09	Res., 55.6k, ±0.5%, 1/8W, Metal	DRE229131
10R10	Res., 25k, ±0.5%, 1/8W, Metal	DRE223651
10R11	Res., 12.5k, ±0.5%, 1/8W, Metal	DRE229111
10R12	Res., 10, ±5%, ¼W, Carbon	DRD139321
10R13	Res., 470, ±5%, ¼W, Carbon	DRD139371
10R14	Res., 7.5k, ±1%, ¼W, Metal	DRE939801
10R15	Res., 6.8k, ±1%, ¼W, Metal	DRE939331
10R16	Res., 33k, ±10%, ¼W, Metal	DRE939091
10R17	Same as 10R16	
10R18	Res., 27k, ±1%, ¼W, Metal	DRE939361
10R19	Res., 2.2k, Var., 0.5W, Cermet	DRV430581
10R20	Res., 5.6k, ±1%, ¼W, Metal	DRE939671
10R21	Same as 10R02	
10R22	Same as 10R03	
10R23	Same as 10R04	
10R24	Same as 10R05	
10R25	Same as 10R06	
10R26	Same as 10R06	
10R27	Same as 10R08	
10R28	Same as 10R09	
10R29	Same as 10R10	
10R30	Same as 10R11	
10R31	Same as 10R12	
10R32	Res., 50k, Var., 0.1W, Carbon	DRV147401
10R33	Res., 13k, ± 5%, ¼W, Carbon	DRD138911
10R34	Res., 10k, ± 5%, ¼W, Carbon	DRD139161
10R35	Same as 10R01	
10R99	Same as 10R01	
10D01	Diode, 1S953 TA21R	DDD010821
10D02	Same as 10D01	
10D03	LED., TLR206	DDD070181
10Q01	Transistor, 2S3905	DTR150011
10Q02	Same 10Q01	
10S01	Rotary switch, PS22BH3-6-22/H2-4-19/50kB	DSW034621

HORIZONTAL AMPLIFIER

CIRCUIT REFERENCE	DESCRIPTION	IWATSU PART NO.
11C01	Cap., 0.01μ, ±10%, 50V, Cer.	DCC133571
11C02	Same as 11C01	
11C03	Cap., 22p, ±20%, 25V, Elect.	DCE229041
11C04	Same as 11C01	
11C05	Same as 11C01	
11C07	Cap., 1.3 ~3p, Var., 250V, Cer.	DCV019672
11C08	Cap., 5p, ±0.25p, 50V, Cer.	DCC230901
11C09	Same as 11C01	
11C10	Same as 11C07	
11C12	Same as 11C08	
11C13	Same as 11C01	
11C14	Cap., 0.01μ, +80% ~−20%, 50V, Cer.	DCC139501
11C16	Same as 11C14	
11C17	Same as 11C14	
11C18	Same as 11C14	
11C19	Same as 11C03	
11C20	Same as 11C03	
11C22	Same as 11C14	
11C23	Cap., 100p, +80%~−20%, 50V, Cer.	DDC159501
11C24	Same as 11C23	
11C97	Cap., 2p, ±0.25p, 500V, Cer.	DCC250501
11C98	Same as 11C97	
11C99	Same as 11C14	
11R01	Res., 10k, ±1%, ¼W, Metal	DRE939301
11R02	Res., 6.8k, ±1%, ¼W, Metal	DRE939331
11R03	Res., 8.2k, ±5%, ¼W, Carbon	DRD139581
11R04	Same as 11R03	
11R05	Res., 4.7k, Var., 0.5W, Cermet	DRV430621
11R06	Res., 1k, Var., 0.5W, Cermet	DRV430571
11R07	Res., 3k, ±1%, ¼W, Metal	DRE939031
11R09	Res., (10k, 50k), Var., 1/8W	DRV146841
(11R10, 11S10)	Carbon, with switch	

CIRCUIT REFERENCE	DESCRIPTION	IWATSU PART NO.
11R11	Res., 180k, ±5%, ¼W, Carbon	DRD139871
11R12	Res., 13k, ± 5%, ¼W, Carbon	DRD138911
11R13	Res., 5.6k, ±1%, ¼W, Metal	DRE939671
11R14	Res., 3 3k, ±1%, ¼W, Metal	DRE939661
11R15	Same as 11R14	
11R16	Same as 11R13	
11R17	Res., 10k, ± 5%, ¼W, Carbon	DRD139161
11R18	Same as 11R17	
11R19	Same as 11R03	
11R20	Res 100, ± 5%, ¼W, Carbon	DRD139291
11R21	Res., 2.2k, Var , 0.5W, Cermet	DRV430581
11R22	Same as 11R03	
11R23	Res., 68, ±1%, ¼W, Carbon	DRE939531
11R24	Res., 100, Var., 0.5W, Cermet	DRV430541
11R25	Res., 470, Var., 0.5W, Cermet	DRV430561
11R26	Res., 1.5k, ±1%, ¼W, Metal	DRE130861
11R27	Res., 910, ±1%, ¼W, Metal	DRE939281
11R28	Same as 11R27	
11R29	Res., 15k, ± 5%, ¼W, Carbon	DRD139611
11R30	Res., 12 k, ± 5%, ¼W, Carbon	DRD139601
11R31	Res., 7.5k, ±1%, ¼W, Metal	DRE141041
11R32	Same as 11R31	
11R33	Same as 11R31	
11R34	Same as 11R31	
11R35	Res , 24k, ± 5%, 1W, Metal	DRS221891
11R36	Same as 11R20	
11R37	Same as 11R20	
11R38	Res., 15k, ± 5%, 1W Metal	DRS221231
11R39	Res., 33, ± 5%, ¼W, Carbon	DRD139911
11R40	Same as 11R39	
11R41	Res., 4.7k, ± 5%, ¼W, Carbon	DRD139151
11R42	Same as 11R20	
11R45	Same as 11R20	
11R46	Same as 11R20	
11R50	Same as 11R39	
11R51	Same as 11R39	
11R52	Res., 5.1k, ±5%, ¼W, Carbon	DRD139531
11R53	Res., 11k, ± 5%, ¼W, Carbon	DRD138951
11R54	Res., 3.3k, ± 5%, ¼W, Carbon	DRD139501

CIRCUIT REFERENCE	DESCRIPTION	IWATSU PART NO.
11D01	Diode, 1S953 TA21R	DDD010821
11D02	Same as 11D01	
11D03	Same as 11D01	
11D04	Same as 11D01	
11D05	Same as 11D01	
11D06	Same as 11D01	
11D07	Same as 11D01	
11D08	Same s 11D01	
11D09	Same as 11D01	
11D10	Same as 11D01	
11D11	Same as 11D01	
11D12	Same as 11D01	
11D13	Same as 11D01	
11D14	Diode, DR5.6EB1 TA21R	DDD031141
11Q01	Transistor, 2SC1815GR	DTR139011
11Q02	Same as 11Q01	
11Q03	Transistor, 2N3905	DTR150011

CIRCUIT REFERENCE	DESCRIPTION	IWATSU PART NO.
11Q04	Same as 11Q03	
11Q05	Transistor, 2SC1904GB	DTR137051
11Q06	Same as 11Q05	
11Q07	Transistor, 2SC1907	DTR137611
11Q08	Same as 11Q07	
11Q09	Same as 11Q05	
11Q10	Same as 11Q05	
11RL01	Relay, MZ4.5S	DKD026541
11J01	Connector, M36-M87-03	DCN034611
11J02	Same as 11J01	
11J03	Connector, M31-M87-07	DCN034501
11P01	Connector, M36-03-30-114P	DCN034861
11P02	Connector, M36-03-30-134P	DCN034911
11P03	Connector, M33-07-30-134P	DCN034791

HORIZONTAL CONTROL

CIRCUIT REFERENCE	DESCRIPTION	IWATSU PART NO.
12C01	Cap., 1000p, ±20%, 50V, Cer.	DCC139051
12C02	Cap., 56p, ± 5%, 50V, Cer.	DCC233401
12C03	Same as 12C02	
12C04	Cap., 0.01μ, +80%~ −20%, 50V, Cer.	DCC139501
12C06	Cap., 22μ, ±20%, 25V, Elect.	DCE229041
12C07	Same as 12C04	
12C08	Same as 12C04	
12C09	Same as 12C04	
12C10	Same as 12C04	
12C13	Same as 12C04	
12C99	Cap., 330p, ±20%, 50V, Cer.	DCC139021
12R01	Res., 1.1k, ±1%, ¼W, Metal	DRE939771
12R02	Res., 1.5k, ±1%, ¼W, Metal	DRE939641
12R03	Res., 5.6k, ±1%, ¼W, Metal	DRE939671
12R04	Same as 12R01	
12R05	Res., 330,± 5%, ¼W, Carbon	DRD139351
12R06	Res., 4.7k, ± 5%, ¼W, Carbon	DRD139151
12R08	Same as 12R06	
12R09	Same as 12R06	
12R10	Same as 12R06	
12R11	Same as 12R06	
12R12	Same as 12R06	
12R13	Res., 15k, ± 5%, ¼W, Carbon	DRD139611
12R14	Same as 12R06	
12R15	Same as 12R06	
12R16	Same as 12R06	
12R17	Same as 12R06	
12R19	Same as 12R06	
12R20	Same as 12R06	
12R22	Res., 360, ±5%, ¼W, Carbon	DRD138731
12R23	Res., 39k, ±5%, ¼W, Carbon	DRD139701
12R24	Res., 50k, Var., 1/8W, Carbon	DRV146821
12R96	Res., 10k, ± 5%, ¼W, Carbon	DRD139161
12R97	Res., 1k, ± 5%, ¼W, Carbon	DRD237831
12R98	Res., 1.3k, ± 5%, ¼W, Carbon	DRD237861

CIRCUIT REFERENCE	DESCRIPTION	IWATSU PART NO.
12D01	Diode, 1S953 TA21A	DDD010821
12D02	Same as 12D01	
12D03	Same as 12D01	
12D04	Same as 12D01	
12D05	Same as 12D01	
12D06	Same as 12D01	
12D07	Same as 12D01	
12D08	Same as 12D01	
12D09	Same as 12D01	
12D10	Diode, 1k34A	DDD010101
12D11	Same as 12D10	
12D12	Same as 12D10	
12D13	Same as 12D10	
12D15	Same as 12D10	
12D16	Same as 12D10	
12D17	Same as 12D01	
12IC01	IC, SN7410N	DIC110111
12IC02	IC, SN7407N	DIC110081
12IC03	IC, SN7400N	DIC110011
12S01	Switch, SUJ50A	DSW014911
12J03	Connector, M36-M87-05	DCN034631
12J04	Connector, M36-M87-04	DCN034621
12J05	Connector, M36-M87-03	DCN034611
12P01	Connector, FF-12-002	DCN030701
12P02	Connector, FF-12-002	DCN030691
12P03	Connector, M36-05-30-114P	DCN034881
12P04	Connector, M36-04-30-114P	DCN034871
12P05	Connector, M36-03-30-114P	DCN034861

POWER SUPPLY & CALIBRATOR

CIRCUIT REFERENCE	DESCRIPTION	IWATSU PART NO.
13C01	Cap., 0.047 μ ±10%, 50V, Poly.	DCF129111
13C02	Cap., 0.01μ, +80% ~−20%, 50V, Cer.	DCC139501
13C03	Same as 13C01	
13C04	Cap., 100μ, ±20%, 25V, Elect.	DCE229071
13C05	Cap., 1000p, ±20%, 50V, Cer.	DCC139051
13C06	Cap., 4700μ, ±20%, 16V, Elect.	DCE920711
13C07	Same as 13C04	
13C08	Cap., 470μ, ±20%, 100V, Elect.	DCE950101
13C09	Same as 13C02	
13C11	Cap., 10μ, ±20%, 160V, Elect.	DCE265021
13C12	Same as 13C08	
13C13	Same as 13C02	
13C15	Same as 13C11	
13C16	Cap., 2200μ, ±20%, 35V, Elect.	DCE925311
13C17	Same as 13C02	
13C18	Same as 13C02	
13C19	Same as 13C04	
13C20	Same as 13C16	
13C21	Cap., 22μ, ±20%, 25V, Elect.	DCE229041
13C22	Same as 13C02	
13C23	Same as 13C04	
13C24	Same as 13C02	
13C30	Same as 13C04	
13R01	Res., 1k, ± 5%, ¼W, Carbon	DRD139141
13R02	Res., 2.2M, ±5%, ¼W, Carbon	DRD139831
13R03	Res., 4.7, ±5%, 2W, Metal	DRS231121
13R04	Res., 50, Var., 0.5W, Carbon	DRV350201
13R06	Res., 12k, ±5%, ¼W, Carbon	DRD139601
13R07	Res., 10k, ± 5%, ¼W, Carbon	DRD139161
13R08	Same as 13R07	
13R09	Same as 13R06	
13R10	Same as 13R01	
13R12	Same as 13R07	
13R13	Res., 820, ±1%, ¼W, Metal	DRE939151
13R14	Res., 220, Var., 0.5W, Cermet	DRV430551
13R15	Res., 30, ±1%, ¼W, Metal	DRE130461
13R16	Res., 22k, ± 5%, ¼W, Carbon	DRD139641
13R17	Res., 220k, ±5%, ¼W, Carbon	DRD139791
13R18	Res., 150, ±5%, ¼W, Carbon	DRD139101
13R19	Res., 330, ± 5%, ¼W, Carbon	DRD139351
13R20	Res., 10k, ±1%, ¼W, Metal	DRE939301
13R21	Res., 100k, ±1%, ¼W, Metal	DRE939191
13R22	Same as 13R20	
13R23	Same as 13R17	
13R24	Res., 10k, ± 5%, ½W, Carbon	DRD145071
13R25	Res., 4.7k, ±5%, 1W, Metal	DRS221221
13R26	Res., 2.2, ± 5%, ¼W, Carbon	DRD138881
13R27	Same as 13R20	
13R28	Res., 47k, ±1%, ¼W, Metai	DRE939371
13R29	Same as 13R20	
13R30	Res., 47k, ±5%, ¼W, Carbon	DRD139171
13R31	Same as 13R25	
13R32	Res., 1.2k, ± 5%, 1W, Metal	DRS221211
13R33	Res., 4.7k, ±1%, ¼W,Metal	DRE939471
13R34	Same as 13R20	
13R35	Same as 13R20	
13R36	Same as 13R30	
13R37	Res., 470, ±5%, ¼W, Carbon	DRD139371
13R38	Res., 0.68, ±5%, ¼W, Metal	DRS221131
13R39	Same as 13R33	
13R40	Same as 13R33	
13R41	Res., 1k, Var., 0.5W, Cermet	DRV430571
13R42	Same as 13R33	
13R43	Same as 13R18	
13R44	Res., 360, ±5%, ¼W, Carbon	DRD138731
13R45	Same as 13R01	
13R51	Res., 1k, ± 5%, ¼W, Carbon	DRD134831
13D01	Diode, 1G4B1	DDD021031
13D02	Same as 13D01	
13D03	Same as 13D01	
13D04	Same as 13D01	
13D05	Diode, 1S953 TA21R	DDD010821
13D06	Diode, RD24EB TA21R	DDD032281
13D07	Same as 13D06	
13D08	Same as 13D05	
13D09	Diode, V06E	DDD020061
13D10	Same as 13D06	
13D11	Same as 13D06	
13D12	Same as 13D05	

CIRCUIT REFERENCE	DESCRIPTION	IWATSU PART NO.
13D13	Diode, RD5.6EB1 TA21R	DDD031141
13D14	Same as 13D05	
13D15	Same as 13D13	
13D16	Diode, RD13EB TA21R	DDD031801
13D17	LED., TLG-104	DDD071111
13Q01	Transistor, 2SC1815GR	DTR139011
13Q02	Same as 13Q01	
13Q03	Transistor, 2SA1015Y	DTR119011
13Q04	Transistor, 2SB861C	DTR125181
13Q05	Transistor, 2SD1137	DTR145711
13Q06	Same as 13Q01	
13Q07	Transistor, 2SC1061C	DTR130661
13Q08	Same as 13Q01	
13Q09	Same as 13Q03	
13Q10	Same as 13Q03	
13Q11	Transistor, 2SB857C	DTR125231
13Q12	F.E.T., 2SK30A-Y	DTR210141
13IC01	IC, μPC14305H	DIC650021
13IC02	IC, NJM4558D	DIC613031
13IC03	Same as 13IC02	
13S01	Switch, SDG5P-E	DSW016531
13S02	Switch, SUJ12A	DSW014841
13PL01	Scale Illumination Lamp	DLP016092
13PL02	Same as 13PL01	
13PL03	Same as 13PL01	

CIRCUIT REFERENCE	DESCRIPTION	IWATSU PART NO.
13L02	Line voltage range, S-17220-04	DCN093521
13J03	Connector, M31-M86-10	DCN034531
13J04	Connector, M31-M87-12	DCN034541
13J05	Connector, M36-M87-04	DCN034621
13J06	Same as 13J05	
13J07	Connector, M36-M87-05	DCN034631
13J08	Connector, M31-M87-07	DCN034501
13J09	Connector, M36-M87-02	DCN034601
13J10	Connector, M36-M87-06	DCN034641
13J11	Same as 13J09	
13J12	Same as 13J09	
13J13	Same as 13J09	
13P01	Connector, CM-3	DCN013361
13P02	Connector, X-17213	DCN093511
13P03	Connector, M33-10-30-114P	DCN034721
13P04	Connector, M33-12-30-114P	DCN034731
13P05	Connector, M36-04-30-114P	DCN034871
13P06	Same as 13P05	
13P07	Connector, M36-05-30-114P	DCN034881
13P08	Connector, M33-07-30-114P	DCN034691
13P09	Connector, M36-02-30-114P	DCN034851
13P10	Connector, M36-06-30-114P	DCN034891
13P11	Same as 13P09	
13P12	Same as 13P09	
13P13	Same as 13P09	
13T01	Power Transformer, FS-34437	DCL212381
13F01	Fuse FSA-1	DFU020141
13F02	Same as 13F01	

Z AXIS & CRT CIRCUIT

CIRCUIT REFERENCE	DESCRIPTION	IWATSU PART NO.
14C01	Cap., 47 μ, ± 20%, 100V, Elect.	DCE255091
14C02	Cap., 0.015p, ±10%, 50V, Poly	DCF129031
14C03	Cap., 10μ, ± 20%, 160V, Elect.	DCE265021
14C04	Cap., 0.01μ, +80% ~–20%, 3kV, Cer.	DCC173501
14C05	Same as 14C04	
14C06	Same as 14C04	
14C07	Cap., 1000p, ± 20%, 3kV, Cer.	DCC171831
14C08	Cap., 0.01μ, ± 10%, 50V, Poly.	DCE120231
14C09	Cap., 100p, ±10%, 500V, Cer.	DCC259141
14C10	Same as 13C07	
14C11	Cap., 4700p, ± 20%, 3kV, Cer.	DCC172911
14C13	Cap., 0.01μ, +80% ~–20%, 50V, Cer.	DCC139501
14C14	Cap., 1000p, ±10%, 500V, Cer.	DCC159011
14C15	Same as 14C14	
14C16	Same as 14C13	
14C20	Same as 14C13	
14C21	Cap., 22p, ±5%, 50V, Cer.	DCC239121
14C22	Same as 14C13	
14C23	Cap., 0.022 μ, ±10%, 200V, Poly.	DCF150271
14C24	Cap., 22μ, ±20%, 25V, Elect.	DCE229041
14C25	Same as 14C24	
14C26	Same as 14C13	
14C27	Cap., 0.1μ, ± 10%, 50V, Poly.	DCF120351
14C96	Same as 14C14	
14C98	Cap., 22μ, ± 20%, 25V, Elect.	DCE225151
14C99	Same as 14C27	
14L01	Rotation Coil	DCL140111
14R01	Res., 510, ± 5%, ¼W, Carbon	DRD139381
14R02	Res., 680, ± 5%, ¼W, Carbon	DRD139391
14R03	Res., 100k, ± 5%, ¼W, Carbon	DRD139751
14R04	Res., 430k, ± 5%, ¼W, Carbon	DRD139021
14R05	Res., 2k, ± 5%, ¼W, Carbon	DRD139451
14R06	Res., 1k, ± 5%, ¼W, Carbon	DRD139141
14R07	Res., 100k, Var., 0.5W, Cermet	DRV430631
14R08	Res., 430k, ±1%, ¼W, Metal	DRE131461
14R09	Res., 10k, ± 5%, ¼W, Carbon	DRD139161

CIRCUIT REFERENCE	DESCRIPTION	IWATSU PART NO.
14R10	Res., 2.2, ± 5%, ¼W, Carbon	DRD138881
14R11	Same as 14R03	
13R12	Res., 2.2M, ± 5%, 1W, Metal	DRG940311
14R13	Res., 2M, Var., 1.5W, Cermet	DRV350231
14R14	Res., 7.5M, ±5%, 2W, Metal	DRG950111
14R15	Res., 1M, ± 5%, ¼W, Carbon	DRD238551
14R16	Res., 16M, ±5%, 1W, Metal	DRG940291
14R17	Same as 14R07	
14R18	Res., 22k, ± 5%, ¼W, Carbon	DRD139641
14R19	Res., 39k, ±5%, ¼W, Carbon	DRD139701
14R20	Same as 14R07	
14R21	Same as 14R07	
14R22	Res., 27k, ± 5%, ¼W, Carbon	DRD139661
14R23	Res., 47k, ±5%, ¼W, Carbon	DRD139171
14R24	Res., 330, ± 5%, ¼W, Carbon	DRD139351
14R26	Res., (20k, 20k), Var., 0.05W, Carbon	DRV131421
14R30	Res., 4.7k, ±5%, 1W, Metal	DRS221221
14R31	Res., 3.3k, ± 5%, ¼W, Carbon	DRD139501
14R32	Same as 14R06	
14R34	Res., 10k, Var., 1.5W, Cermet	DRV350221
14R35	Res., 470k, ±5%, ¼W, Carbon	DRD139371
14R36	Res., 3.3k, ±1%, ¼W, Metal	DRE939661
14R37	Res., 750, ±1%, ¼W, Metal	DRE130801
14R38	Res., 1.5k, ± 5%, ¼W, Carbon	DRD139431
14R39	Res., 4.7k, ± 5%, ¼W, Carbon	DRD139151
14R40	Res., 1M, ± 5%, ¼W, Carbon	DRD139821
14R41	Same as 14R01	
14R42	Res., 68k, ±5%, ¼W,Carbon	DRD139731
14R43	Same as 14R42	
14R44	Res., 100, ± 5%, ¼W, Carbon	DRD139291
14R45	Same as 14R06	
14R46	Same as 14R31	
14R47	Same as 14R24	
14R48	Same as 14R03	
14R49	Same as 14R44	
14R50	Res., 82k, ± 5%, ¼W, Carbon	DRD139741
14R51	Same as 14R09	
14R52	Res., 47, ± 5%, ¼W, Carbon	DRD139261
14R53	Res., 56k, ±1%, ¼W, Metal	DRE939381
14R96	Res,. 15k, ± 5%, ¼W, Carbon	DRD135111
14R97	Same as 14R09	

CIRCUIT REFERENCE	DESCRIPTION	IWATSU PART NO.
14R98	Res., 22k, ± 5%, ¼W, Carbon	DRD238151
14R99	Res., 10k, ±5%, ¼W, Carbon	DRD238071
14D01	Diode, 1S953 TA21R	DDD010821
14D02	Same as 14D01	
14D03	Diode, HVT-30S	DDD021421
14D04	Diode, ESJA35-12	DDD022111
14D05	Same as 14D04	
14D06	Same as 14D04	
14D07	Same as 14D04	
14D10	Same as 14D01	
14D11	Same as 14D01	
14D12	Same as 14D01	
14D13	Same as 14D01	
14D14	Diode, RD3.0EB TA21R	DDD032241
14D15	Same as 14D01	
14D16	Same as 14D01	
14D15A	High Voltage Block, MSL-3585A	DES050551
14Q01	Transistor, 2SC2SC2502	DTR137651
14Q02	Transistor, 2SC1834	DTR131031
14Q10	Same as 14Q02	
14Q11	Transistor, 2SC1815GR	DTR139011
14Q12	Transistor, 2SB648AC	DTR125191
14Q13	Transistor, 2SD668AC	DTR145381
14Q14	Same as 14Q11	
14Q15	Transistor, 2SA1015Y	DTR119011
14Q16	Same as 14Q11	

CIRCUIT REFERENCE	DESCRIPTION	IWATSU PART NO.
14IC01	IC, NJM 4558D	DIC613031
14J01	Connector, M36-M87-06	DCN034641
14J02	Connector, M36-M87-02	DCN034601
14J03	Same as 14J02	
14J05	Same as 14J02	
14J06	Same as 14J02	
14J07	Same as 14J02	
14J08	Connector, M36-M87-04	DCN034621
14J11	Same as 14J01	
14J12	Same as 14J02	
14J13	Same as 14J02	
14J14	Connector, M36-M87-05	DCN034631
14J15	Connector, M31-M87-08	DCN034511
14J20	Connector, BNC080	DCN040711
14P01	Connector, M36-06-30-114P	DCN034891
14P02	Connector, M36-02-30-114P	DCN034851
14P03	Same as 14P02	
14P05	Same as 14P02	
14P06	Same as 14P02	
14P07	Same as 14P02	
14P08	Connector, M36-04-30-134P	DCN034921
14P11	Same as 14P01	
14P12	Same as 14P02	
14P13	Same as 14P02	
14P14	Connector, M36-05-30-114P	DCN034881
14P15	Connector, M36-08-30-114P	DCN034701
14P16	Same as 14P02	
14T01	High Voltage Transformer, FS-34442	DCL220351
14NE1	Neon Lamp, NL-235D	DLP025171
14V01	Cathode Ray Tube, S-8551B31	DET016051

CIRCUIT REFERENCE	DESCRIPTION	IWATSU PART NO.	CIRCUIT REFERENCE	DESCRIPTION	IWATSU PART NO.
PRINTED CIRCUIT BOARD			POWER BOARD		KPN190321
			HV & TRIGGER BOARD		KPN190431
VERTICAL BOARD		KPN190121	MAIN BOARD		KPN190521
HORIZONTAL BOARD		KPN190221			

UNIVERSAL COUNTER $\boxed{1}$~$\boxed{6}$

CIRCUIT REFERENCE	DESCRIPTION	IWATSU PART NO.
C001	Cap., 47 μ, ±20%, 35V, Elect.	DCE235091
C002 to C008	Cap., 100μ , ±20%, 25V, Elect.	DCE225181
C009	Cap., 0.1μ , ±20%, 63V, Poly.	DCF128301
C010	Cap., 10p, ± 0.5p, 50V, Cer.	DCC231701
C011	Cap., 100μ , ±20%, 16V, Elect.	DCE225041
C012	Cap., 0.01μ , ±10%, 50V, Poly.	DCF120231
C013	Cap., 33p, ± 5%, 50V, Cer.	DCC232801
C014 to C016	Same as C012	
C017	Same as C010	
C018	Same as C011	
C019 to C020	Same as C012	
C021	Cap., 1000p, +80% ∼−20%, 50V, Cer.	DCC151801
C022	Same as C012	
C023	Same as C009	
C024	Cap., 33μ , ±20%, 16V, Elect.	DCE225021
C025	Same as C009	
C026	Same as C010	
C027	Cap., 5∼40p, Var., 250V, Cer.	DCV019751
C028	Same as C012	
C033	Same as C012	
C034	Same as C009	
C035	Same as C012	
C036	Same as C009	
C037	Same as C035	
C038	Cap., 56p, ± 5%, 50V, Cer.	DCC233421
C039	Same as C027	
C040	Same as C009	
C041	Same as C009	
C042	Same as C012	
C050	Same as C012	
C051	Same as C009	
C053	Same as C035	
C054	Cap., 0.47μ , ±20%, 200V, Poly.	DCF171131
C055	Cap., 15p, ± 5%, 50V, Cer.	DCC232031
C056	Same as C027	
C057	Cap., 47p, ±5%, 100V, Mica	DCM242751
C058	Same as C013	
C059	Same as C035	
C060	Same as C035	
C061	Cap., 470μ ,+75%, ∼−10%, 25V, Elect.	DCE122901
C062	Same as C002	
C063	Cap., 2.2 μ, ±20%, 50V, Elect.	DCE244531
C064	Same as C063	
C067	Cap., 1000p, ±10%, 250V, Cer.	DCC151801
C067A	Cap., 4700p, ±1%, 50V, Cer.	DCC132901
C068	Same as C067	
C069	Cap., 4200p, ±10%, 250V, Cer.	DCC152901
C070	Same as C063	
C062A	Cap., 470p, ±10%, 250V, Cer.	DCC151201
C301	Cap., 0.1μ , ± 20%, 63V, Poly.	DCF128301
C302	Cap., 180p, ± 5%, 50V, Cer.	DCC234301
C303	Cap., 1000p, ± 5%, 50V, Cer.	DCC131801
C304	Cap., 680p, ± 5%, 50V, Cer.	DCC131601
C305	Cap., 10 μ, ±20%, 35V, Elect.	DCE130501
C306	Cap., 47 μ, ± 20%, 16V, Elect.	DCE120651
C307	Cap., 470p, ±10%, 50V, Cer.	DCC131201
R001	Res., 39k, ± 5%, ¼W, Carbon	DRD135211
R002	Ress., 1k, ± 5%, ¼W, Carbon	DRD134831
R003 R004	Same as R002	
R005	Res., 560,± 5%, ¼W, Carbon	DRD134771
R006 to R010	Same as R005	
R011	Res., 100,± 5%, ¼W, Carbon	DRD134591
R012	Same as R011	
R013	Res., 620, ± 5%, ¼W, Carbon	DRD134781
R014	Same as R002	
R015	Same as R011	
R016	Res., 1M, ± 1%, ¼W, Metal	DRE141551
R017	Res., 470k, ±1%, ¼W, Metal	DRE141471
R018	Res., 100, ± 5%, ¼W, Carbon	DRD144591
R019	Res., 10k, Var., 0.3W, Cermet	DRV411991
R020 to R025	Same as R011	
R026	Res., 150k, ± 5%, ¼W, Carbon	DRD135351
R027	Res., 330, ± 5%, ¼W, Carbon	DRD134711

CIRCUIT REFERENCE	DESCRIPTION	IWATSU PART NO.
R028	Res., 10k, ±5%, ¼W, Carbon	DRD135071
R029	Same as R028	
R030	Res., 120k, ±1%, ¼W, Metal	DRE131331
R031	Same as R030	
R032	Res., 3.3k, ±5%, ¼W, Carbon	DRD134951
R033	Res., 100k, Var., 0.3W, Cermet	DRV412131
R034	Res., 2k, ±5%, ¼W, Carbon	DRD130901
R035	Same as R011	
R036	Same as R034	
R037	Same as R011	
R038	Res., 22k, ±5%, ¼W, Carbon	DRD135151
R039	Same as R038	
R040 to R043	Same as R011	
R045	Res., 2.2k, ±1%, ¼W, Metal	DRE130911
R046	Same as R019	
R047	Same as R045	
R048	Res., 10k, Var., 0.3W, Cermet	DRV131441
R049	Same as R048	
R050	Same as R028	
R051	Same as R028	
R052	Res., 100k, ±5%, ¼W, Carbon	DRD135311
R053	Same as R052	
R054	Res., 22M, ±5%, ¼W, Metal	DRG330271
R055	Same as R028	
R056	Res., 3.9k, ±5%, ¼W, Carbon	DRD134971
R057 to R064	Same as R052	
R066	Res., 390, ±5%, ¼W, Carbon	DRD134731
R067	Res., 10k, ±5%, ¼W, Carbon	DRD135071
R068	Same as R011	
R069	Same as R011	
R070	Res., 240, ±5%, ¼W, Carbon	DRD134681
R071	Same as R019	
R072	Same as R027	
R073	Same as R027	
R074	Same as R067	
R075	Same as R056	
R076	Same as R067	
R077	Same as R002	
R078	Same as R052	
R080	Same as R034	

CIRCUIT REFERENCE	DESCRIPTION	IWATSU PART NO.
R082	Same as R034	
R083	Same as R067	
R084	Same as R011	
R085	Same as R011	
R086	Res., 4.7k, ±5%, ¼W, Carbon	DRD134991
R087	Same as R086	
R088	Res., 10, ±5%, ¼W, Carbon	DRD134351
R089	Same as R067	
R090	Same as R011	
R091	Res., 100, ±5%, ¼W, Carbon	DRD134591
R092	Same as R091	
R093	Same as R091	
R093A	Same as R011	
R301	Res., 330, ±5%, ¼W, Carbon	DRD134711
R302	Same as R301	
R303	Res., 500, Var., 0.5W, Cermet	DRV415161
R304	Res., 39k, ±1%, ¼W, Metal	DRE131211
R305	Res., 22, ±5%, ¼W, Carbon	DRD134671
R306	Same as R305	
R307	Same as R305	
R308	Res., 2.7k, ±5%, ¼W, Carbon	DRD134931
R309	Res., 1k, ±5%, ¼W, Carbon	DRD134831
R310	Res., 10k, ±5%, ¼W, Carbon	DRD135071
R311	Res., 2.2k, ±5%, ¼W, Carbon	DRD134911
D001 to D003	Diode, 1S4B1	DDD021011
D004	Diode, 1S953	DDD010051
D005 to D009	Diode, 1S1544A	DDD010801
D010	LED., TLR102	DDD070231
D011	Same as D010	
D012 to D027	Same as D004	
D028 to D031	Same as D005	
D301	Same as D004	
Q001	Transistor, 2SA711(S)	DTR115601
Q002	Transistor, 2SC1815-GR	DTR137781
Q003	Transistor, μPA61A	DTR295181

CIRCUIT REFERENCE	DESCRIPTION	IWATSU PART NO.
Q004 to Q007	Transistor, 2SC1834	DTR131031
Q301	Same as Q002	
I001 to I008	LED., TLR312	DDD070151
IC001	IC, μ PC14312H	DIC650031
IC002	IC, μ PC16305H	DIC650111
IC003	IC, μ PC14305H	DIC650021
IC004	IC, F10116DC	DIC310201
IC005	IC, SP8629	DIC190431
IC006	IC, TC5026BP	DIC490801
IC007	IC, TC810CP	DIC630731
IC008	IC, SN74LS04N	DIC140051
IC009	IC, SN74LS86N	DIC140871
IC010	IC, SN74S00N	DIC140011
IC011	IC, SN74LS107N	DIC141061
IC012	IC, CD4098BE	DIC424081
IC013	IC, SN74S00N	DIC170011
IC014	Same as IC007	
IC015	Same as IC007	
IC016	IC, SN74LS08N	DIC140091
IC017	IC, SN74LS54N	DIC140551
IC018	IC, SN74LS51N	DIC140521
IC019	IC, ICM7216BIPI	DIC190441
IC020	IC, CD4081BE	DIC410711
IC021	IC, CD4069BE	DIC410621
IC022	IC, SN74LS27N	DIC140281
IC023	Same as IC008	
IC301	Same as IC010	
IC302	Same as IC010	
IC303	Same as IC008	
IC304	Same as IC010	
IC305	Same as IC010	
IC306	IC, SN74LS122N	DIC141171
IC307	Same as IC011	
S001	Push switch, KSD2-4-10MLDC	DSW014171
S002	Push switch, KSD5-10-10MLDC	DSW014181
S003	Push switch, KSD6-14-10ILDC	DSW014191

CIRCUIT REFERENCE	DESCRIPTION	IWATSU PART NO.
J001	Connector, 128-03-10-2815	DCN032031
J002	Connector, M31-M87-12	DCN034541
J003	Connector, M33-M87-06	DCN034591
J004	Connector, M31-M87-07	DCN034501
J005	Same as J001	
J006	Same as J001	
J007	Connector, BNC080	DCN040711
J008	Connector, M36-M87-02	DCN034601
J009	Same as J008	
J0010	Same as J008	
J0011	Connector, M33-M87-04	DCN034571
J0012	Same as J008	
J0012A	Connector, M31-C8-4	DCN034951
J0013	Same as J012A	
J0014	Same as J008	
P001	Connector, 129-03-10-281P	DCN032021
P002	Connector, M33-07-30-134P	DCN034791
P003	Same as P001	
P004	Connector, M33-06-30-114P	DCN034681
P005	Connector, M33-12-30-114P	DCN034731
P301	Same as P005	
FB001	Resistors-array, AHR-121JB	DFB017151
X001	Crystal Osc., 10MHz	DHF010331
T001	Power Transformer, FS-334002	DCL213041
F001	Fuse, FSA-0.2	DFU020111
	Fuse Holder, S-N5053	DSK060141
PB001	PRINTED CIRCUIT BOARD COUNTER CONTROL	KPN196821
PB002	PRINTED CIRCUIT BOARD DISPLAY A	KPN197911
PB003	PRINTED CIRCUIT BOARD ALARM	KPN197811

DIGITAL MULTIMETER UNIT

CIRCUIT REFERENCE	DESCRIPTION	IWATSU PART NO.
1C101	Cap., 100μ, ± 20%, 16V, Elect.	DCE225041
1C102	Cap., 0.01μ, ± 10%, 50V, Poly.	DCF120231
1C103 to 1C105	Cap., 10μ, ± 20%, 50V, Elect.	DCE245061
1C106	Cap., 1000 μ, ± 20%, 16V, Elect.	DCE121001
1C107	Cap., 2.2 μ, ± 20%, 50V, Elect.	DCE244531
1C108	Cap., 0.022 μ, ±10%, 50V, Poly.	DCF120271
1C109	Cap., 0.047μ, ± 1%, 50V, Poly.	DCF120311
1C110	Same as 1C102	
1C111	Cap., 0.47μ, ± 10%, 63V, Poly.	DCF128311
1C112	Cap., 0.22μ, ± 10%, 250V, Poly.	DCF168071
1C113 to 1C115	Same as 1C102	
1C116	Cap., 0.047μ, ± 20%, 600V, Poly.	DCF171131
1C117	Cap., 0.1μ, ± 5%, 63V, Poly.	DCF128301
1C118	Cap., 470p, ± 5%, 50V, Cer.	DCC235301
1C119	Cap., 22p, ± 5%, 50V, Cer.	DCC232401
1C120	Same as 1C116	
1C121	Same as 1C111	
1C122	Same as 1C111	
1C123	Cap., 100p, ± 5%, 50V, Cer.	DCC234001
1C124	Same as 1C107	
1C125	Same as 1C107	
1C126 to 1C128	Same as 1C102	
1C132	Same as 1C111	
1L101	Filter Coil	DCL151171
1L102 to 1L106	Filter Coil	DCL151161
1R101	Res., 220, ± 2%, 1W, Metal	DRE153571
1R102	Res., 200k, Var., 0.5W, Cermet.	DRV410241
1R103	Res., 8.9M, ± 1%, ½W, Metal	DRE390531
1R104	Res., 900k, ±0.5%, ½W, Metal	DRE243781
1R105	Res., 90k, ±0.1%, ½W, Metal	DRE240121
1R106	Res., 9k, ± 0.1%, ½W, Metal	DRE240111
1R107	Res., 900, ±0.5%, ½W, Metal	DRE243821
1R108	Res., 90, ±0.25%, ¼W, Metal	DRE231411
1R109	Res., 9 ±0.25%, 1W, W.W.	DRJ229411
1R110	Res., 0.9,± 0.25%, 2W, W.W.	DRJ239421
1R111	Res., 0.1, ±1%, 5W, W. W.	DRJ269421
1R112	Res., 470k, ±1%, ½W, Metal	DRE141471
1R113	Res., 100k, ±1%, ½W, Metal	DRE141311
1R114	Res., 110, ± 1%, ¼W, Metal	DRE130601
1R117	Res., 68k, ± 1%, ¼W, Metal	DRE131271
1R118	Res., 10, ± 5%, ¼W, Carbon	DRD134351
1R119	Res., 4.7k, ±1%, ¼W, Metal	DRE130991
1R120	Res., 20k, ± 0.5%, ¼W, Metal	DRE233691
1R121	Res., 100, Var., 0.3W, Cermet	DRV412001
1R122	Res., 1.74k,± 0.5%, ¼W, Metal	DRE234471
1R123	Res., 470k, ± 5%, ¼W, Carbon	DRC135471
1R124	Res., 1M, ±1%, ½W, Metal	DRE141551
1R125	Same as 1R117	
1R126	Same as 1R118	
1R127	Same as 1R118	
1R128	Res., 100k, ±1%, ¼W, Metal	DRE131311
1R129	Same as 1R121	
1R131	Res., 3.3M, ± 5%, ¼W, Metal	DRG330171
1R132	Res., 510k, ± 5%, ¼W, Carbon	DRD135481
1R133	Res., 10M, ± 5%, ¼W, Metal	DRG330231
1R134	Res., 10k, ±1%, ¼W, Metal	DRE131071
1R135	Res., 10.7k,± 0.5%, ¼W, Metal	DRE234481
1R136	Res., 4.7k, ±1%, ¼W, Metal	DRE130991
1R137	Res., 500, Var., 0.3W, Cermet	DRV412021
1R138	Res., 150k, ± 5%, ¼W, Carbon	DRD135351
1R139	Same as 1R119	
1R140	Res., 2.4k, ± 5%, ¼W, Carbon	DRD134921
1R141	Res., 5.6k, ± 5%, ¼W, Carbon	DRD135011
1R142	Same as 1R141	
1R143	Same as 1R141	
1R144	Same as 1R140	
1R145	Same as 1R128	
1R146	Res., 22k, ±5%, ¼W, Carbon	DRD135151
1R147	Same as 1R137	
1R148	Res., 910, ± 1%, ¼W, Metal	DRE130821
1R149	Res., 100, ± 5%, ¼W, Carbon	DRD134591
1R150	Same as 1R149	
1D103	Diode, RD5.1EB	DDD030571
1D104	Diode, S2VB10	DDD022831
1D105	Diode, 1S953	DDD010051

CIRCUIT REFERENCE	DESCRIPTION	IWATSU PART NO.
1D106	Diode, 1S1544A	DDD010801
1D107	Same as 1D106	
1D108 to 1D110	Same as 1D105	
1D111	Same as 1D103	
1D115	Same as 1D105	
1D116	Same as 1D105	
1D117	Same as 1D106	
1D118	Same as 1D106	
1Q101	Transistor, 2SD612K	DTR145811
1Q102	Transistor, 2SC1815-GR	DTR137781
1IC101	IC, CP-3024	DES030321
1IC102	IC, ICL7660CPA	DIC641721
1IC103	IC, TL061CP	DIC613761
1IC104	IC, 7107CPL/ICL7107CPL	DIC641711
1IC105	IC, 9491BJ	DIC690141
1S101	Push-switch, KSD4-14-10MLDB	DSW014211
1S102	Push-switch, KSD6-30-10ILDB	DSW014201
1RL101	Relay, MZ-5HS	DKD026781
1RL102	Reed Relay, LR1A-05B	DKD060271
1J101	Connector, M31C8-4	DCN034951
1J102	Same as 1J101	
1P101	Connector, 129-03-10-281p	DCN032021

CIRCUIT REFERENCE	DESCRIPTION	IWATSU PART NO.
1FB101	Resistors-array, AHR-472JQ	DFB017161
1FB102	Same as 1FB101	
1FB103	Same as 1FB101	
1F101	Fuse, FSA-0.5	DFU020131
1F102	Fuse, FSA-2	DFU020151
1X101	Crystal Osc., KF-38P, 40kHz	DHF011821
1Z101	Surge Absorbor, DSA-222L	DFU065581
1Z102	Varistor, TNR102K005	DDD060291
1Z103	Same as 1Z103	
1Z104	Same as 1Z103	
1PB101	PRINTED CIRCUIT BOARD, 3.5DMM CONTROL	KPN196121
1PB103	PRINTED CIRCUIT BOARD, SHIELD BOARD	KPN197611
1PB104	Same as 1PB103	

CIRCUIT REFERENCE	DESCRIPTION	IWATSU PART NO.
DIGITAL MULTIMETER DISPLAY B		
2C129	Cap., 1000p, +80% ~ −20%, 1kV, Cer.	DCC162731
2C130	Same as 2C129	
2C131	Same as 2C129	
2R151	Res., 1k, ±1%, ¼W, Metal	DRE535491
2R152	Same as 2R151	
2R153	Res., 1k, 5%, ¼W, Carbon	DRD134831
2I101	LED., TLR313	DDD070221
2I102	Same as 2I101	
2I103	Same as 2I101	
2I104	LED., TLR314	DDD070341

CIRCUIT REFERENCE	DESCRIPTION	IWATSU PART NO.
2D112	LED., TLR102	DDD070231
2D113	Same as 2D112	
2D114	Same as 2D112	
2Z105	Varistor, TNR102K005	DDD060291
2PB102	PRINTED CIRCUIT BOARD, DISPLAY B	KPN197711

Section 9

Mechanical Parts List and Illustration

INDEX NO	NAME & DESCRIPTION	Q'ty	IWATSU PART NO
1	COVER, upper	1	KBA512931
2	COVER, lower	1	KBA513051
3	PANEL A, front	1	KPA141121
4	PANEL B, front	1	KPA141311
5	PANEL, rear		KCM059821
7	HANDLE, arm	2	KCM059431
8	HANDLE, bar	1	KMM198011
9	COVER, handle	1	KCM059731
10	COVER, handle arm	2	KCM059521
11	GEAR, stater	2	KCM059611
12	SPRING, handle arm	2	KSR012611
13	STOPPER, handle arm spring	2	KBA508121
14	FIXED METAL PLATE, stater gear	2	KBA512521
15	NAME PLATE B, serial number	1	ARA002711
16	NAME PLATE, line voltage range	1	KRA103621
17	FOOT, rubber, 16 ϕ	4	KGM007931
18	RH-3 x 10A	4	MSQ930223
19	N101220SR	1	KCM060811
20	A301540DGA	1	KCM060611
21	A471560DGA	1	KCM060521
22	TIMING PANEL	1	KPA142121
23	TIMING PANEL SUPPORT	1	KCM061811
24	N111230SRP	2	KCM060911
25	A301760DGA	2	KCM060711
26	PS KNOB	1	KCM066211
27	S181580DGA	4	KCM061001
28	PUSH BUTTON	2	KCM061611
29	MULTI-DIAL (electric part)		
30	K141360SGP	2	KCM061511
31	K141360SG	4	KCM061411
32	K101160	1	KCM061111
33	K101160SG	2	KCM061211
102	KD(+)3 x 18S	8	MKD130181
103	KP – 3 x 12S		MKP130121
105	KT – 2 X 4B		MKT220042
106	KT – 3 x 8B		MKT230082
108	KT – 3 12B		MKT230122
115	HL – 3 x 3		MHL130039
120	SW–3S		MSW130001
121	W–3S		MWW130001
122	NYLON W–2 (DM-7100)	6	KPL102411

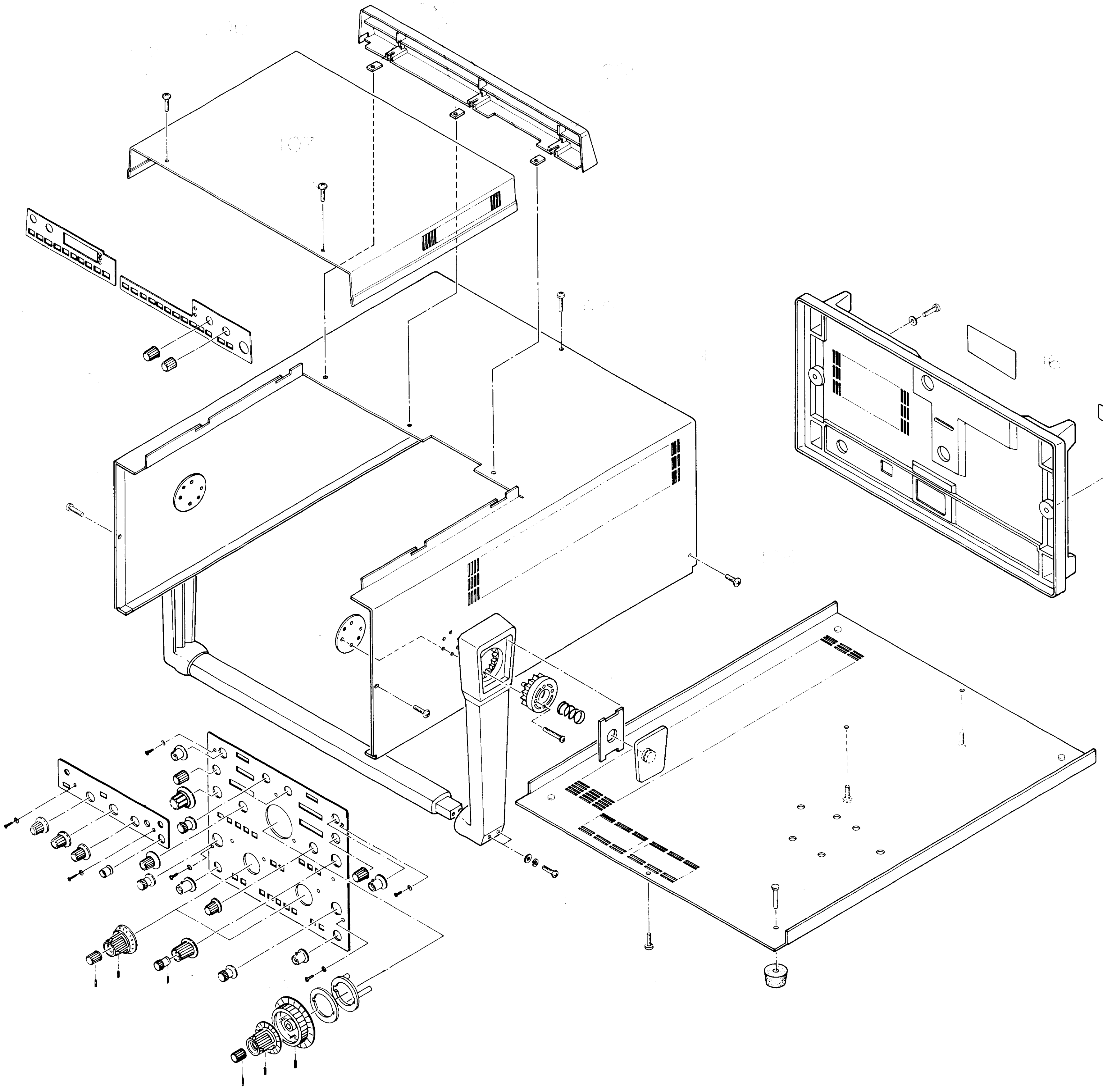

Figure 9-1

INDEX NO.	NAME AND DESCRIPTION	Q'ty	IWATSU PART NO.
31	COVER, panel		KCM059921
32	SUB PANEL, front	1	KPA141841
33	CHASSIS	1	KBA516061
34	FRAME	1	KBA513751
35	SUB PANEL, rear	1	KPA142251
36	CRT SHIELD PLATE	1	KBA516831
37	CASE, high voltage	1	KBA516921
38	SHIELD PLATE, CH2	1	KBA517431
39	SEAT PLAE, transformer	1	KBA516721
40	STOPPER, transistor	2	KBA516411
41	SILICON RUBBER, heat dissipater 25m/m		527510003
42	SEAT PLATE, CP	1	KBA526711
43	SEAT PLATE, line voltage selector	1	KBA526611
44	SEAT PLATE, INLET	1	KBA526511
45	PS KNOB CI, POWER	1	KCM061911
46	JOINT	1	KCM006621
47	ROD, power switch	1	KMM198311
48	INSULATE COUPLING 8-16	1	KCM006521
49	SPRING, ground	1	KBA520821
50	SPRING A, ground	1	KBA526011
51	GUIDE, printed circuit board 11633-1	3	MZT900381
52	BAND		MHK000961
64	BUSHING KG–024	1	MBU000501
77	CP OUTPUT TERMINAL	1	KPS009511
82	TERMINAL, CAL	1	DTA010871
100	KD (+) 3 x 6S		MKD130061
101	KD (+) 3 x 8S		MKD130081
110	SM1-3 x 6	20	MSM130061
111	SMI-3 x 8 CT		MSM130081
114	SM5-3 x 8		MSM530081
116	HL - 3 x 4S		MHL130049
117	KP (+) 3 x 10S		MKP130101
120	SW –3S		MSW130001
121	W –3S		MWW130001
123	WASHER, WS09 (1.5) 62BO	1	KMM199611
125	STAY, 9mm (Ganged with 33)	3	AMM627811
126	STAY, 18.5mm (Ganged with 33)	2	KMM198211

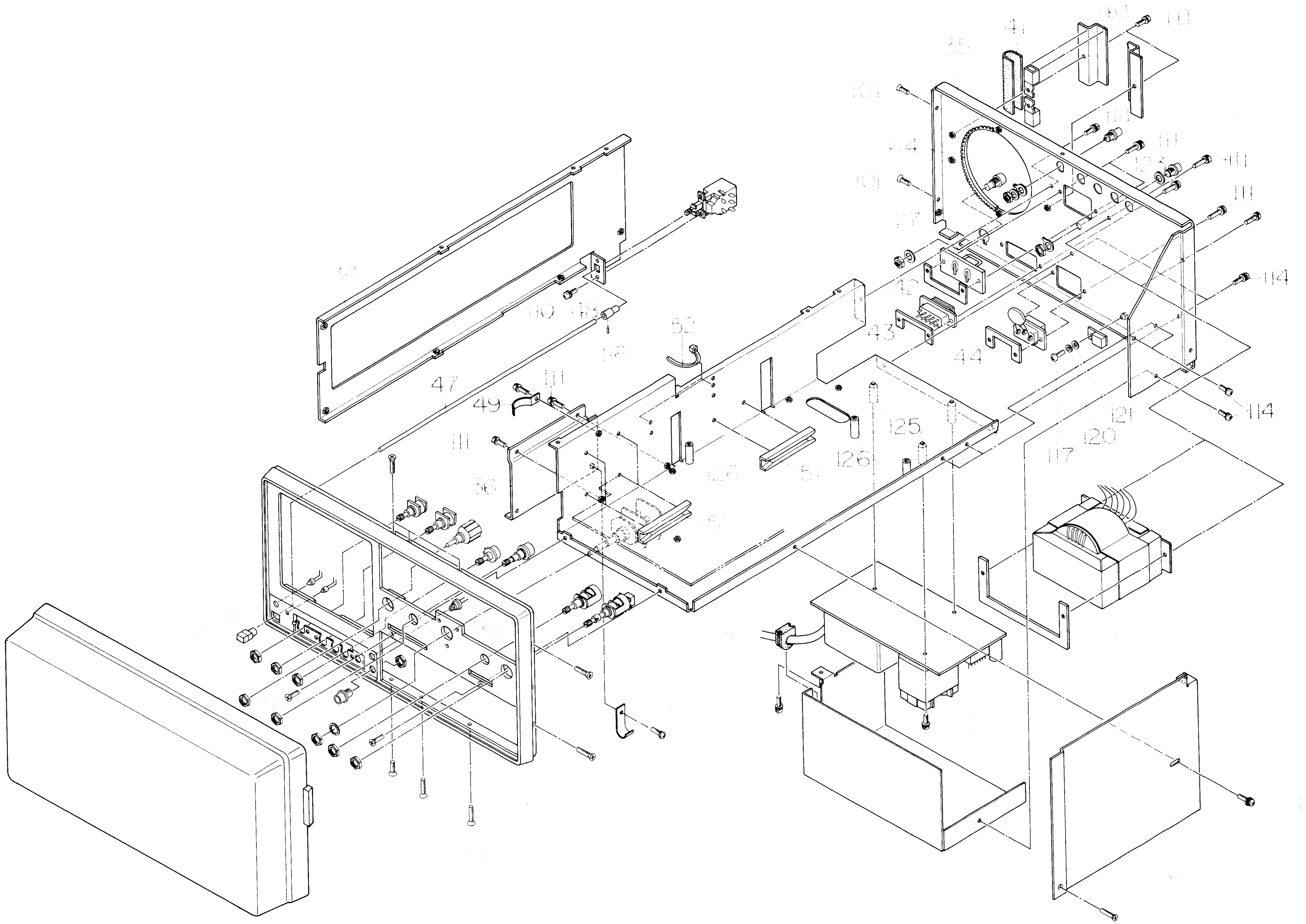
41
40
111
35
101
114
34
111
123
111
101
111
77
42
114
43
44
114
121
120
117
125
126
51
52
110
48
116
47
49
111
111
36

Figure 9-2

INDEX NO.	NAME AND DESCRIPTION	Q'ty	IWATSU PART NO.
55	LUG 10.2 ϕ	2	KPS004311
56	SUB PANEL, H	1	KPA141931
57	SUB PANEL, V	1	KPA142721
58	ATT SHIELD PLATE A	1	KBA525621
59	ATT SHIELD PLATE B	1	KBA525721
60	SHIELD PLATE	1	KBA517361
61	PCB ATTACHMENT BOARD, power supply	1	KBA529711
62	STAY D, screw	1	KMM200711
63	STAY B, screw	7	KMM198721
78	PS KNOB D1	36	KCM062001
79	PS KNOB D2	2	KCM062111
100	KD (+) 3 x 6S		MKD130061
101	KD (+) 3 x 8S		MKD130081
109	SM1–2.6 x 6CT		MSM126061
110	SM1 –3 x 6	20	MSM130061
112	SM1 –3 x 12CT	10	MSM130121
113	SM5 –3 x 6	50	MSM530061
114	SM5 –3 x 8		MSM530081
119	KP (+) 3 x 14S		MKP130141
120	SW–3S		MSW130001
124	W–3S		MWW130001

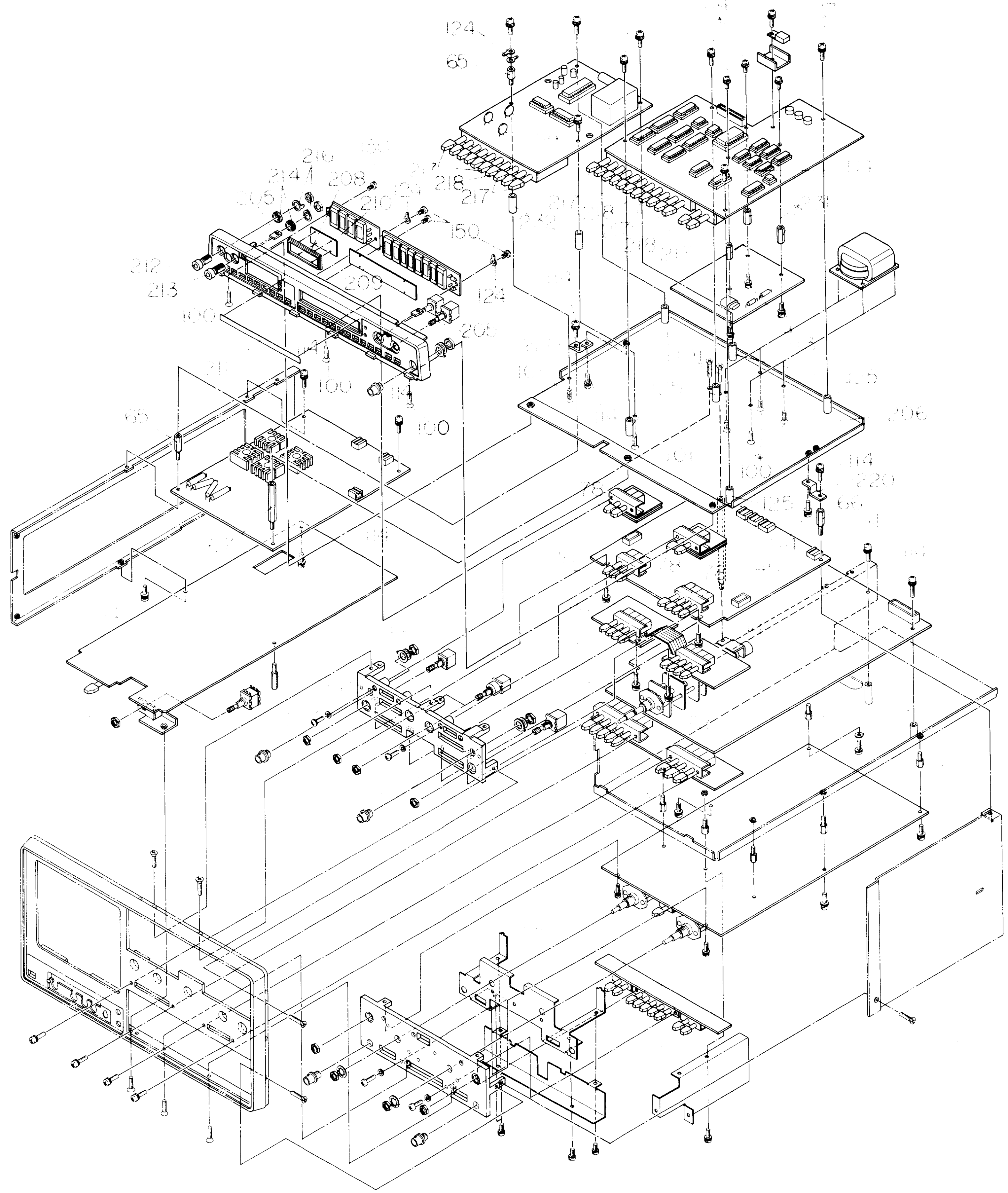
124
65
216
214
208
205
210
218
217
150
212
213
209
124
100
205
114
100
65
100
206
101
114
100
220
125
66

Figure 9-3

Figure 9-4

INDEX NO.	NAME AND DESCRIPTION	Q'ty	IWATSU PART NO.
52	BAND, CU-70		MHK000961
65	BEZEL B2	1	KCM060321
66	FILTER FRAME B2, BEZEL b2	1	KCM060411
67	FILTER APLATE B	1	KPL014811
68	STOPPER, filter	1	KPL013411
69	CUSHION, CRT	1	KGM009631
70	B (SS-5421)	1	KCM056111
71	SHIELD CASE A	1	KBA513221
72	SHIELD CASE B	1	KBA517211
73	SUSPENSION A, CRT shielded case A and B	2	KBA513421
74	SUSPENSION B, CRT shielded case A and B	1	KBA513521
75	CRT FIX BAND	1	KBA513621
76	CRT FIX RUBBER	1	KGM009511
77	NAME PLATE, title, SS-5710	1	KRA103521
104	KP (+) 3 x 25S	1	MKP130251
107	KT (+) 3 x 10B		MKT230102
111	SM1–3 x 8CT		MSM130081
113	SM5 –3 x 6	50	MSM530061
114	SM5–3x 8		MSM530081
120	SW–3S		MSW130001

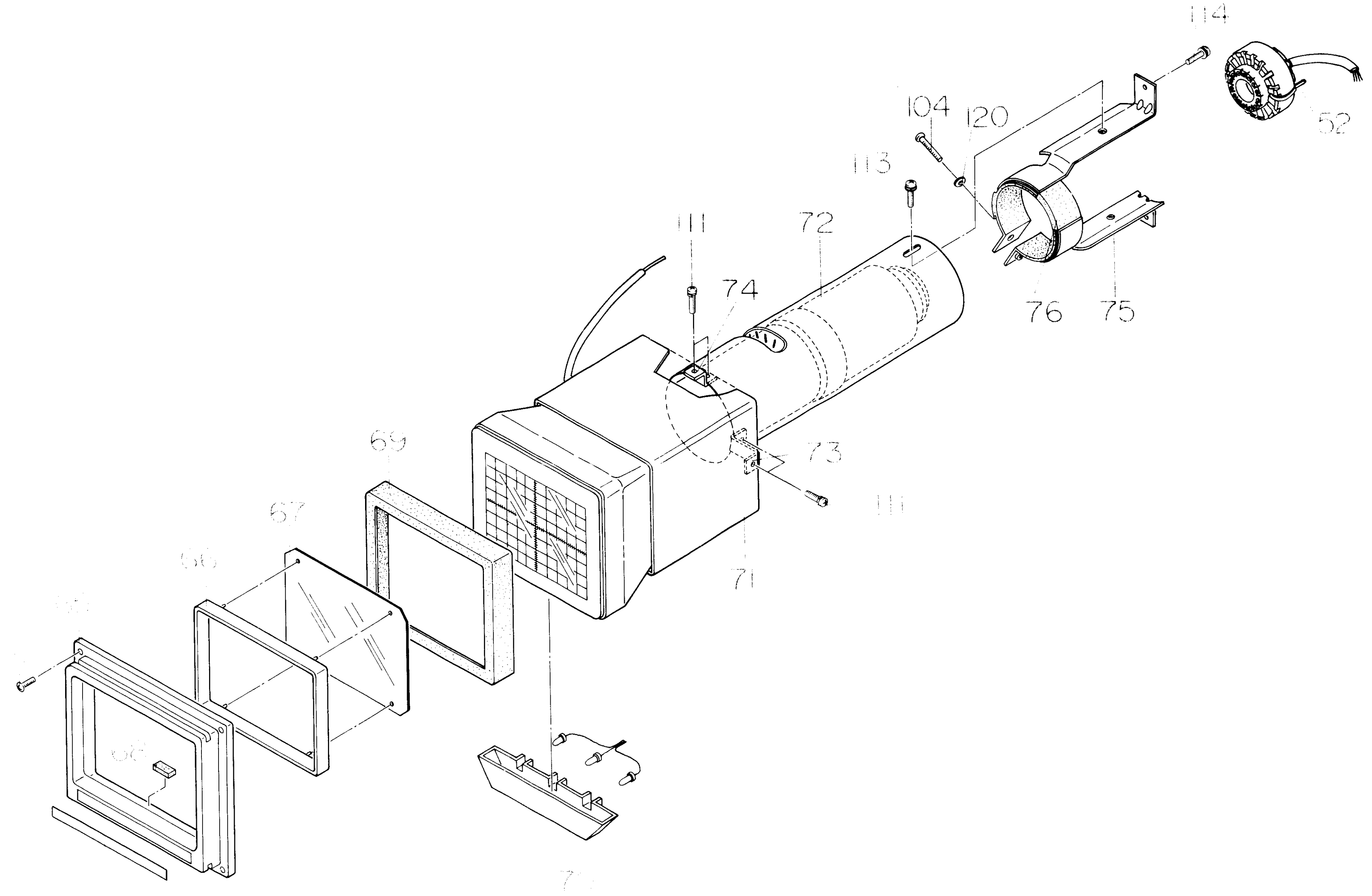

Figure 9-4