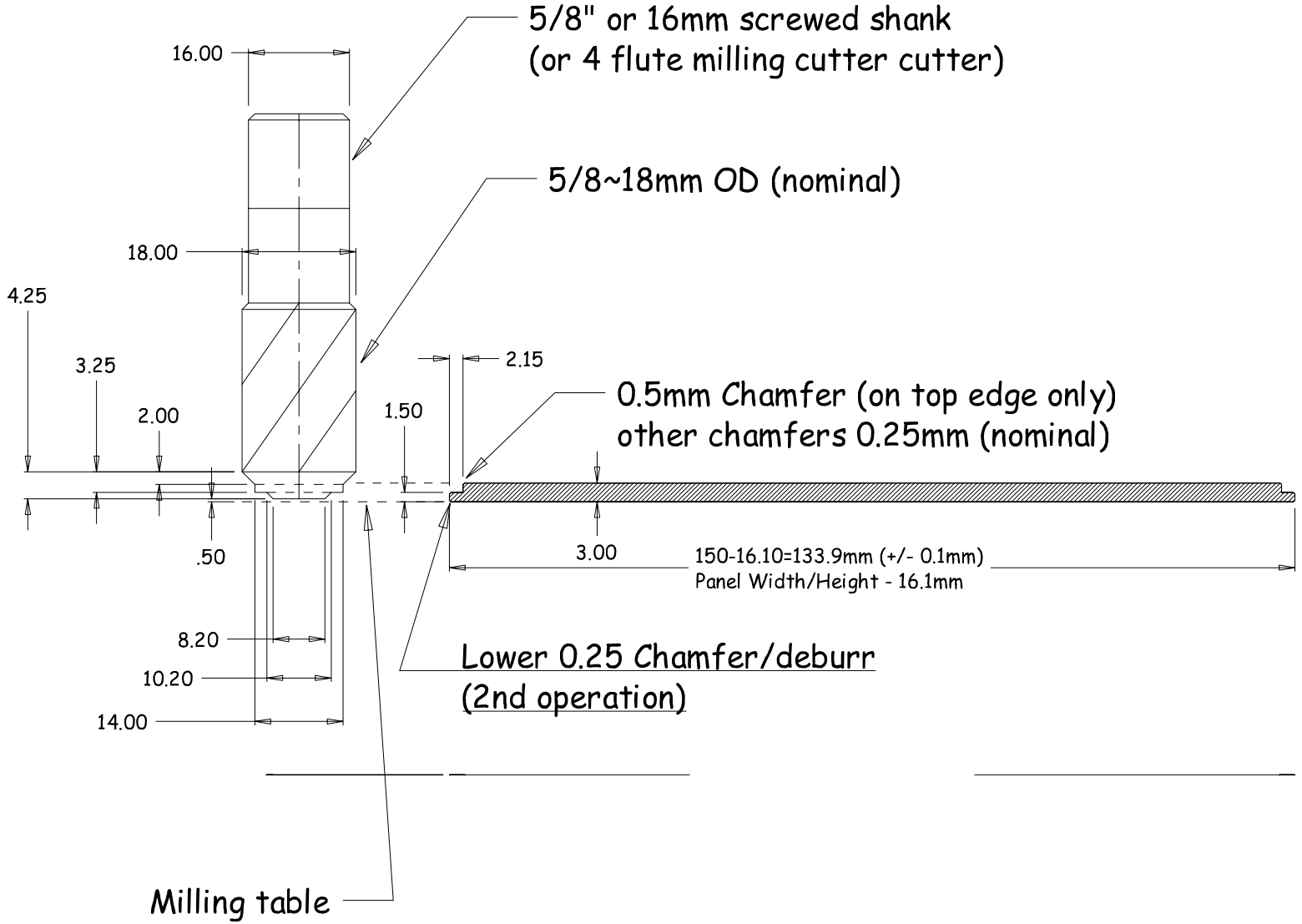

MATERIAL	Tool Steel
ALLOY	HSS or Carbide
EST. AREA	xxx mm
EST. WEIGHT	xxx kg/m
EST. PERIPHERY	EXT: xxx mm TOT: xxx mm

TOLERANCE

0.00mm ±0.1mm
00.0mm ±0.25mm
0000mm ±0.5mm
0-600mm ±0.1mm
> 600mm ±0.5mm

BS1474:1987 APPLIES UNLESS OTHERWISE SPECIFIED

JOB No.
AWD

CASA Modular Systems
P.O. BOX 38-828, WELLINGTON, NEW ZEALAND
TELEPHONE : (64-4) 5687 277
FACSIMILE : (64-4) 5685 161

CUSTOMER : CASA Modular Systems				SIZE	DRAWING Reference No.	ISSUE
DESCRIPTION : Chamfer + Rebate Milling Cutter 3mm Alloy				A4	CUT-REBATE	A
DRAWN : A.W.D	DATE : 06/11/07	APPROVED : ?	DWG. SCALE : 1:1			

© COPYRIGHT : CASA Modular Systems
ALL RIGHTS RESERVED