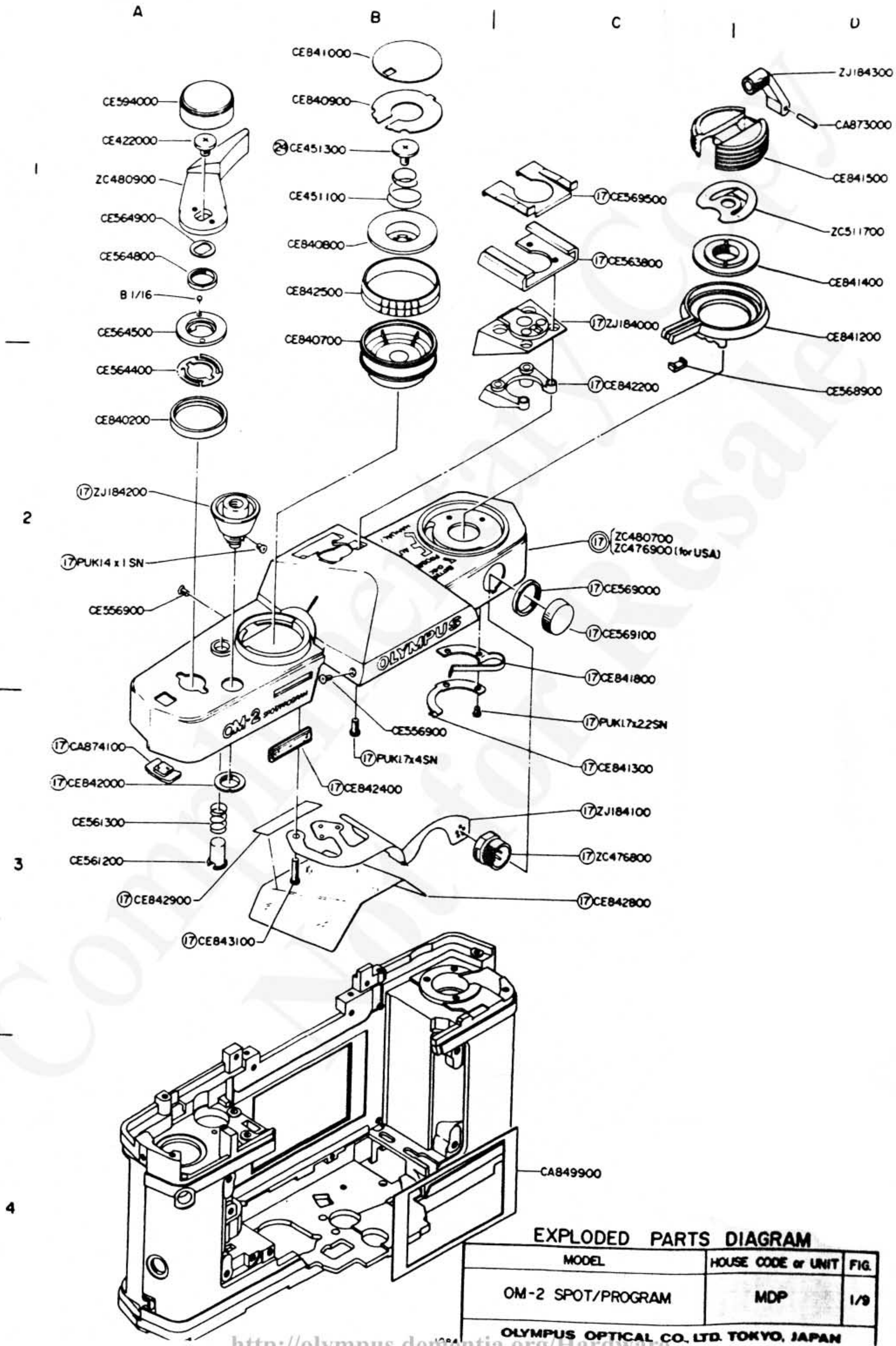

EXPLODED PARTS DIAGRAM

MODEL	HOUSE CODE or UNIT	FIG.
OM-2 SPOT/PROGRAM	MDP	1/9

OLYMPUS OPTICAL CO., LTD. TOKYO, JAPAN

http://olympus.dementia.org/Hardware

A B C D

1 2 3 4

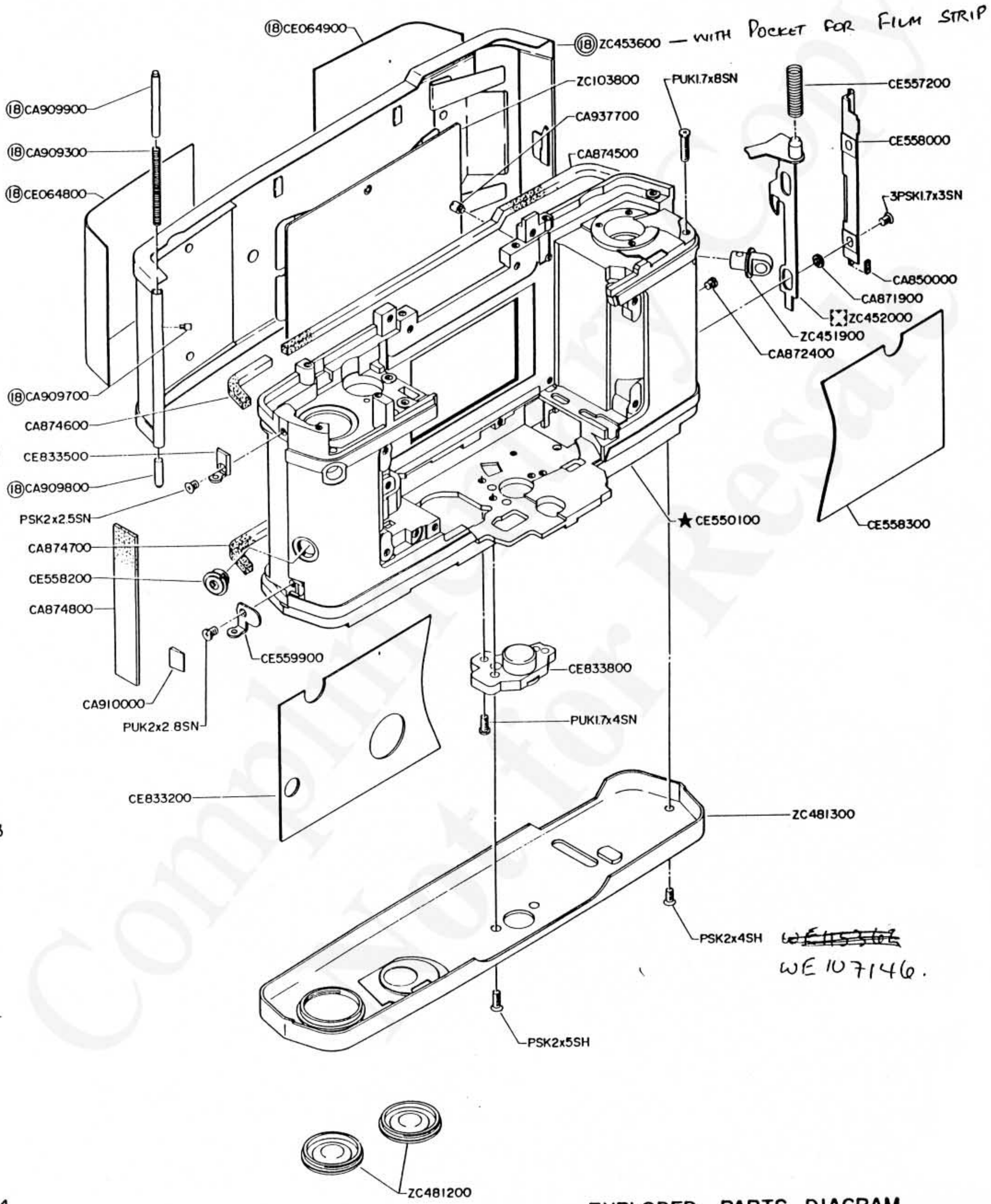

EXPLODED PARTS DIAGRAM

MODEL	HOUSE CODE or UNIT	FIG.
OM-2 SPOT/PROGRAM	MDP	2/9
OLYMPUS OPTICAL CO., LTD. TOKYO, JAPAN		

1084

http://olympus.dementia.org/Hardware

A B C D

1

2

3

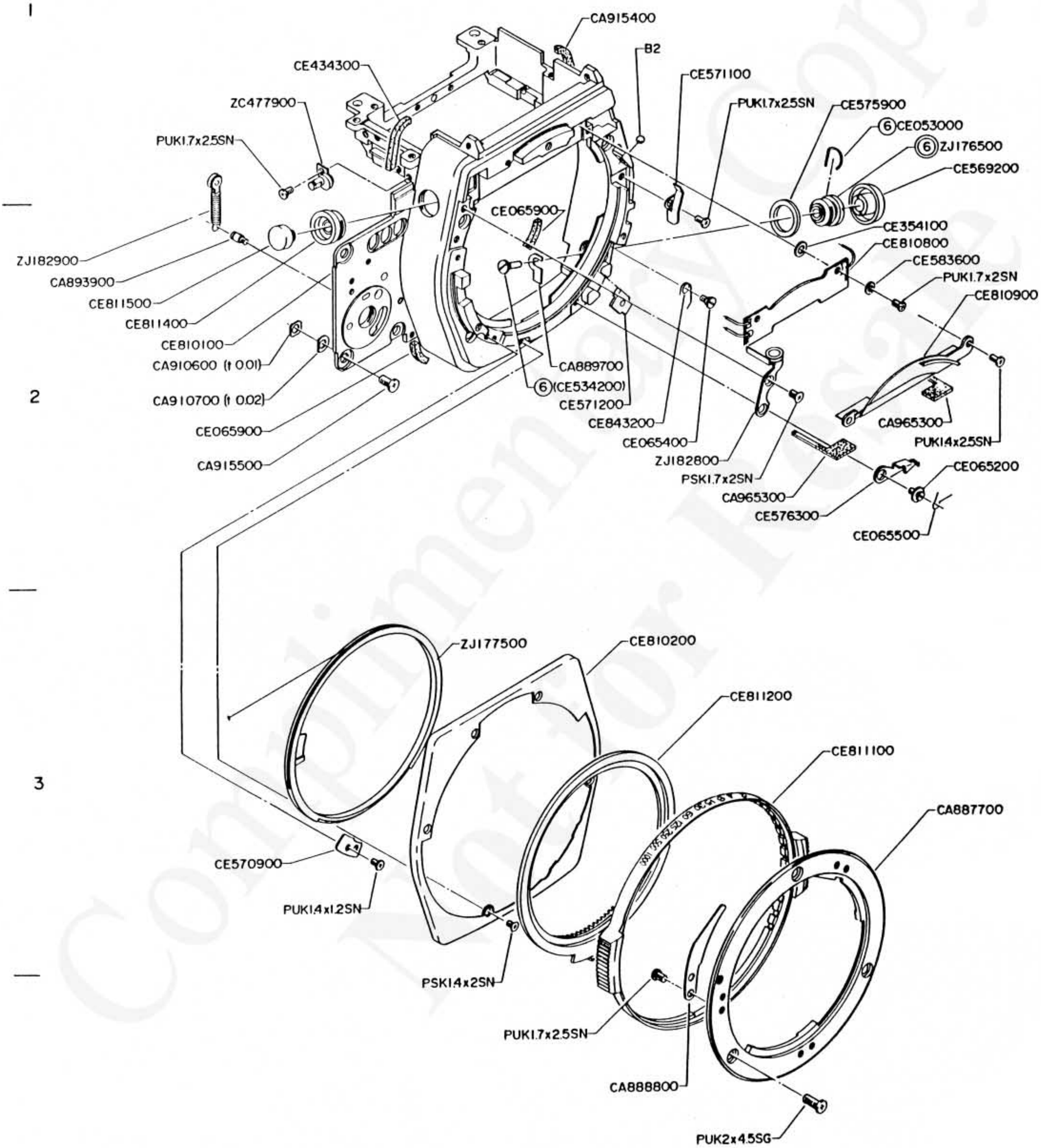

4

EXPLODED PARTS DIAGRAM

MODEL	HOUSE CODE or UNIT	FIG.
OM-2 SPOT/PROGRAM	MDP	3/9
OLYMPUS OPTICAL CO., LTD. TOKYO, JAPAN		

1084

Copyright Not for Resale
http://olympus.dementia.org/Hardware

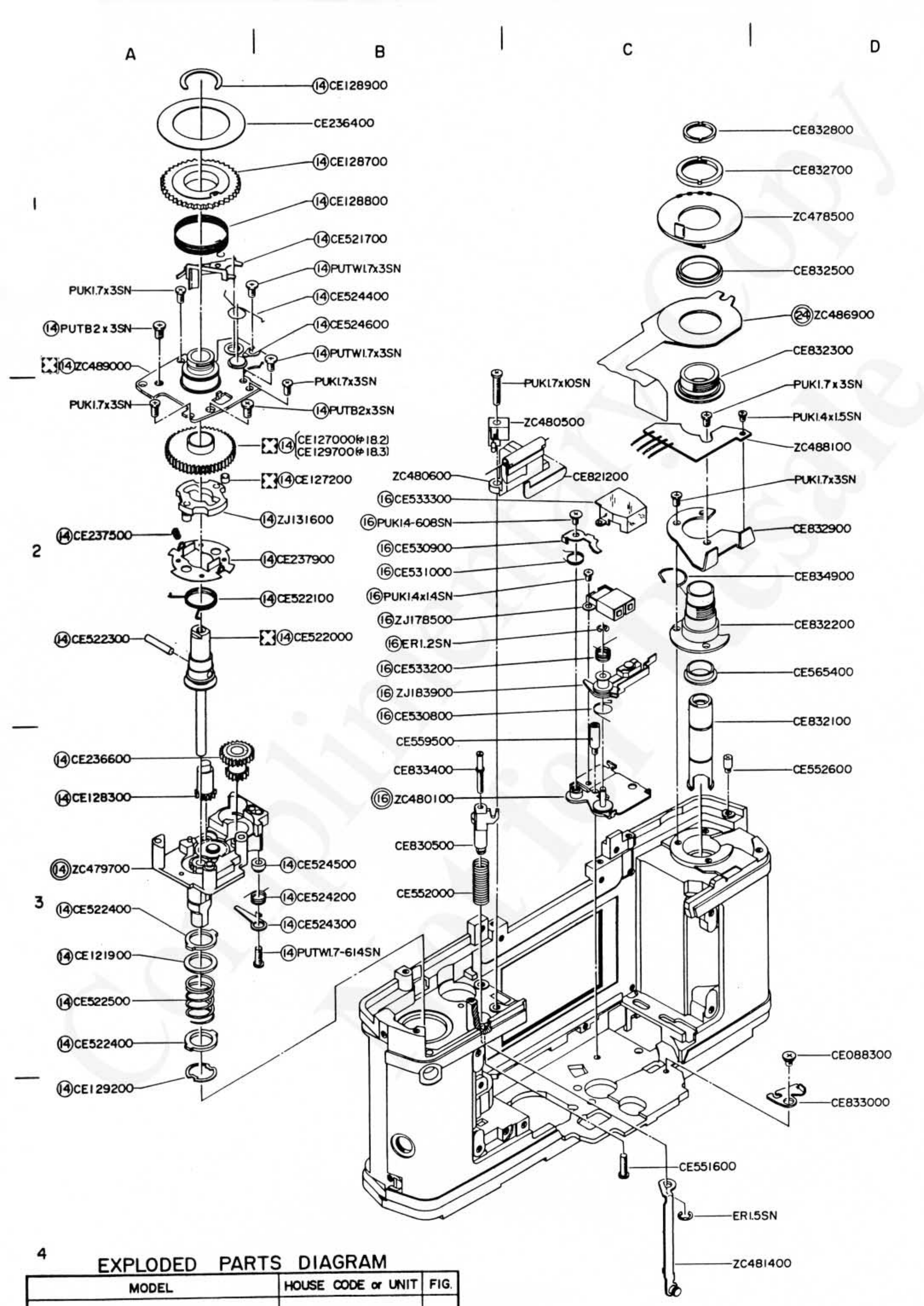

EXPLODED PARTS DIAGRAM

MODEL	HOUSE CODE or UNIT	FIG.
OM-2 SPOT/PROGRAM	MDP	4/9
OLYMPUS OPTICAL CO., LTD. TOKYO, JAPAN		

0587

http://olympus.dementia.org/Hardware

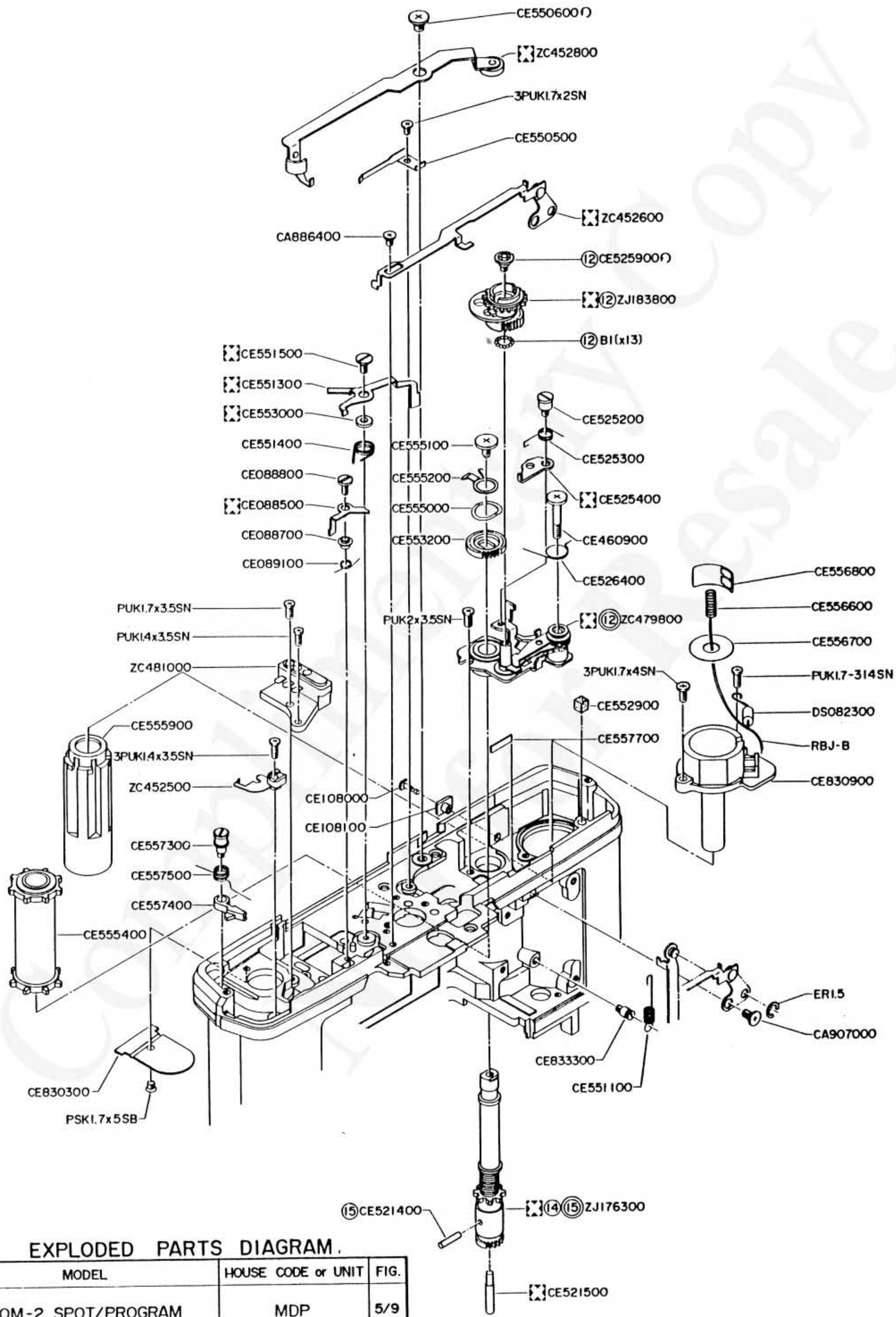

EXPLODED PARTS DIAGRAM.

MODEL	HOUSE CODE or UNIT	FIG.
OM-2 SPOT/PROGRAM	MDP	5/9
OLYMPUS OPTICAL CO., LTD. TOKYO, JAPAN		

1084

http://olympusdementia.org/Hardware

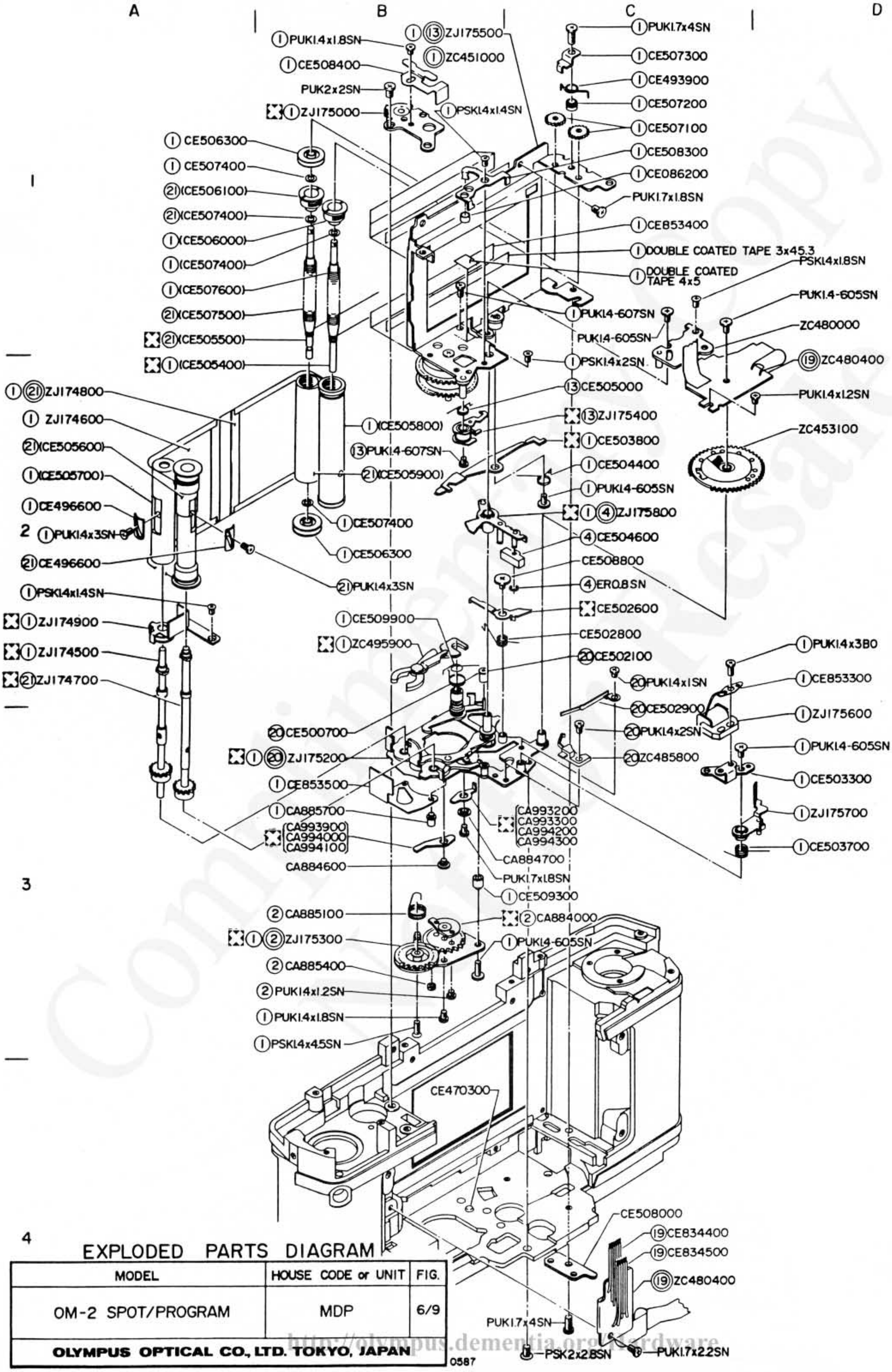

EXPLODED PARTS DIAGRAM

MODEL	HOUSE CODE or UNIT	FIG.
OM-2 SPOT/PROGRAM	MDP	6/9
OLYMPUS OPTICAL CO., LTD. TOKYO, JAPAN		

0587

http://olympus.dementia.org/Hardware

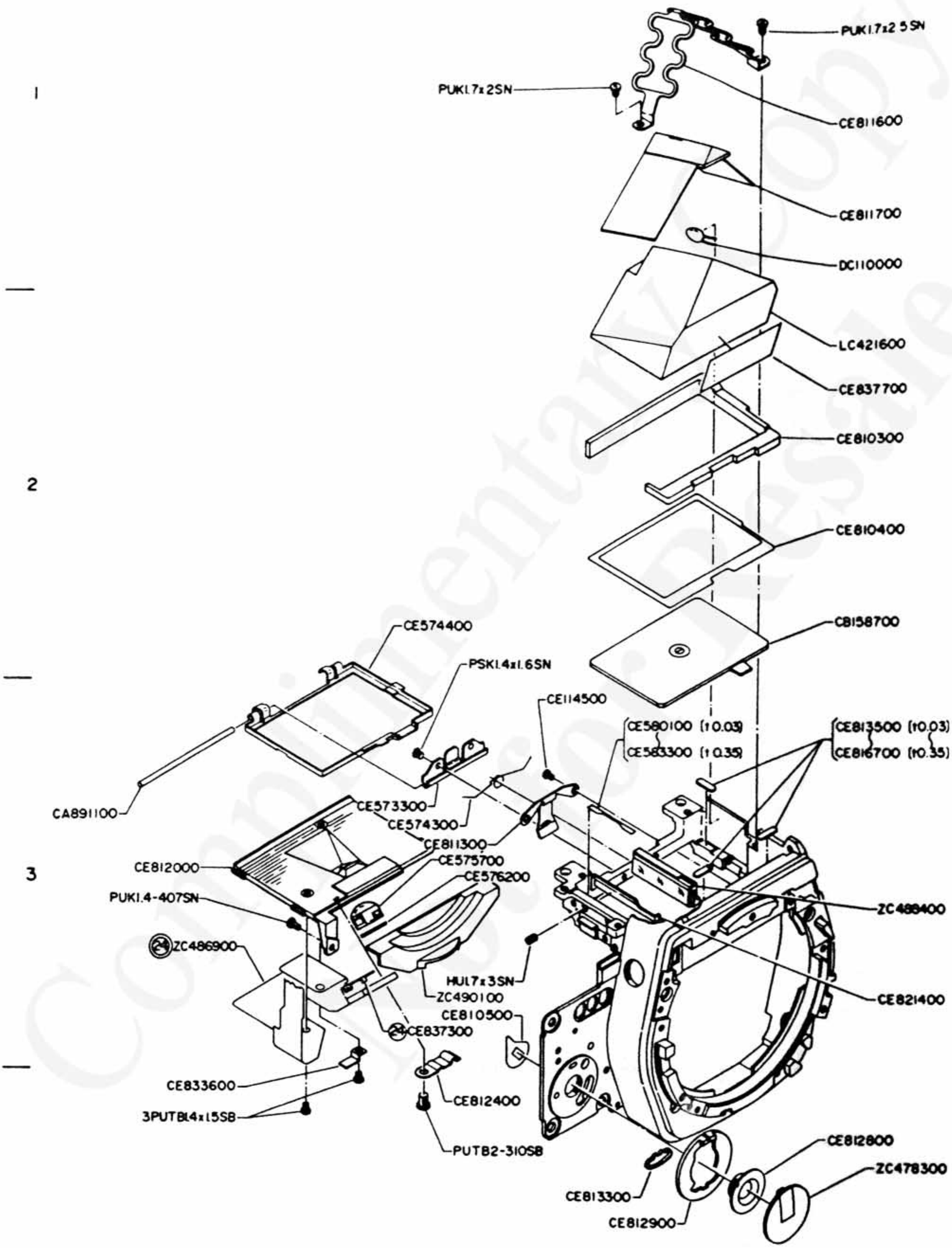

EXPLODED PARTS DIAGRAM

MODEL	HOUSE CODE or UNIT	FIG.
OM-2 SPOT/PROGRAM	MDP	7/9
OLYMPUS OPTICAL CO., LTD. TOKYO, JAPAN		

http://olympus.dementia.org/Hardware

1084

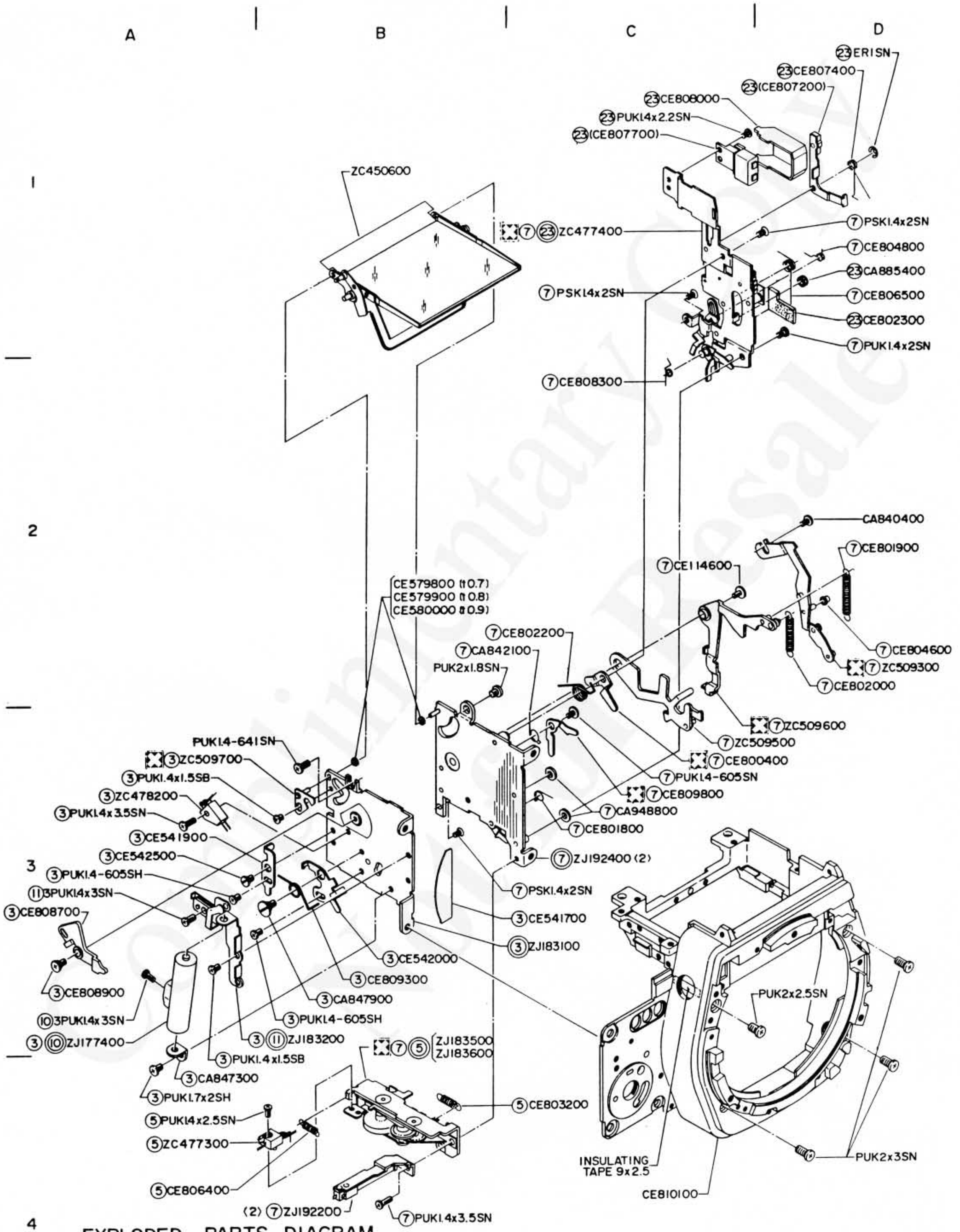

EXPLODED PARTS DIAGRAM

MODEL	HOUSE CODE or UNIT	FIG.
OM-2 SPOT/PROGRAM	MDP	8/9

OLYMPUS OPTICAL CO., LTD. TOKYO, JAPAN

0587

http://olympus.dementia.org/Hardware

A B C D

1

2

3

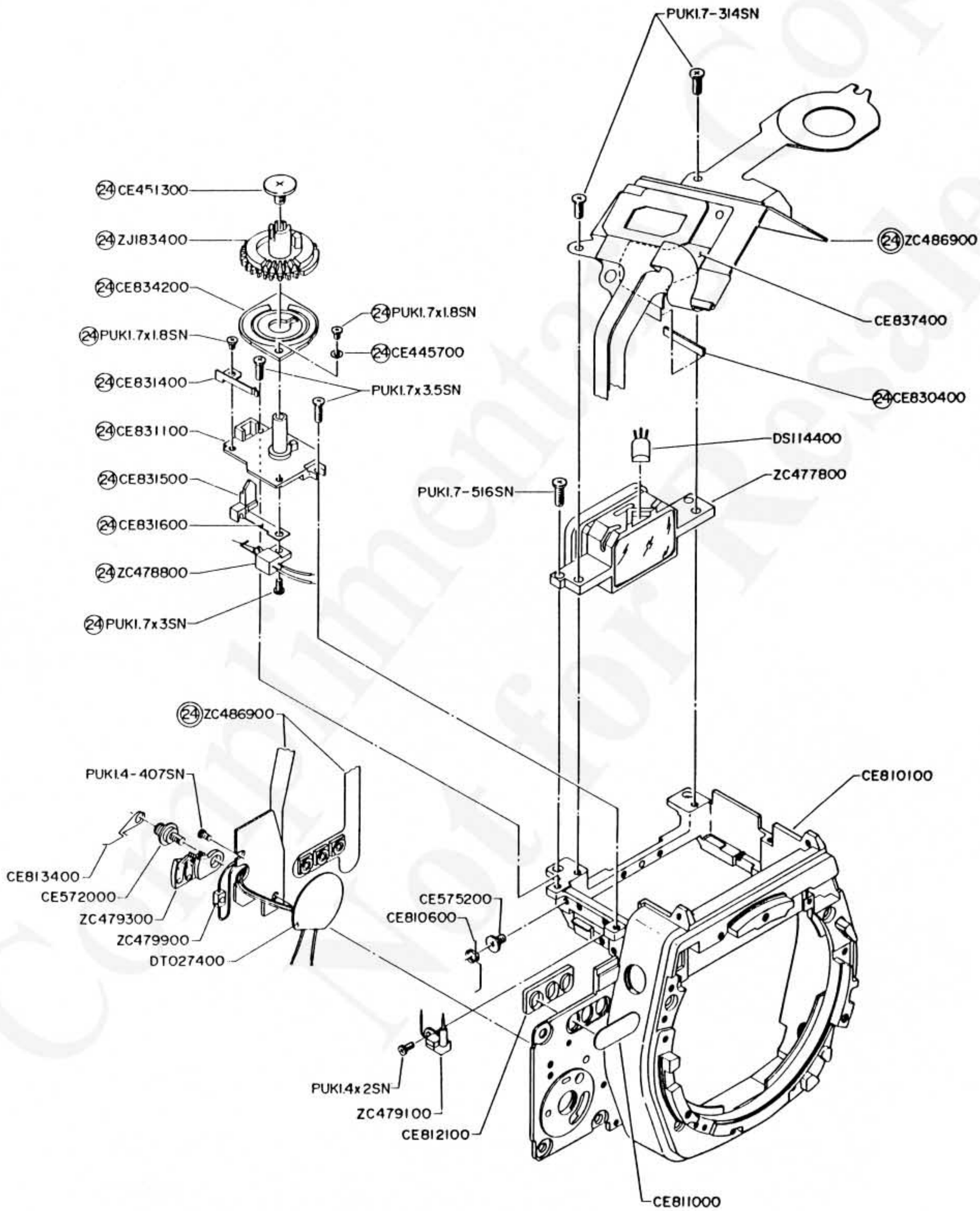

4

EXPLODED PARTS DIAGRAM

MODEL	HOUSE CODE or UNIT	FIG.
OM-2 SPOT/PROGRAM	MDP	9/9
OLYMPUS OPTICAL CO., LTD. TOKYO, JAPAN		

1084

http://olympus.dementia.org/Hardware