ERICSSON

CIRCUIT DIAGRAM

EKA/K/DKU HEA	EKA/K/DKU	1911-ROA117474 Ux
EKA/K/TMKC 9012		21-Dec-90 A
KRETSKORT STYRKORT EEM/RBS		PRINTED CIRCUIT ASSEMBLY CONTROLBOARD EEM/RBS

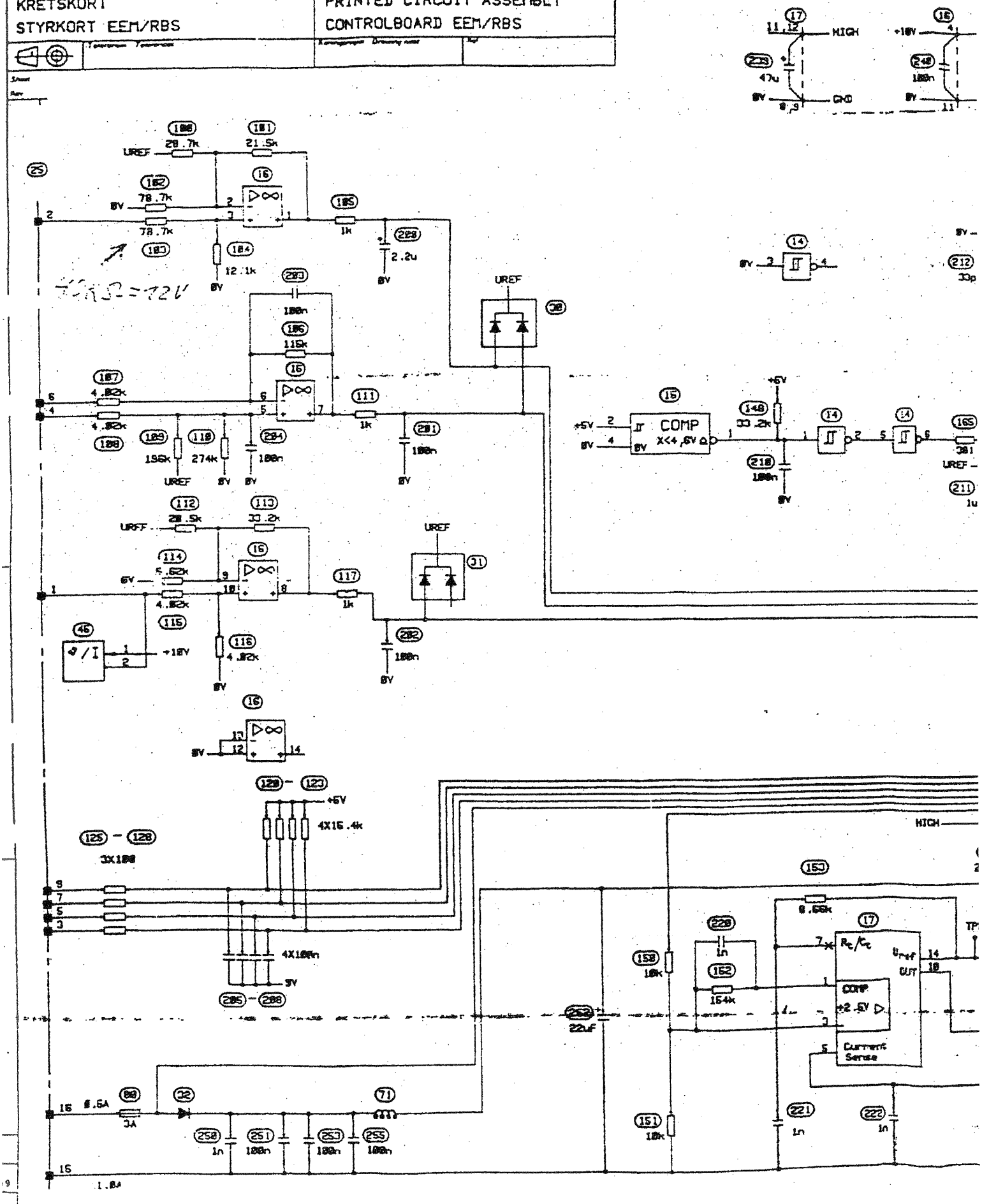

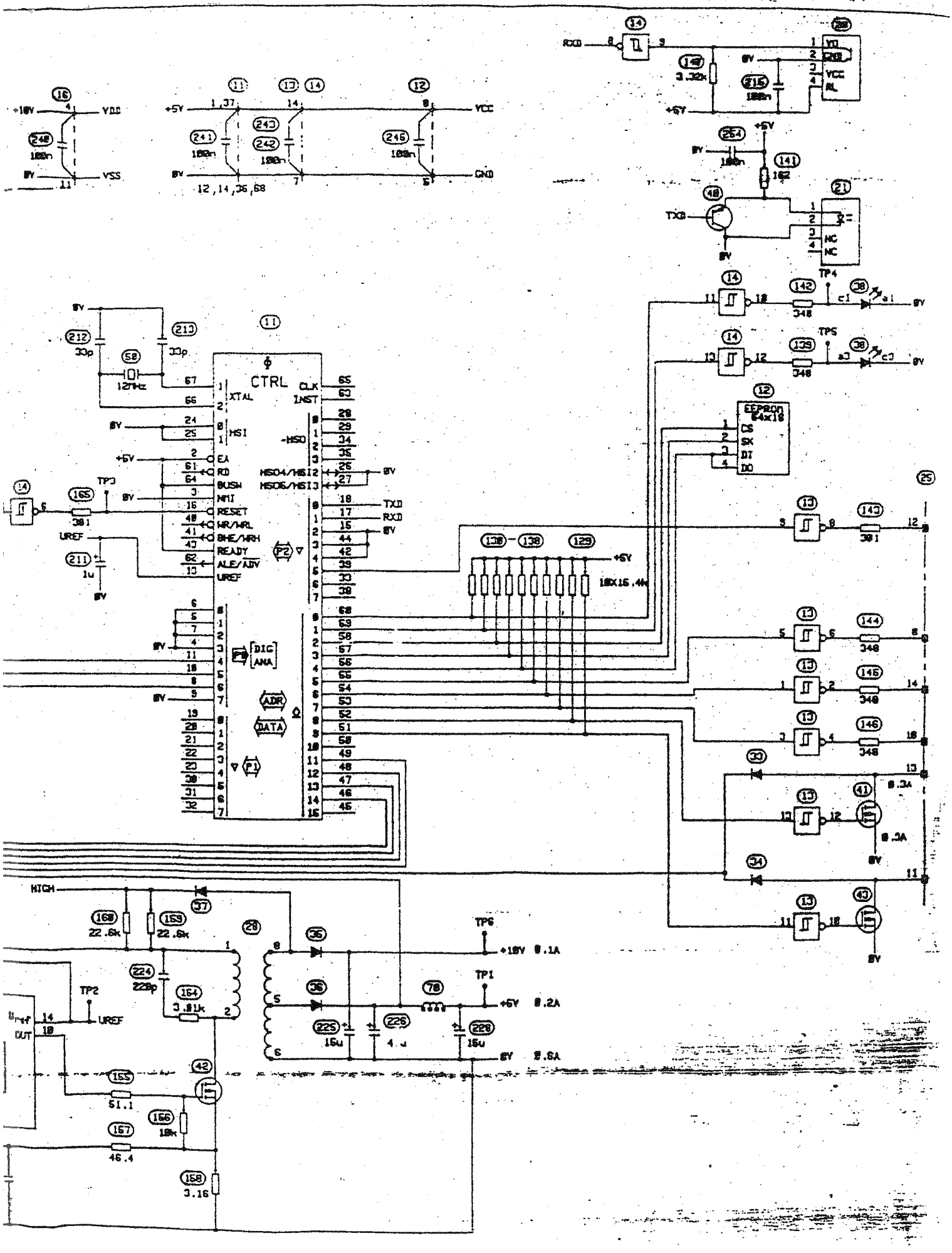
CTRL
XTAL
CLK
INST
HSI
HSO
EA
RD
BUSW
NMI
RESET
WR/WRL
BHE/WRH
READY
ALE/ADV
UREF
HSO4/HSI2
HSO6/HSI3
TXD
RXD
P3
DIG
ANA
ADR
DATA
P2
P1
EEPROM
64x16
CS
SK
DI
DO
VDD
VSS
VCC
GND
NC
TP1
TP2
TP3
TP4
TP5
TP6
+18V 0.1A
+5V 0.2A
0V 0.6A
HIGH
127kHz
12,14,36,68

2

RICSSON

KRETSSCHEMA
CIRCUIT DIAGRAM

KA/K/DLL ROJ EKA/K/DLL	1911-BML435002/1 Ux	
KA/K/DAT	See Below	1911-BML435002/0
KRETSKORT	PRINTED CIRCUIT ASSEMBLY	
Likriktare	Rectifier	
		BZZ 207 01

SINGLE POSRING IS ON ROA117494/1
DOUBLE POSRING IS ON BML435002/1

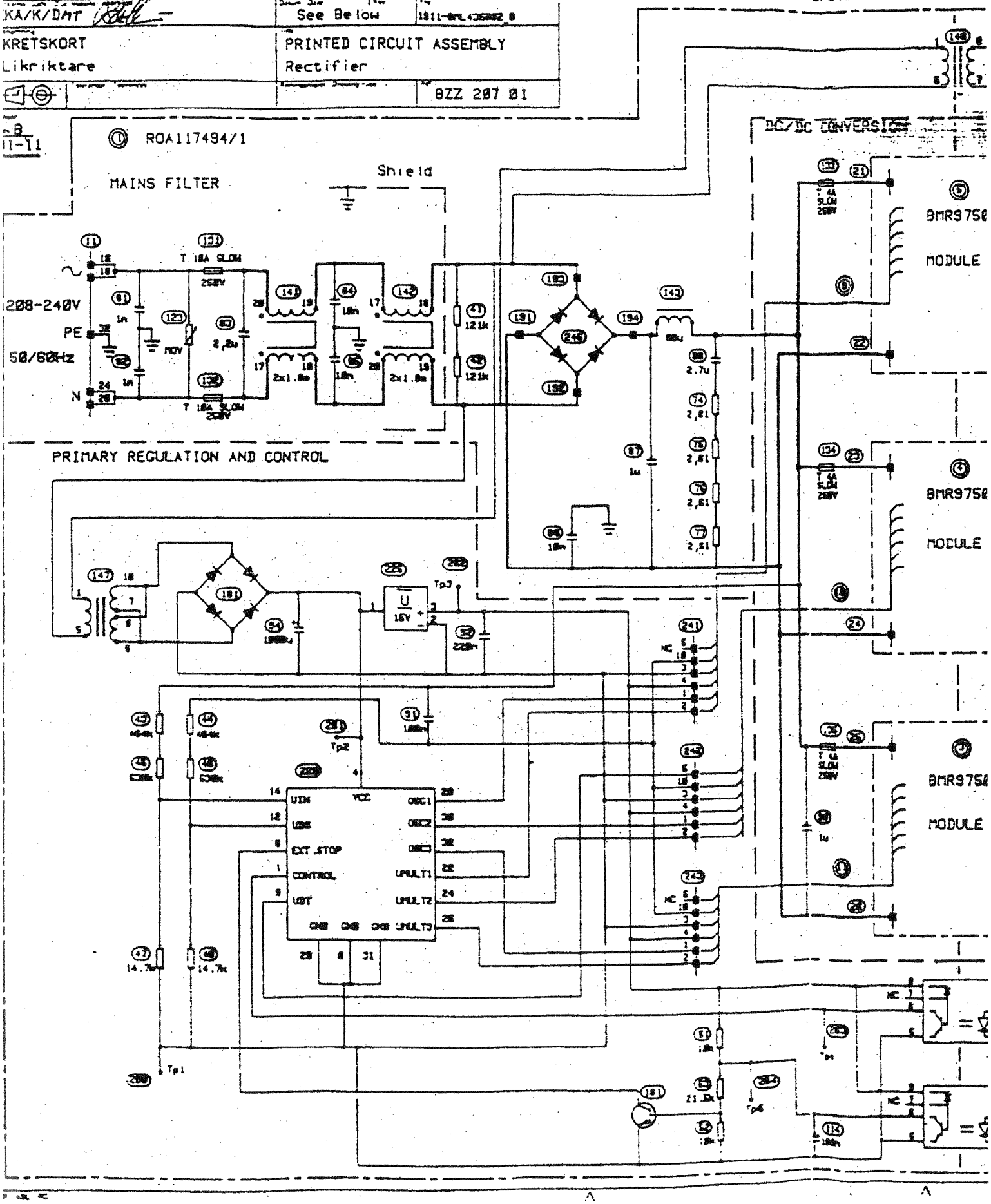

3

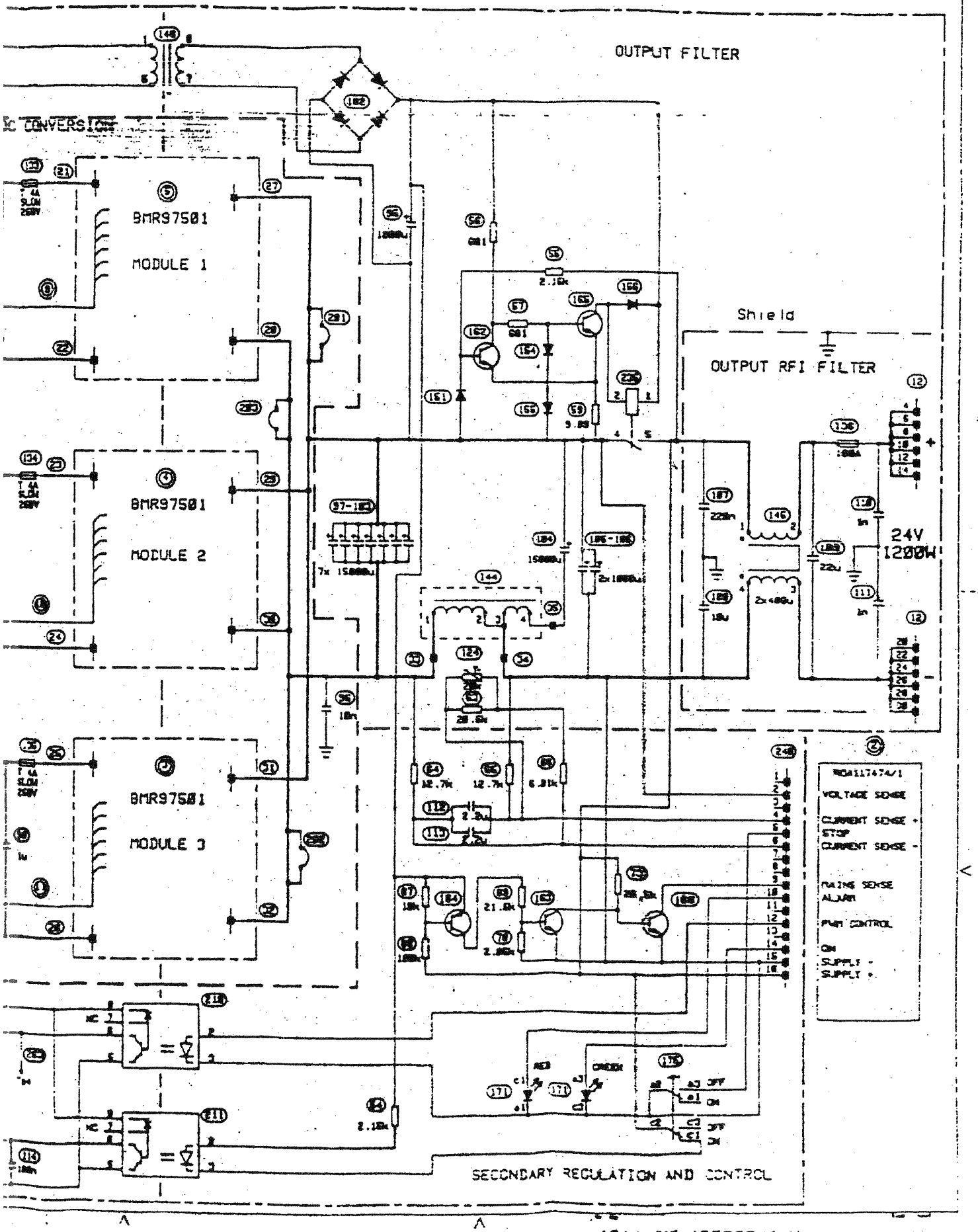
ROA117494/1
3ML405002/1
OUTPUT FILTER
DC CONVERSION
BMR97501
MODULE 1
BMR97501
MODULE 2
BMR97501
MODULE 3
Shield
OUTPUT RFI FILTER
24V
1200W
ROA117474/1
VOLTAGE SENSE
CURRENT SENSE +
STOP
CURRENT SENSE -
MAINS SENSE
ALARM
PWM CONTROL
ON
SUPPLY -
SUPPLY +
SECONDARY REGULATION AND CONTROL
1911-3ML405202/1 Dx

4

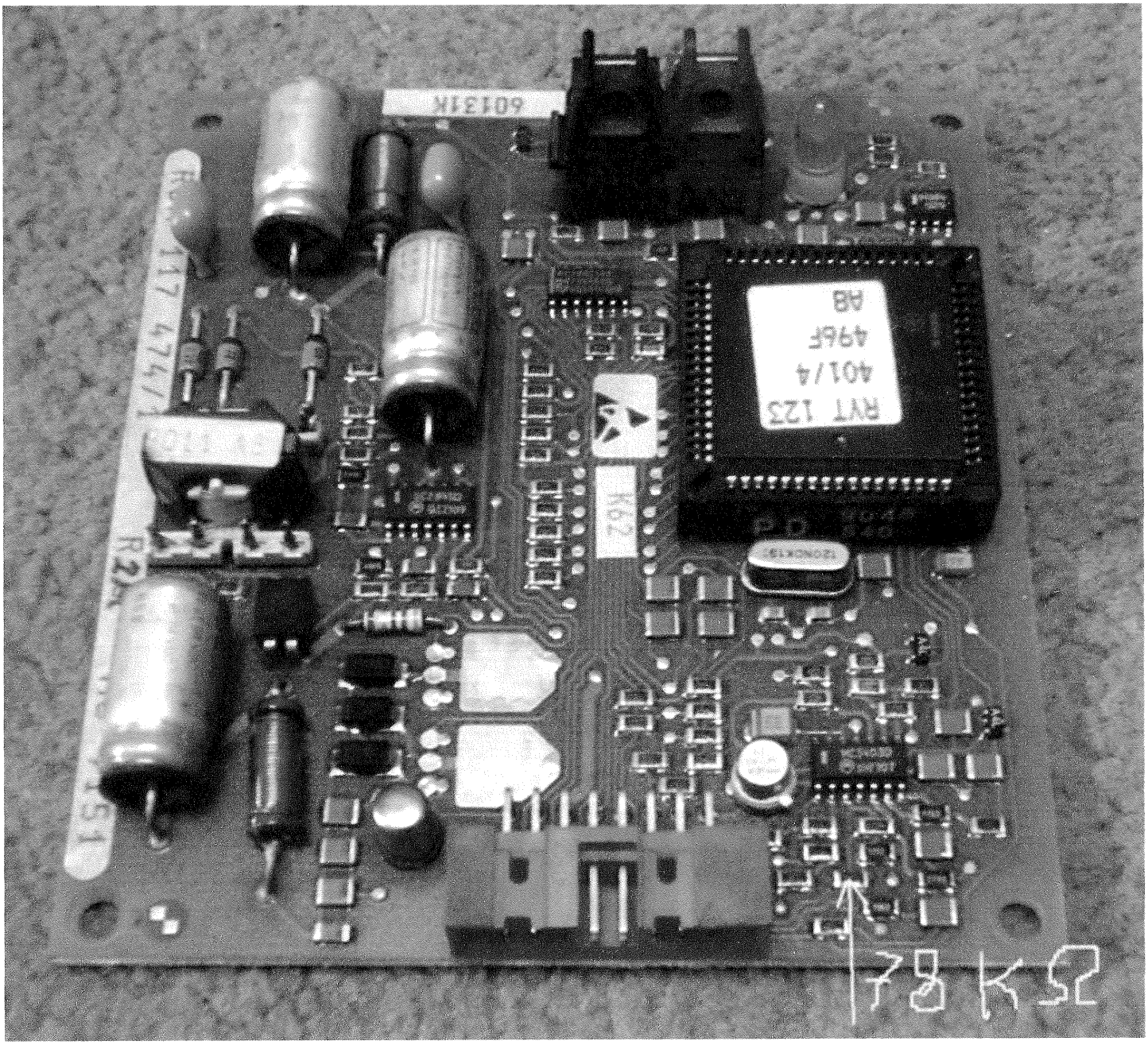
78 K52
RVT 123
401/4
49GF
AB
R62
601311