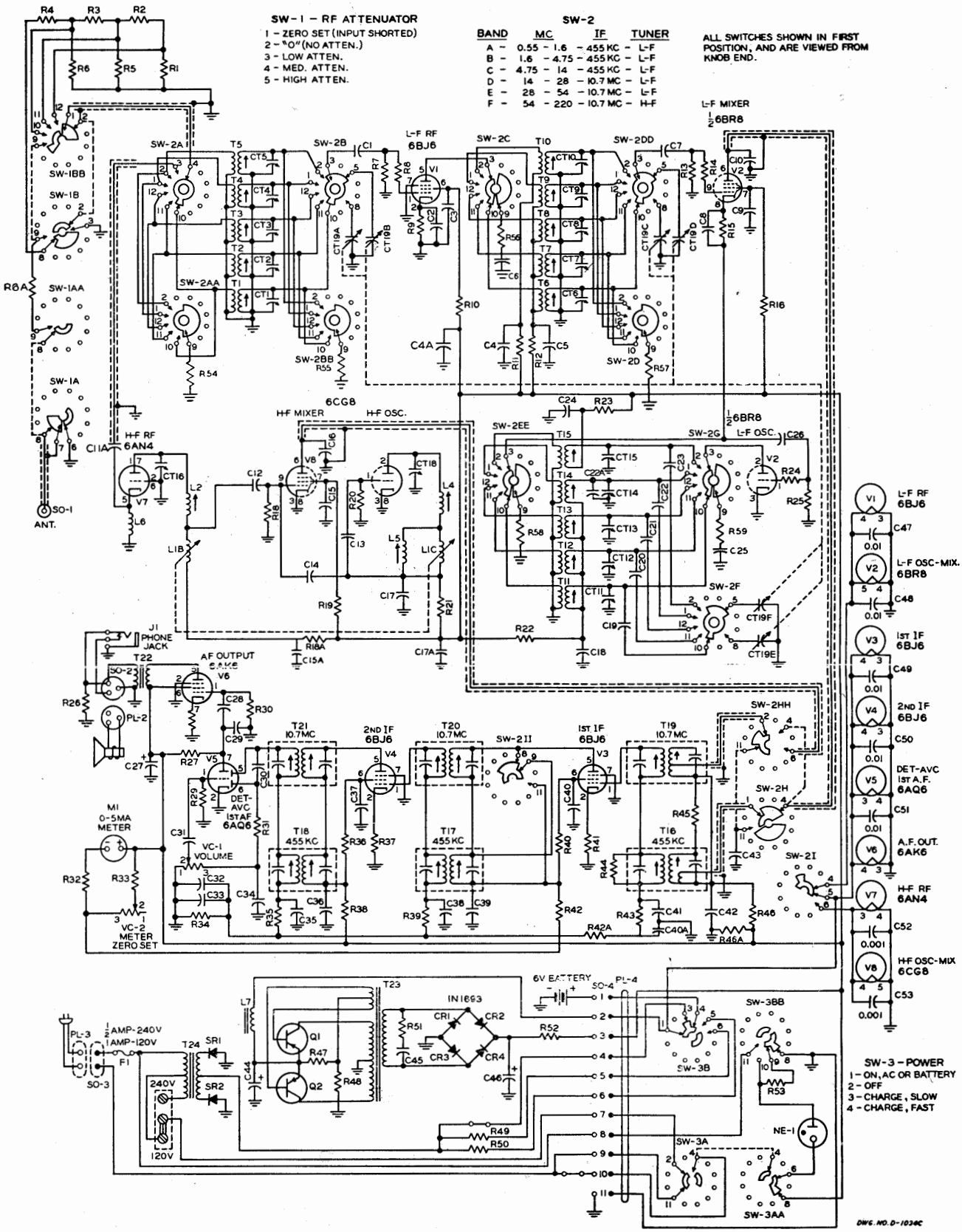MODEL 500 SCHEMATIC CIRCUIT
SERIAL NO. 503 AND UP