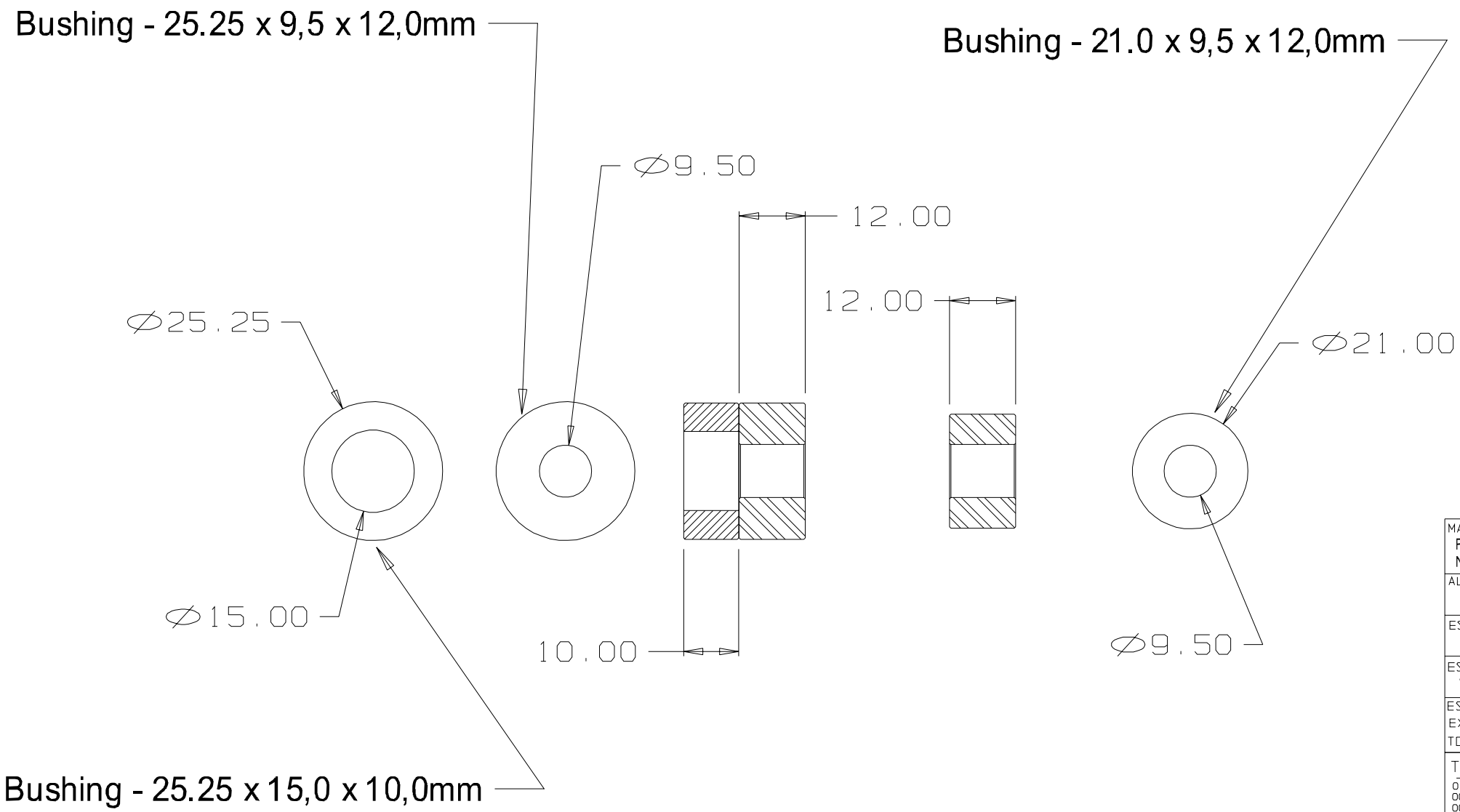

MATERIAL	PVC Extrusion Nylon Bushes
ALLOY	PVC + Nylon
EST. AREA	NA mm
EST. WEIGHT	?? kg/m
EST. PERIPHERY	EXT: NA mm TOT: NA mm
TOLERANCE	0.00mm ±0.1mm 00.0mm ±0.25mm 0000mm ±0.5mm 0-600mm ±0.1mm > 600mm ±0.5mm BS1474:1987 APPLIES UNLESS OTHERWISE SPECIFIED
JOB No.	3000

CASA Modular Systems
P.O. BOX 38-828, WELLINGTON, NEW ZEALAND
TELEPHONE : (64-4) 5687 277
FACSIMILE : (64-4) 5685 161

CUSTOMER : CASA Modular Systems				SIZE	DRAWING Reference No. / ISSUE
DESCRIPTION : Rotating Handle 29mm Dia x 60mm long				A4	WINDER-HANDLE / A
DRAWN : A.W.D	DATE : 22/02/11	APPROVED : ?	DWG. SCALE : 1:1		