KM 6 Sub-Rack System

For Eurocards To DIN 41494 and IEC 297

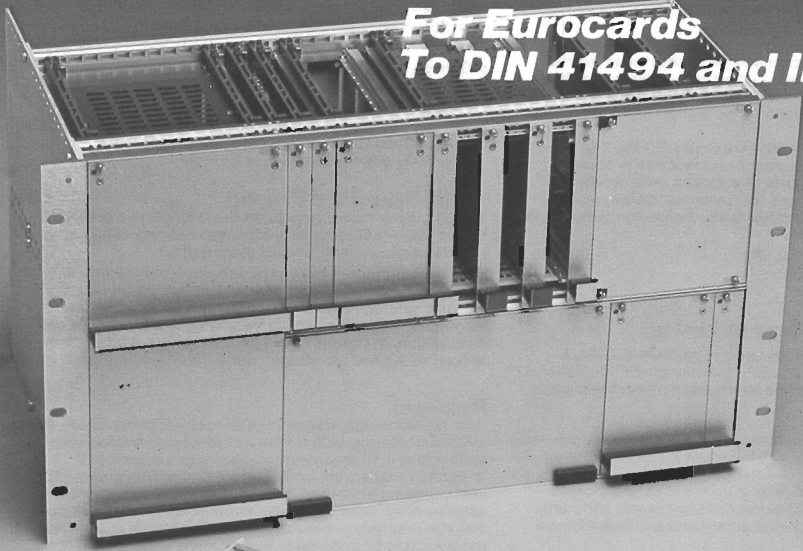

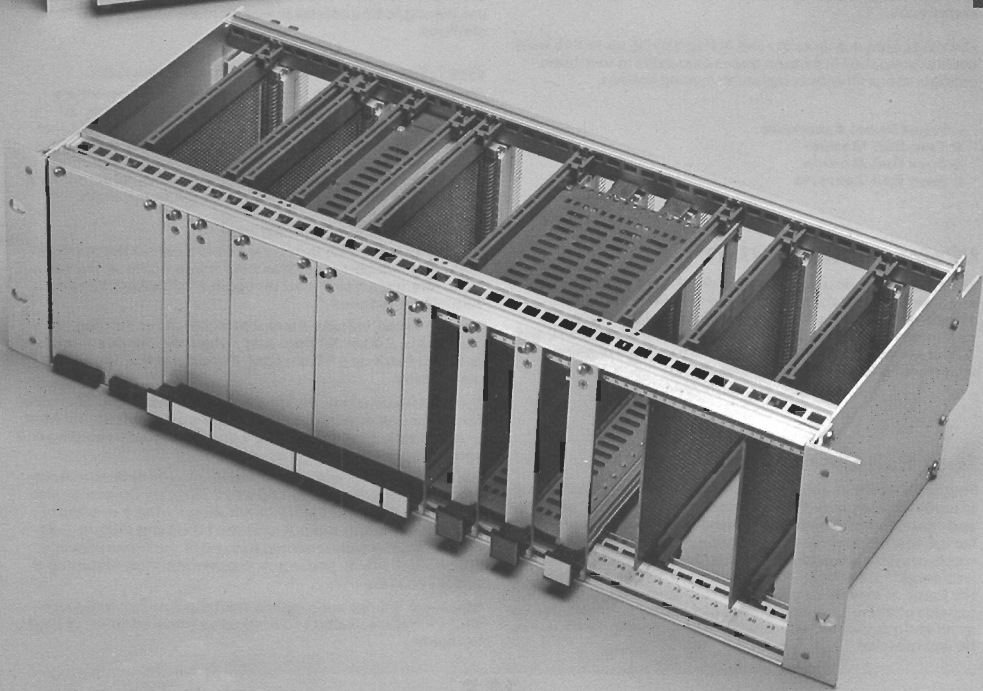

KM 6 Sub-Rack

For Eurocards

Standard and Universal Versions

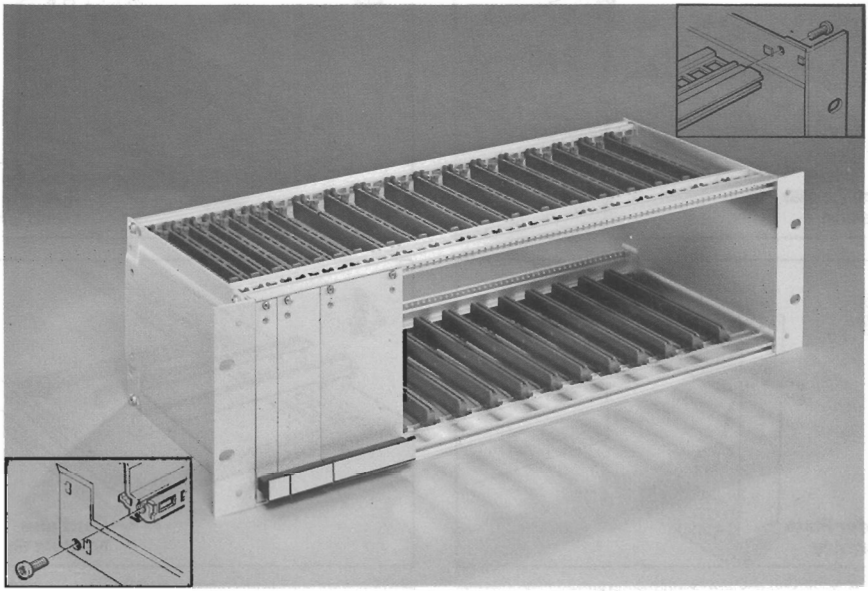

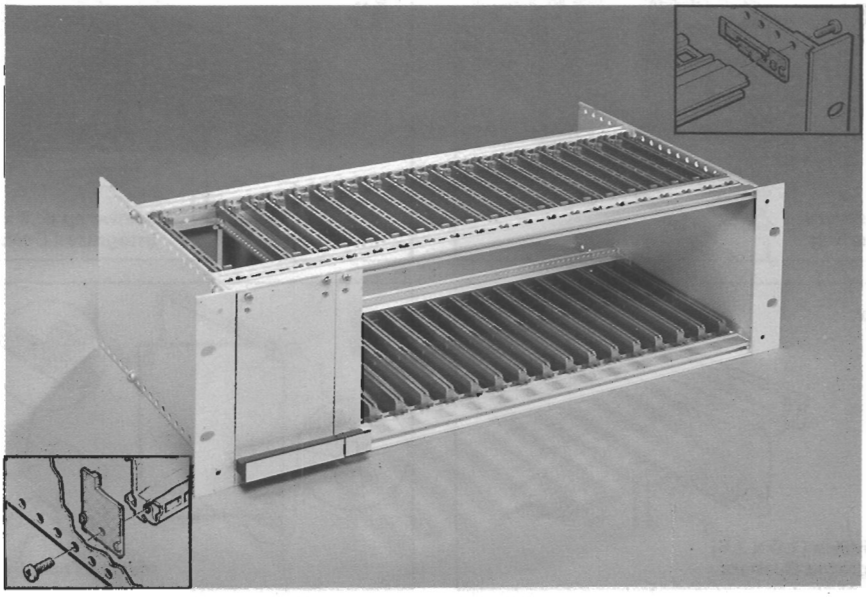

KM6 Sub-Rack

For Eurocards

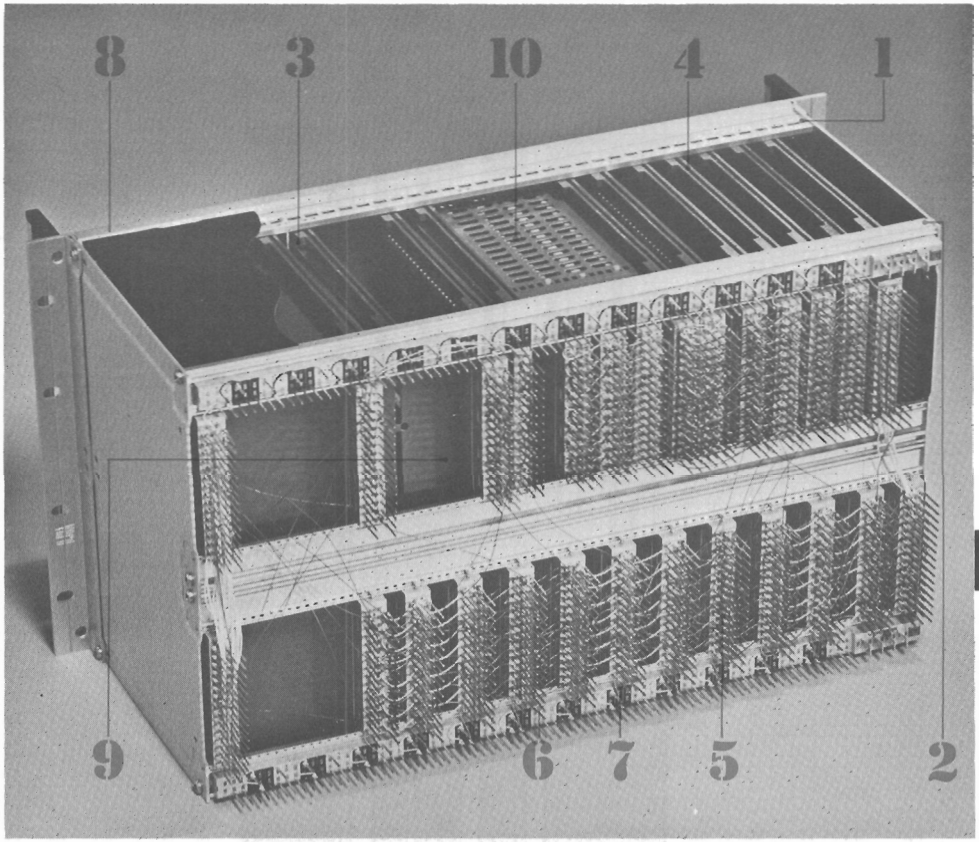

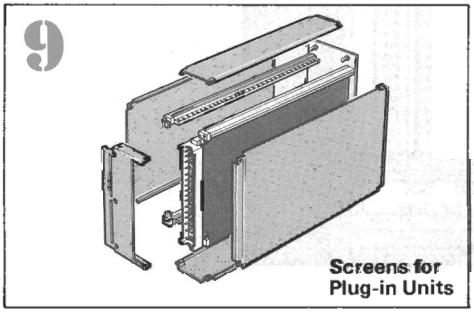

Screens for Plug-in Units

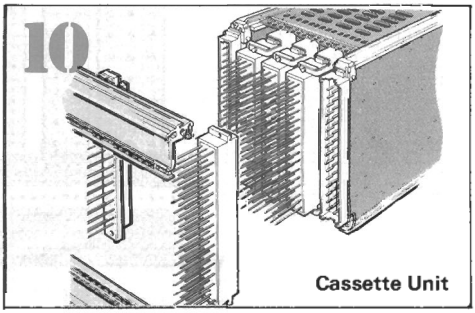

Cassette Unit

KM6 Sub-Rack

For Eurocards

All plug-in units are modular in concept and are based on the first card position being 3,27mm from the left hand datum line of the working aperture. Subsequent card positions are on multiples of 5,08mm (1E) from the first card position.

To allow for a uniform working clearance between front panels, the physical overall width of front panels is 0,4mm narrower than the nominal E x 5,08mm dimension quoted.

Indirect connectors to DIN41612 are located in accordance with the basic grid.

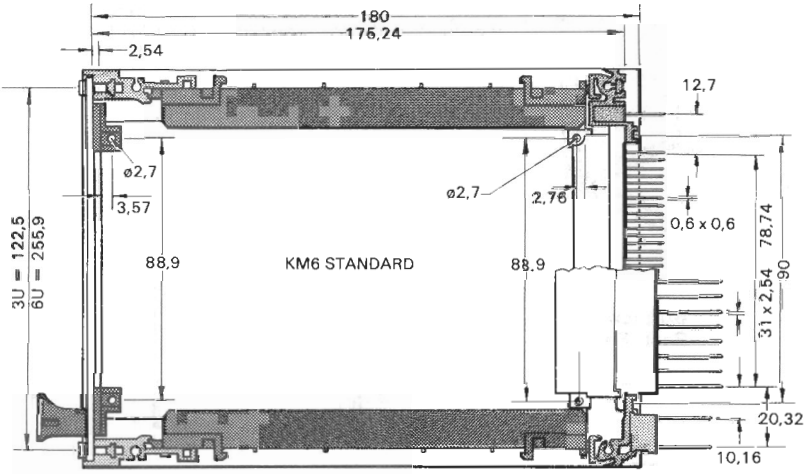

Side View

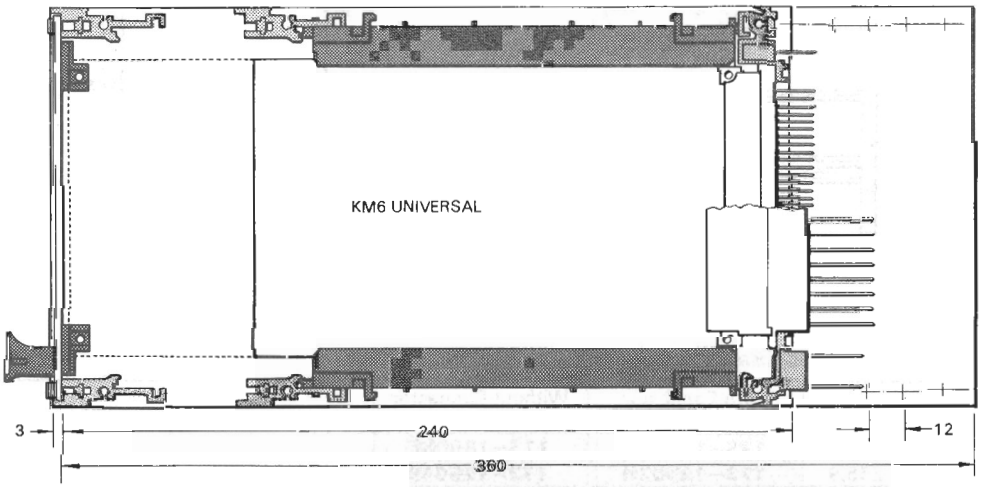

KM6 Sub-Rack

For Eurocards

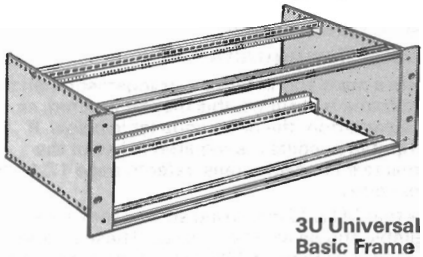

3U Universal Basic Frame

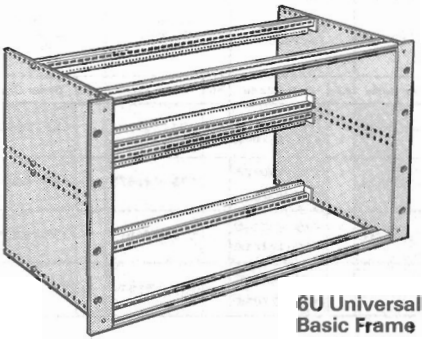

6U Universal Basic Frame

Universal Basic Frames

Available in two end plate depths

The basic frame kit consists of: — 2 end plates; 2 end plate angles; 2 front tie bars with tapped strips and location mouldings; 2 or 4 (3U or 6U) rear connector mounting rails with location mouldings and all fixing screws. The basic frame kit is also supplied without rear connector mounting rails (but including the basic number of location mouldings) to allow the fitting of integrated busbars. In such cases order busbars by reference to page 12.11. Any rear connector rails that may be required to complete the basic frame should be ordered separately. Note that when ordering tie bars, front or rear, in addition to the basic configuration the appropriate location mouldings must also be ordered.

The diagram below illustrates the front and rear tie bars in the normal forward position to suit cards and guides to the Eurocard standard. However, the end plates are pierced on a pitch of 12mm to enable all four tie bars to be fitted where required.

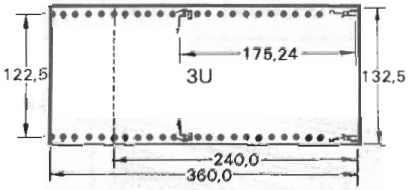

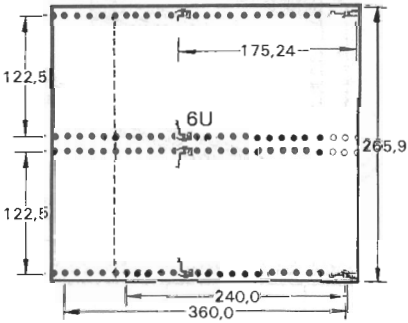

Frame Dimensions

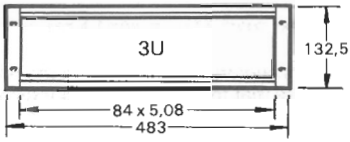

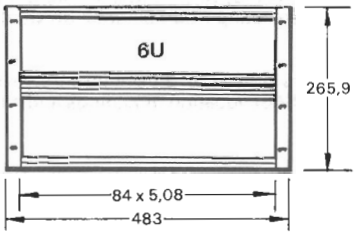

Order Codes for Basic Frames

Frame Size		With Connector Rail at Rear	Without Connector Rail at Rear*	
Height	Depth			
3U	240	**173–12516C**	**173–12520F**	
3U	360	**173–12517L**	**173–12521C**	
6U	240	**173–12518H**	**173–12522L**	
6U	360	**173–12519E**	**173–12523H**	

*For integrated busbars see page 12.11.

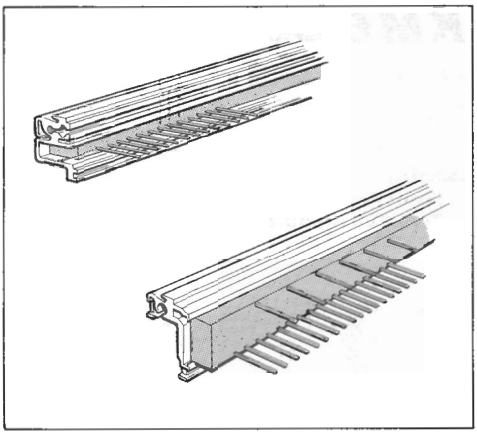

KM6 Sub-Rack

For Eurocards

Integrated Busbars

The busbar is assembled at the back of the frame, either at the top, centre or bottom or at any combination of positions, and is designed to be used in conjunction with indirect connectors to DIN41612. Power input terminals are located at the right when viewed from the rear. Clear identification is printed throughout the length of the busbar body.

Miniwrap pins positioned accurately on a single horizontal line, pitched at multiples of 2,54mm.

This pin pitch is laterally in line with the corresponding rows of connector pins.

Midiwrap pins are positioned on two horizontal rows, which also lie on the same 2,54mm grid.

The vertical dimension between the pins at the end of a connector and the corresponding busbar pin is also a multiple of 2,54mm.

The design of the busbar assembly is such that the face of the busbar and the face of the connector body are on one plane.

Specification

	Miniwrap	Midiwrap
Physical		
Wire wrap pins	0,6 x 0,6mm	1,0 x 1,0mm
Power Input	Spade Terminal 6,3 x 0,8mm	Spade Terminal 6,3 x 0,8mm
Material & Finish	Bronze, electrotin	Brass, electrotin
Flammability	Self-extinguishing to ASTM-D635 SE1 Does not form drops	Self-extinguishing to ASTM-D635 SE1 Does not form drops
Class of use	HMD to DIN40040	HMD to DIN40040
Working Temp.	$-25^{o}C$ to $+100^{o}C$	$-25^{o}C$ to $+100^{o}C$
Electrical		
Conductor section	$4,2mm^2$	$6,4mm^2$
Conductor circum.	15,2mm	14,8mm
Conductor resist.	$10m\Omega$	$4,5m\Omega$
Specific resistance	$\frac{9,0mm}{\Omega mm^2}$	$\frac{14,0mm}{\Omega mm^2}$
Test voltage between levels	600V~	1,000V~
Impedance	$1.5\Omega - 2.7\Omega(\sqrt{\frac{L}{C}})$	$1.5\Omega - 2.7\Omega(\sqrt{\frac{L}{C}})$
Capacitance between levels	1,000pF	1,000pF
Inductivity between levels	6,0nH	6,0nH
Min. air distance between levels	≥1,2mm	≥3,0mm
Insulation resistance between levels at 100V, 20°C, 40% relative humidity	≥1,000MΩ	≥1,000MΩ

Order Code	Position in frame	No. of levels	Termination arrangement
173–13002E	Top	Four	Miniwrap 0,6 x 0,6 Post size
173–13003B	Top	Three	
173–13004K	Top	Two	
173–13005G	Bottom	Four	
173–13006D	Bottom	Three	
173–13007A	Bottom	Two	
173–13008J	Top	Five	Midiwrap 1,0 x 1,0 Post size
173–13009F	Top	Four	
173–13010G	Top	Three	
173–13011D	Bottom	Five	
173–13012A	Bottom	Four	
173–13013J	Bottom	Three	

Card Mounting
Location and screening capability

Normal Mounting Block (viewed from rear of panel)

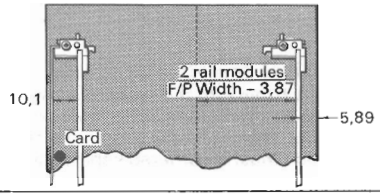

Alternative Mounting Block (viewed from rear of panel)

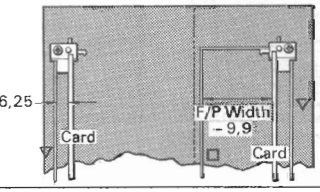

The above diagrams indicate screening capabilities and the use of mounting blocks. Where an alternative mounting block is required to mount a screen this will be supplied with the screen.

When locating a plug-in unit adjacent to the divider plate on its left-hand side, an alternative right hand screen must be used.

KM 6 Sub-Rack
For Eurocards
Plug-in Units — Screening

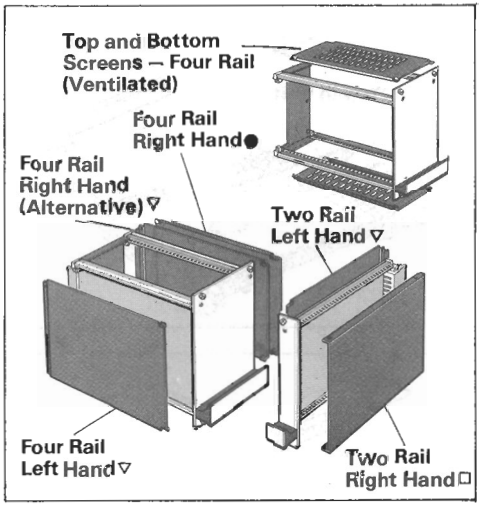

▽ Flat Screen
● Standoff Screen
□ Wraparound Screen

Order Code Schedule Plug-in Units and Screens

Plug-in Unit Size		Front Panel Assembly	Modules			Module Base Plate	Top and Bottom Screens	Module Side Screens		
Height	Width		2-Rail	4-Rail	Cassette			left-hand	right-hand	alternative right-hand
3U	3E	174–12901E	174–12917E	–	–	–	–	174–13021C▽	–	–
	4E	174–12902B	174–12918B	–	–	–	–		174-13023H□	–
	5E	174–12903K	174–12919K	–	–	–	–		174-13024E□	174-13023H□
	6E	174–12904G	174–12920L	–	–	–	–		174-13025B□	174-13024E□
	7E	174–12905D	174–12921H	–	–	–	–		174-13026K□	174-13025B□
	8E	174–12906A	174–12922E	–	–	–	–		174-13027G□	174-13026K□
	9E	174–12907J	174–12923B	–	–	–	–		174-13028D□	174-13627G□
	10E	174–12908F	–	174–12924K	–	174–13037C	174–12965B	174–13021C▽	174–13035J●	174–13021C▽
	12E	174–12909C	–	174–12925G	–	174–13038L	174–12966K			
	14E	174–12910D	–	174–12926D	–	174–13039H	174–12967G			
	21E	174–12911A	–	174–12927A	174–13015F	174–13040J	174–12968D			
	24E	174–12912J	–	174–12928J	–	174–13041F	174–12969A			
	42E	174–12913F	–	174–12929F	174–13016C	174–13042C	174–12970B			
	60E	174–12914C	–	174–12930G	–	174–13043L	174–12971K			
	63E	174–12915L	–	174–12931D	–	174–13044H	174–12972G			
	84E	174–12916H	–	–	–	–	–			
6U	3E	174–12933J	174–12949J	–	–	–	–	174–13022L▽	–	–
	4E	174–12934F	174–12950K	–	–	–	–		174-13029A□	–
	5E	174–12935C	174–12951G	–	–	–	–		174-13030B□	174-13029A□
	6E	174–12936L	174–12952D	–	–	–	–		174-13031K□	174-13030B□
	7E	174–12937H	174–12953A	–	–	–	–		174-13032G□	174-13031K□
	8E	174–12938E	174–12954J	–	–	–	–		174-13033D□	174-13032G□
	9E	174–12939B	174–12955F	–	–	–	–		174-13034A□	174-13033D□
	10E	174–12940C	–	174–12956C	–	174–13037C	174–12965B	174–13022L▽	174–13036F●	174–13022L▽
	12E	174–12941L	–	174–12957L	–	174–13038L	174–12966K			
	14E	174–12942H	–	174–12958H	–	174–13039H	174–12967G			
	21E	174–12943E	–	174–12959E	–	174–13040J	174–12968D			
	24E	174–12944B	–	174–12960F	–	174–13041F	174–12969A			
	42E	174–12945K	–	174–12961C	–	174–13042C	174–12970B			
	60E	174–12946G	–	174–12962L	–	174–13043L	174–12971K			
	63E	174–12947D	–	174–12963H	–	174–13044H	174–12972G			
	84E	174–12948A	–	–	–	–	–			

12

KM 6 Sub-Rack

For Eurocards

Accessories for Plug-in Units and Cassettes

Connector Mounting Blocks for Plug-in Units

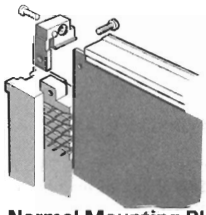

Normal Mounting Block

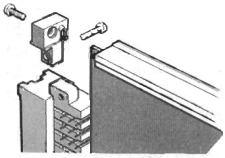

Alternative Mounting Block

The use of these connector mounting blocks is described in page 11. Normal mounting blocks are supplied with all 2 and 4 rail plug-in units.

When an alternative card position is employed (without screening), alternative connector mounting blocks should be ordered separately.

Order Code	Type of Block
174–13020F	Alternative Mtg. Block

Connector mounting screws. M2, 5 x 10mm, should be ordered separately in packets of 100.

Order Code	41–20505A

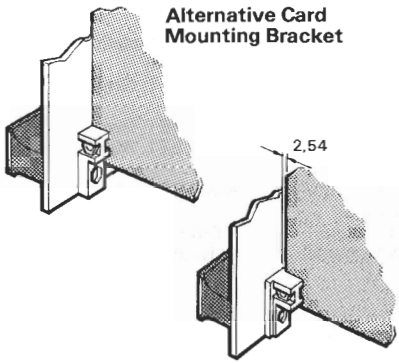

Normal Card Mounting Bracket

Card Mounting Brackets

When mounting intermediate cards with front panels in a cassette unit the alternative card mounting bracket must be used, to afford clearance at the rear of the cassette, for the leg of the connector mounting bracket.

Card mounting brackets are supplied as a kit comprising 2 brackets and card fixings.

Order Code	Type of Bracket
173–12525B	Normal Front Bracket
173–12524E	Alternative Front Bracket

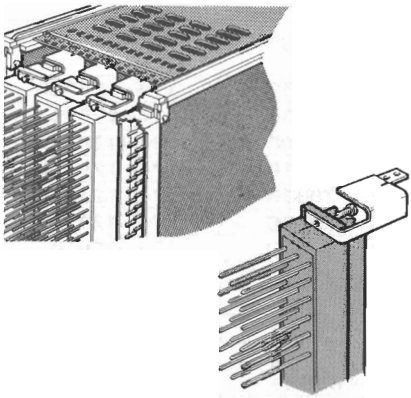

Connector Mounting Bracket – Cassette

Connector Mounting Brackets for Cassettes

The connector mounting brackets are used to mount connectors at the rear of cassette units. Supplied in packets of five pairs. Note that the alternative card mounting bracket shown above must also be used.

Order Code	Type of Connector Mtg. Bracket
174–13017L	For Rear of Cassette

Connector mounting screws. M2, 5 x 6mm, should be ordered separately in packets of 100.

Order Code	173–12530B

12

KM 6 Sub-Rack

For Eurocards

Hinged Front Panels

Hinged panels are supplied as a kit consisting of panel, hinges and fixing screws.

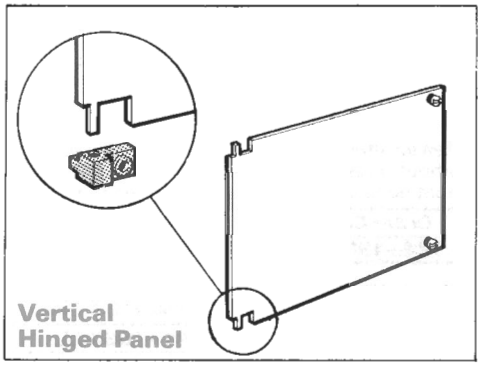

Vertical Hinged Panel

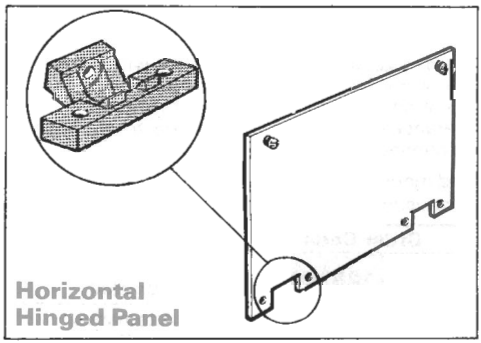

Horizontal Hinged Panel

Materials Specification

Extrusions:	Aluminium Alloy BS1474 HE9 TF Etched and clear anodise
End plates, Standard:	2mm BS1470 NS4 ½H Etched and clear anodise
End plates, Universal:	2,5mm BS1470 NS4 ½H Etched and clear anodise
Front panels:	2,5mm BS1470 NS4 ½H Etched and clear anodise
Front panel handle insert:	1,5mm BS1470 NS4 ½H
Module base plate:	Etched and clear anodise
Module side screen:	0,5mm PVC clad, pre-painted Steel
Module rear panel:	1mm PVC clad, pre-painted Steel
Top, bottom and rear dust covers:	0,7mm Black Plastisol coated Mild Steel
Card/Module guide:	Noryl SE1, Green
Universal location mouldings:	Noryl SE1, Grey
Handle moulding:	Norly SE1, Black
Card Mounting bracket:	Noryl SE1, Black
Front panel handle insert:	1,5mm clear Darvic PVC
Cassette guide:	Polycarbonate

Further Accessories

Card Handles – Section 10
Frame Handles – Section 22

Hinged Panels Order Codes

Frame Height		Panel Width		Vertically Hinged Panel	Horizontally Hinged Panel
3U	132,5	14E	71,12	174–12988G	174–12974A
		21E	106,68	174–12989D	174–12975J
		24E	121,92	174–12990E	174–12976F
		42E	213,36	174–12991B	174–12977C
		60E	304,80	174–12992K	174–12978L
		63E	320,04	174–12993G	174–12979H
		84E	426,72	174–12994D	174–12980J
6U	265,9	14E	71,12	174–12995A	174–12981F
		21E	106,68	174–12996J	174–12982C
		24E	121,92	174–12997F	174–12983L
		42E	213,36	174–12998C	174–12984H
		60E	304,80	174–12999L	174–12985E
		63E	320,04	174–13000C	174–12986B
		84E	426,72	174–13001L	174–12987K

KM 6 Sub-Rack

For Eurocards

Accessories for Standard and Universal Frames

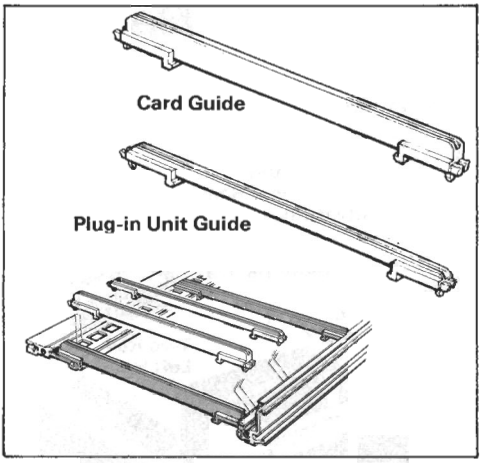

Card and Module Guides

Guides, which clip into the assembled frame, are available to accommodate either Eurocards or Plug-in units. Frame kits are supplied without guides which must be ordered separately.

Supplied in packets of 10.

Order Code	Type	Length
173–12553G	Card	160,00
173–12554D	Module	160,00
173–12629L	Card	220,00
173–12630B	Module	220,00

For 220mm deep plug-in units and compatible screens see leaflet VE/353.

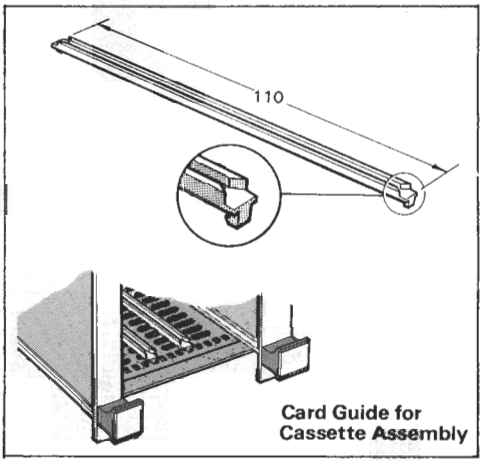

Card Guide – Cassette

Supplied in packets of 10, these moulded card guides clip into the top and bottom mounting plates on a standard pitch of 5,08mm.

Order Code	Type of Guide
174–13014J	Card Guide in Cassette

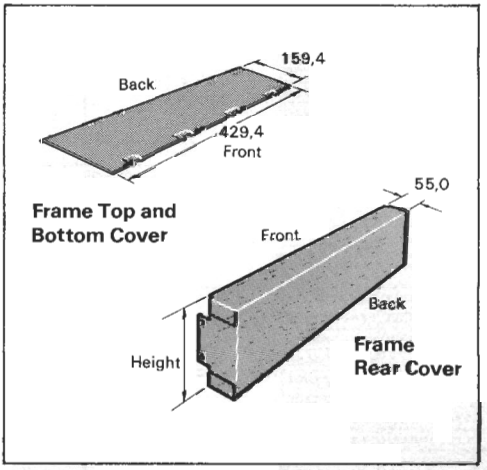

Dust Covers

For use with 'Standard' frames. Rear dust covers are supplied singly. Top and Bottom covers in pairs, with clips and fixings as required.

Order Code	Position	Height
173–12526K	Top/ Bottom	–
173–12527G	Rear	3U
173–12528D	Rear	6U

KM 6 Sub-Rack

For Eurocards

Plug-in Units

3U and 6U high in four basic configurations

- **Front Panel Assembly**
- **Four Rail Module**
- **Two Rail Module**
- **Four Rail Cassette**

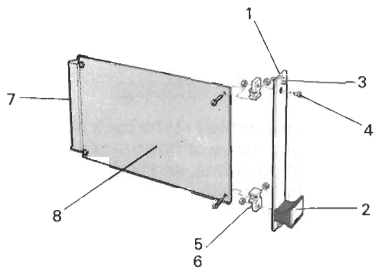

Front Panel Assembly

Contents of kit

Item 1 Front Panel
Item 2 Handle
Item 3 Panel fixings
Item 4 Assembly screws

Accessories

Item 5 Card mounting bracket
item 6 Alternative card mounting bracket
Item 7 Connectors to DIN41612
Item 8 Eurocard

Available in full range of widths from 3E to 84E

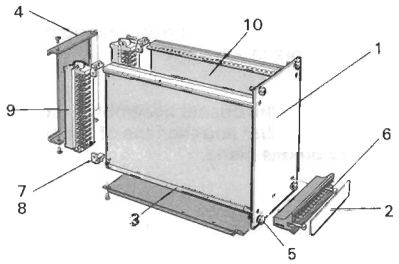

Four Rail Module

Contents of kit

Item 1 Front panel
Item 2 Handle
Item 3 Guide rails
Item 4 Rear plate
Item 5 Panel fixings
Item 6 Assembly screws
Item 7 Rear mounting blocks and screws

Accessories

Item 8 Alternative rear mounting block
Item 9 Connectors to DIN41612
Item 10 Eurocards Screens

Available in 10E, 12E, 14E, 21E, 24E, 42E, 60E, 63E and 84E wide.

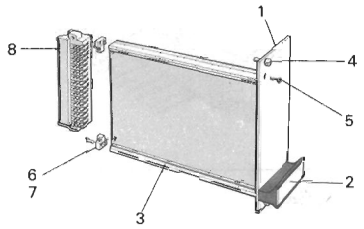

Two Rail Module

Contents of kit

Item 1 Front panel
Item 2 Handle
Item 3 Guide rails
Item 4 Panel fixings
Item 5 Assembly screws
Item 6 Rear mounting blocks and screws

Accessories

Item 7 Alternative rear mounting blocks
Item 8 Connectors to DIN41612
Item 9 Eurocard Screens

Available in 3E, 4E, 5E, 6E, 7E, 8E and 9E wide.

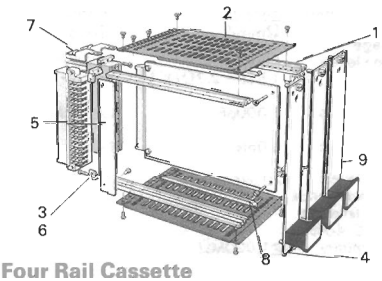

Four Rail Cassette

Contents of kit

Item 1 Guide rails
Item 2 Mounting plates top and bottom
Item 3 Rear mounting blocks and screws
Item 4 Front panel kit
Item 5 Back Panel

Accessories

Item 6 Alternative rear mounting blocks
Item 7 Rear mounting brackets
Item 8 Card guides
Item 9 Alternative card mounting bracket
Screens

Available in 21E and 42E widths. 3U high only

Handle Identification Strip

Front panel and module assembly kits include handle identification strips and transparent plastic covering strips.

Cassette Front Panels

Numerous front panel arrangements are possible, including front panels of full cassette width, multi-front panels of narrower widths and combined arrangements of front panels and cards. NOTE: Front panel kits must be ordered separately, see front pnaels and accessories at the top of this column.

Design

Plug-in units are easy to assemble requiring no subsequent adjustment. Several connectors may be mounted on the rear of a cassette version which is designed to be a self-contained unit and may be plugged into a sub-frame as a fully wired and tested component.

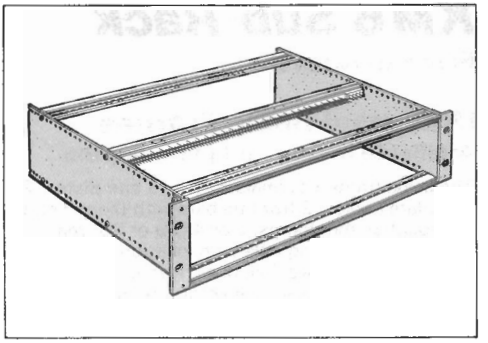

KM 6 Sub-Rack

For Eurocards

Special Configurations

Where a more sophisticated arrangement than the basic frame is required, this may be ordered, as piece parts from the order code table below. If intergrated busbars are required in lieu of the normal rear connector rails, refer to page 12.11 for order codes.

Note that M4 x 12mm fixing screws for frame assembly should also be ordered. These screws are supplied in packets of 100 to the following order code.

Order Code	173–12529A	M4 x 12mm screw

Frame Size		End Plates		End Plate Angles		Front Tie Bars Top/Bottom		Tapped Strip		Rear Tie Bars Top/Bottom		Location Moulding Front		Location Moulding Rear	
Height	Depth	No.	Order Codes	No.	Order Codes	No.	Order Code	No.	Order Code	No.	Order Code	No.	Order Code	No.	Order Code
3U	240	2	173–12533D	2	173–12539H	1 1	173–12552K 173–12551B	2	173–12704C	1 1	173–13018E 173–12701A	1	173–12557F	1	173–12558C
3U	360	2	173–12534A	2	173–12539H	1 1	173–12552K 173–12551B	2	173–12704C	1 1	173–13018E 173–12701A	1	173–12557F	1	173–12558C
6U	240	2	173–12535J	2	173–12540J	1 1	173–12552K 173–12551B	2	173–12704C	2 2	173–13018E 173–12701A	1	173–12557F	2	173–12558C
6U	360	2	173–12536F	2	173–12540J	1 1	173–12552K 173–12551B	2	173–12704C	2 2	173–13018E 173–12701A	1	173–12557F	2	173–12558C

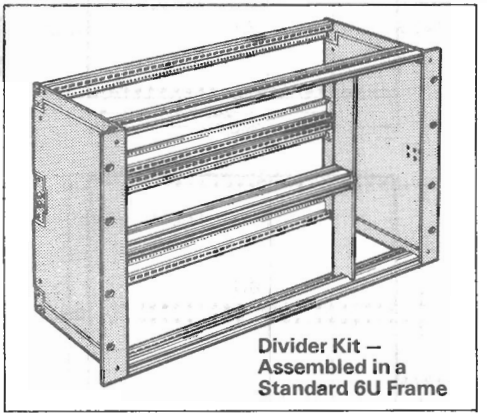

Divider Kit — Assembled in a Standard 6U Frame

Divider Kits for 6U Sub-Racks

Standard and Universal Frames

Divider kits should be ordered from the table below. Note that the 'E' dimensions indicating the front panel width shown from the right hand side only, but they equally apply if dimensioned from the left. (Note: 1E = 5,08mm)

A 6U section may be placed in the centre of the frame by selecting a combination of two divider kits.

Divider kits consist of: 2 front tie bars; divider plate (not with 84E); location mouldings and all fixing screws.

Order Code Schedule — Divider Kits

Divider Rail Length	21E	24E	42E	60E	63E	84E
Order Code	173–12511G	173–12512D	173–12513A	173–12514J	173–12515F	173–12510K
Divider Rail To Right Hand	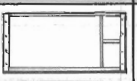	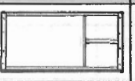	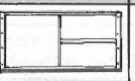	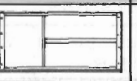	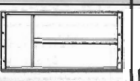	
Order Code	173–12505K	173–12506G	173–12507D	173–12508J	173–12509A	
Divider Rail To Left Hand	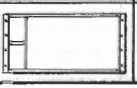	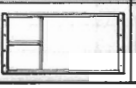	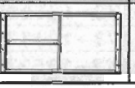		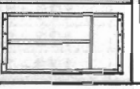	

KM6 Sub-Rack

For Eurocards

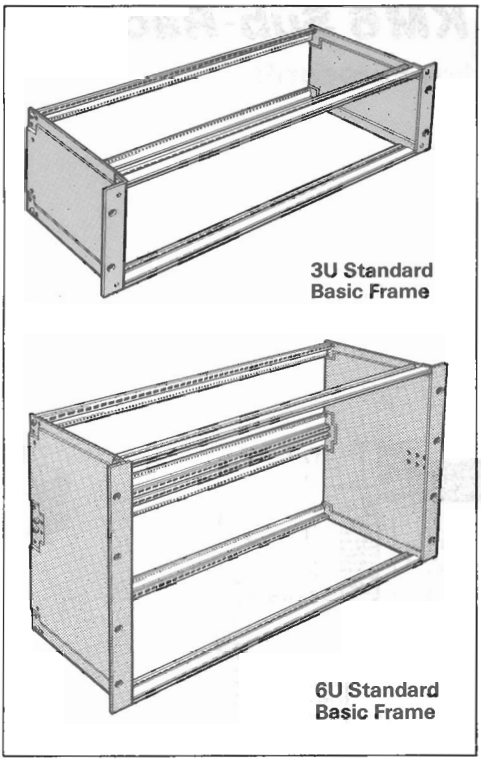

Standard Basic Frames

The basic frame kit consists of: — 2 end plates; 2 end plate angles; 2 front tie bars with tapped strips; 2 or 4 (3U or 6U) rear connector mounting rails and all fixing screws. The basic frame kit is also supplied without rear connector mounting rails to allow the fitting of integrated busbars. In such cases order busbars by reference to page 12.11. Any rear connector mounting rails which may also be required to complete the basic configuration should be ordered separately from the Universal Frame schedule on page 12.10.

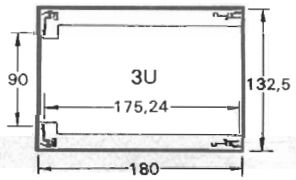

Frame Dimensions

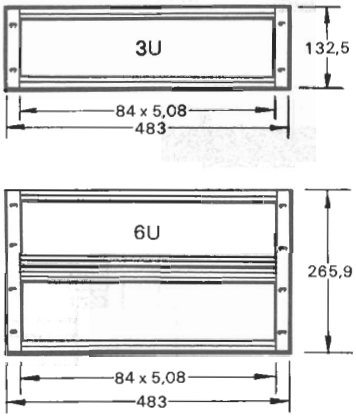

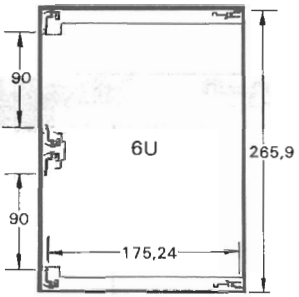

Order Codes for Basic frames

Frame Height	With Connector Rails at Rear	Without Connector Rails at Rear*	
3U — 132,5	**173–12501L**	**173–12503E**	
6U — 265,9	**173–12502H**	**173–12504B**	

*For integrated busbars see page 12.11.

KM 6 Sub-Rack

For Eurocards

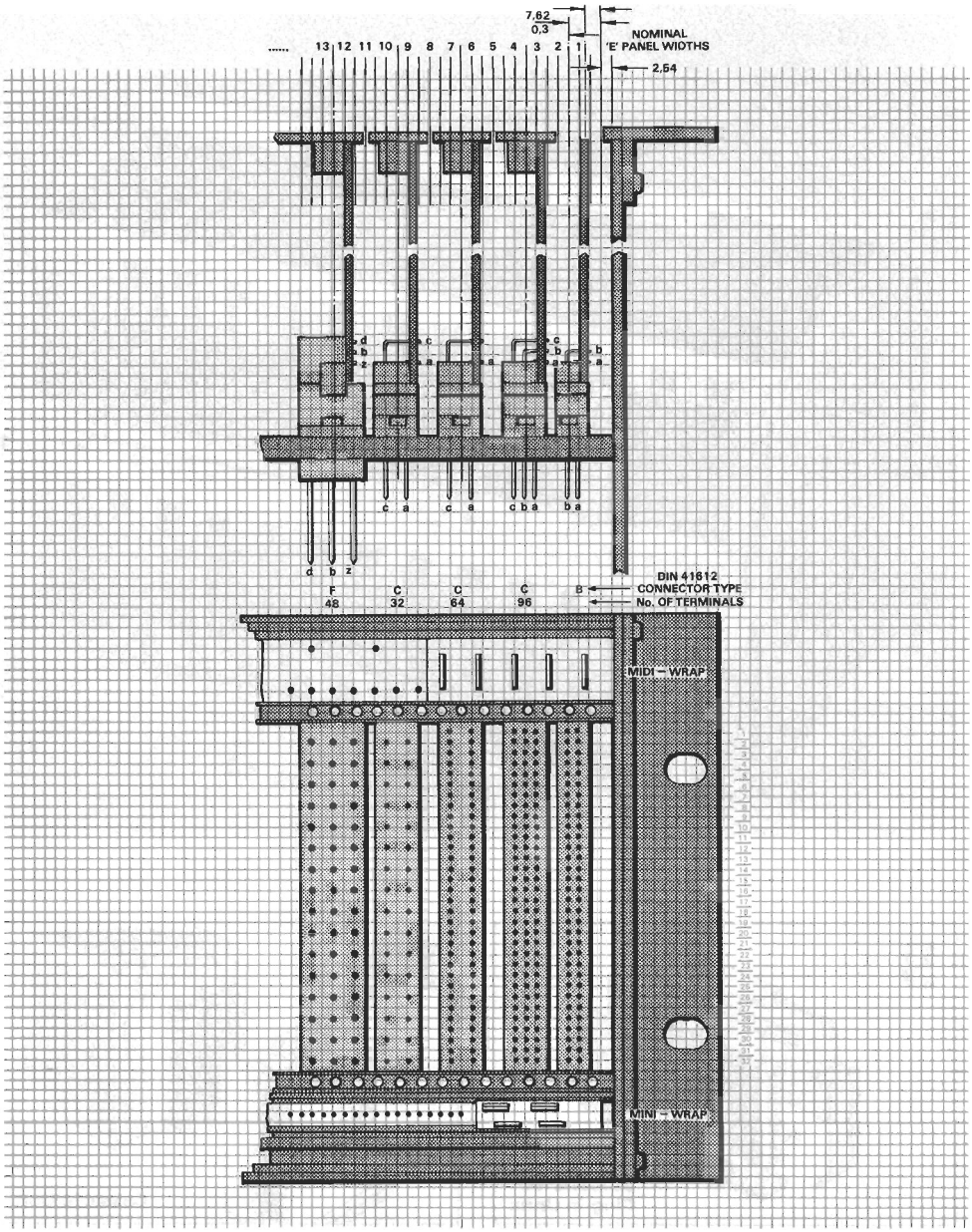

KM 6 Sub-Rack

Front Tie Bar
Location

Rear Tie Bar
Location

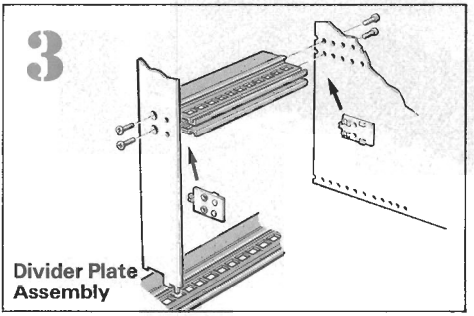
3
Divider Plate
Assembly

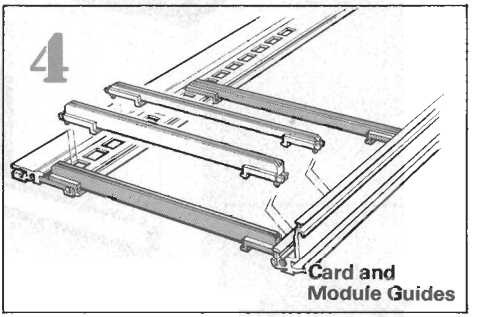
4
Card and
Module Guides

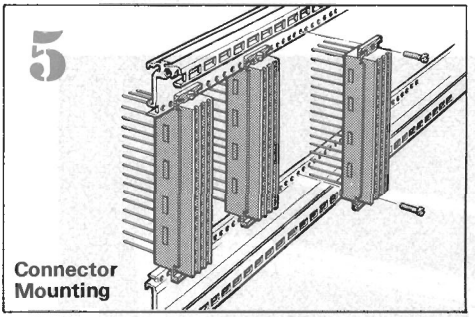
5
Connector
Mounting

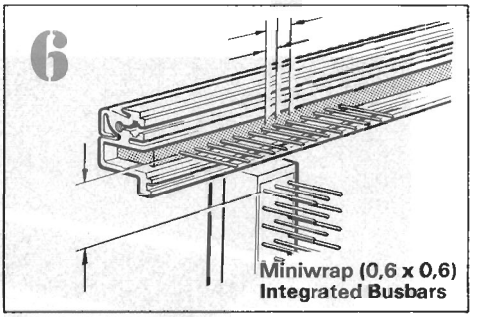
6
Miniwrap (0,6 x 0,6)
Integrated Busbars

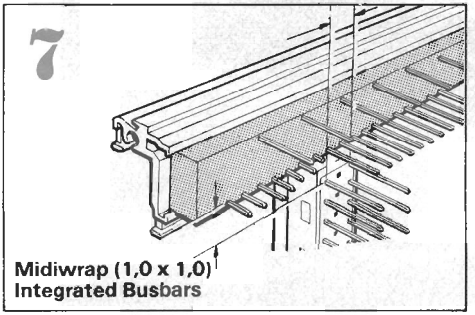
7
Midiwrap (1,0 x 1,0)
Integrated Busbars

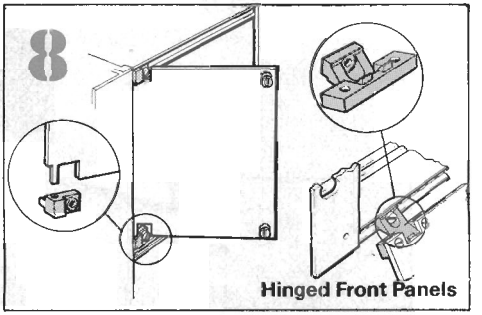
8
Hinged Front Panels

System KM6 Philosophy

By bringing together their British and West German design teams Vero has succeeded in reconciling the latest thinking associated with the drafting and publication of the various specifications forming future standards for a national and international sub-rack system.

The design philosophy built into the Vero KM6 sub-rack system therefore exactly meets and satisfies the requirements of IEC Publication 297 Edition 2, DIN41494 and the IEC Sub-Committee SC48D Draft Specification.

The KM6 sub-rack system accepts connectors manufactured to DIN41612 and the related specifications VG95324 and IEC 130-14.

Vero have succeeded in combining a sophisticated overall design concept with modern and attractive styling, and by applying advanced tooling and manufacturing methods ensure simple, trouble free assembly to the highest order of accuracy.

Two card frame configurations are available:- the 'Standard' frame for applications where the user requires to house components and accessories to standard, and therefore compatible dimensions, and the 'Universal' frame where additional flexibility is required to also house non standard, or custom-made equipment.

System KM6 Plug-in Units

Plug-in units which form the heart of the KM6 Sub-Rack System are designed to conform to national and international standards and may therefore be housed in either standard or universal frame.

These units are compatible with other manufacturers sub-racks which conform to the IEC or DIN standard.

The whole family of KM6 plug-in units based on a modular concept ensuring strict alignment of front panels and fixing screws, affording positional accuracy and an elegant frontal appearance.

The range includes units 3U and 6U high by 3E up to 84E wide. Units are supplied in kit form and are available in four basic configurations all with complete screening options.

- **Front Panel Assembly**
- **Two Rail Module**
- **Four Rail Module**
- **Four Rail Cassette**

Choice of Plug-in Unit

The type of plug-in unit selected is dependent on fucntional requirements, and the type, size and weight of the various components to be mounted, however the 3U high four rail cassettes which are available in two standard widths, 21E and 42E are of particular interest as they are capable of being assembled as complete functional units.

Four Rail Cassettes

Four rail cassette units are designed to house a number of plug in cards interconnected through two-part connectors mounted and contained within the component. Input/output connections for the whole component. Input/output connections for the whole cassette are made via connectors mounted to the left and/or right of the unit. Plug-in cassettes may be back wired in the frame or may be considered as self-contained 'sub-frames' capable of being assembled, back wired and completely tested as an entity totally separate from the housing into which it is to be incorporated.

KM6 Sub-Rack System

For Eurocards
To DIN41494 and IEC 297

Specification definitions: —

I IEC 297 Edition 2 specification establishes the heights and widths of 19" front panels, also fixing centres and cabinet apertures.

II German DIN41494 specification establishes sub-rack dimensions compatible with Eurocard sizes or Board and Plug-in units.

III IEC Sub-Committee SC48D, draft specification, amalgamates specification I and II to form all embracing formula internationally acceptable.

KM6 Standard Frame

The 'Standard' frame, designed around single and double height 160mm Eurocards, is of rugged construction and features a minimum number of piece parts.

Half shears formed in the end plates, accurately locate all horizontal extrusions which are secured by fully threaded machine screws. Assembly is completely trouble free, no subsequent adjustment being necessary. In addition, the rear tie bars contain integral connector mounting flanges with accurately aligned pre-tapped holes.

Busbars

Rear extrusions are available in two optional forms. Either without busbars or with busbars integrally assembled in both miniwrap or midiwrap versions. The factory assembled integrated busbars are available in 2, 3, 4 or 5 level variants, with wrapping pins when, on assembly into a frame, locate exactly on the same X-Y grides as the connector terminations and also precisely in the same plane. This enables complete packwiring to be undertaken by automatic or semi-automatic methods.

Divider Assembly for 6U Frames

Front horizontal divider rails and vertical divider plates are easily assembled into a 6U frame, providing a two-tier 3U configuration or a combination of 3U and 6U. No front panel space is occupied by the incorporation of a divider plate. The connector mounting rails are not divided, even in a divided frame, thus enabling the integrity of the connector termination pitch to be maintained throughout the full frame width.

KM6 Universal Frame

The 'Universal' frame is designed to embody all the optional features available to the 'Standard' frame whilst, at the same time, offering a frame ideal for applications where maximum flexibility is required.

The 'Universal' version is supplied either 3U or 6U high, with end planes, 240 or 360mm deep, which incorporate a series of punched holes on a 12mm pitch throughout the whole end plate depth.

Horizontal extrusions, identical to those used on the 'Standard' frame, may be assembled at any required depth from the front panel, exactly positioned using a unique location moulding and secured again by machine screws.

'Universal' frames will accommodate plug-in units in a variety of depths including those 160 and 220 deep. Cards may also be located deeper in the frame allowing for the mounting of front panel meters and instruments. Cards and plug-in units may be alternatively mounted forward in the frame allowing space at the rear to house power packs etc. Rear mounting is equally possible.

'Universal' frames are supplied in kit form, or as piece parts which may be selected and ordered as required, offering total flexibility.