SUNON

SPECIFICATION FOR APPROVAL

CUSTOMER	:	
DESCRIPTION	:	**DC BRUSHLESS FAN**
DIMENSIONS	:	**40x40x10 mm**
M O D E L	:	**KD1204PFS2**
P/N	:	**H**
APPROVED NO	:	
APPROVED BY	:	

(AUTHORIZED)

研發部 1.11

DAWN.	Chiahui 11/8	CHKD.		APPD.		SPEC.NO	D401449
						ISSUE DATE	11.08.2000
						EDITION	0
						REVISE DATE	-
						E.SPEC	ED40234

建準電機工業股份有限公司
SUNONWEALTH ELECTRIC MACHINE INDUSTRY CO., LTD.
12FL., 120 CHUNG CHENG 1ST RD., TEL:886-7-7163069(41 LINES)
KAOHSIUNG, TAIWAN, R. O. C. FAX:886-7-7163086~89

DC BRUSHLESS FAN

MODEL: KD1204PFS2

P/N : H

CHARACTERISTICS

1. Motor Design	:	Patented single-coil DC brushless 4 poles motor Design.
2. Insulation Resistance	:	More than 500M ohm between internal stator and lead wire(+) measured by DC 500V.
3. Dielectric Strength	:	Applied AC 500V for one minute or AC 600V for 2 seconds between housing and lead wire(+)
4. Noise Level	:	Measured in an semi-anechoic chamber with background noise level below 15 dB(A). The fan is running in free air with Microphone at a distance of one meter from the fan intake.
5. Input power, Current & Speed	:	Measured after continuous 30 minutes Operation at rated voltage in clean air at ambient temperature of 25 degrees C.
6. Tolerances	:	±15% on rated power and current.
7. Motor Protection	:	Locked rotor protected.
8. Air Performance	:	Measured by a double chamber. The value are recorded when the fan speed is stabilized at rated voltage.

SPECIFICATIONS

MODEL: KD1204PFS2
P/N : H

1-1. Rated Voltage	:	12 VDC
1-2. Operating Voltage Range	:	6-13.8 VDC
1-3. Starting Voltage	:	6 VDC
1-4. Rated Speed	:	5500 RPM ± 1000 RPM
1-5. Air Delivery	:	4.9 CFM
1-6. Static Pressure	:	0.11 Inch-H_2O
1-7. Rated Current	:	0.09 AMP
1-8. Rated Power	:	1.1 WATTS
1-9. Noise Level	:	25 dB(A)
1-10. Direction of Rotation	:	Counter-clockwise viewed front fan blade
1-11. Operating Temperature	:	-10 to +70 Deg.C
1-12. Storage Temperature	:	-40 to +70 Deg.C
1-13. Bearing System	:	Lubricated sleeve bearing system
1-14. Weight	:	15.3 g
1-15. Safety	:	UL/CUR/TUV/CE Approvals
1-16. Vibration	:	Vibration of acceleration 1.5G and Frequency 5~50~5Hz is applied in the 3 directions(X,Y,Z) for 30 minutes, each Direction at the cycle of 1 minute.

1.11

MODEL : KD1204PFS2

P/N : H

PERFORMANCE CURVES

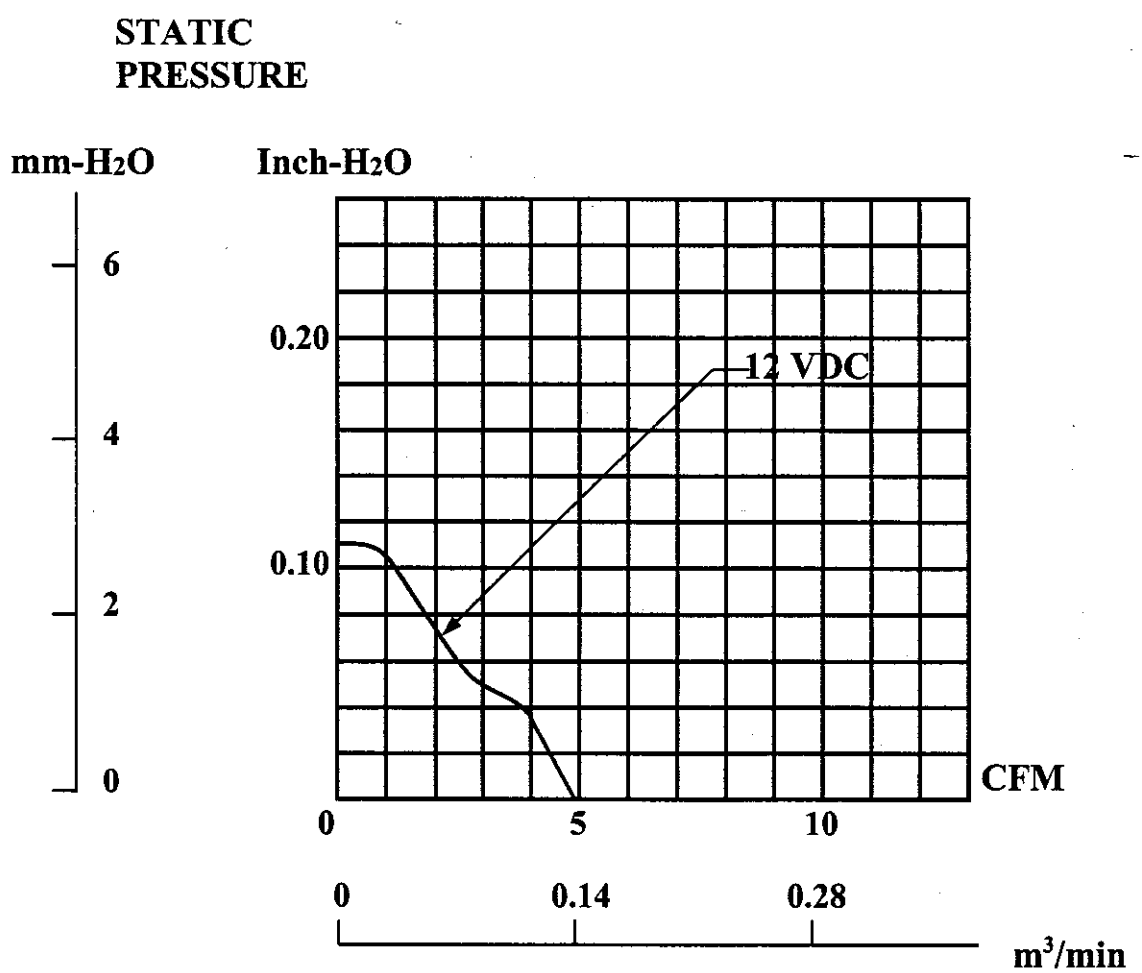

MATERIAL

2-1. Frame	:	Thermoplastic PBT of UL 94V-0
2-2. Impeller	:	Thermoplastic PBT of UL 94V-0
2-3. Bobbin	:	Thermoplastic PBT of UL 94V-0
2-4. Lead Wire	:	UL2468,26AWG,+RED;-BLACK

DIMENSIONS

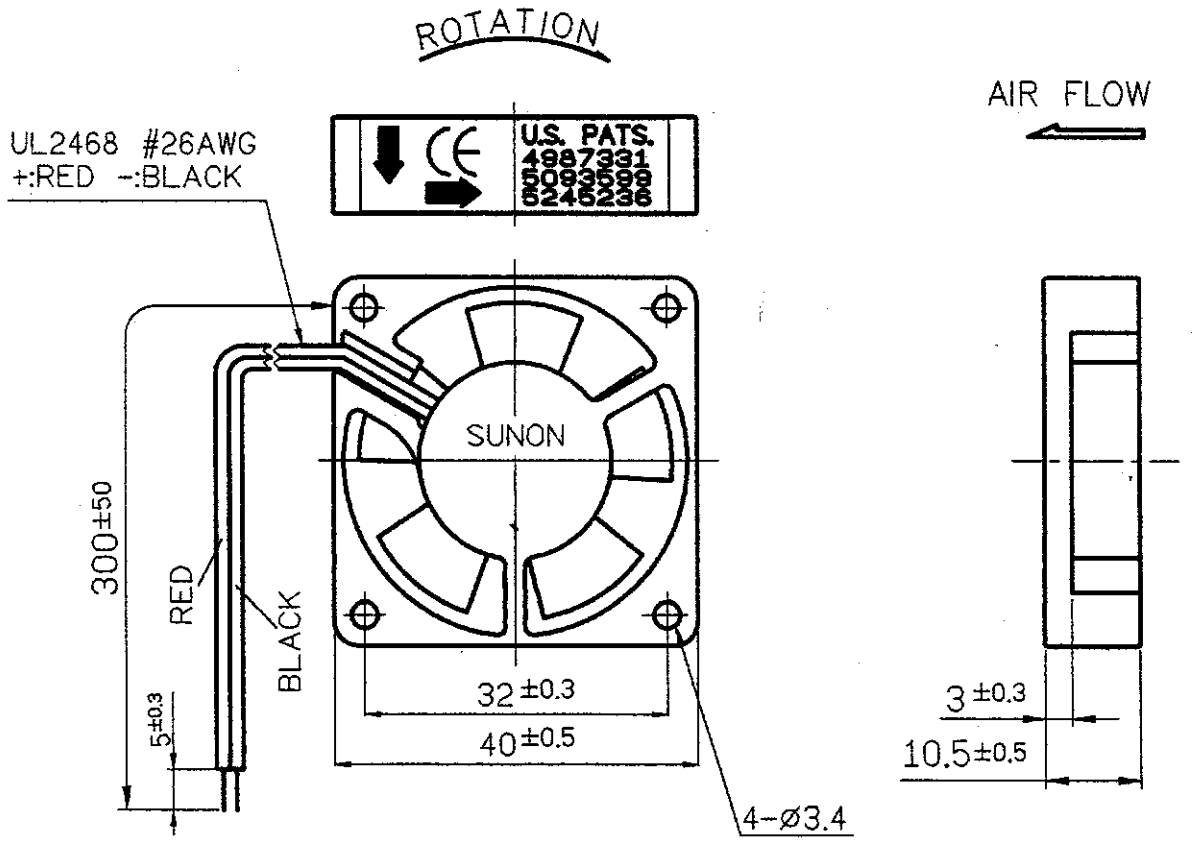

Air Flow Direction: Label side.

UNITS : mm

Notes

1. SUNON will not guarantee the products if the application of our products is exceeded the limitation which is specified on this specification.

2. In case of change of the specification specified on this document, a written notice is requested in advance.

3. Please do not touch the impeller with pressure and never bring the fan with lead wire. The bearings and lead wire may be damaged.

4. No guarantee on the products against the safety problem or failure caused by powder dust, drop of water or insect.

5. If there is any data or related documentation different from this data sheet, this data sheet is the principal reference.

6. For the purpose of MIS, please indicate SPEC No. on every order.

7. In case of the fan has no polarity protection function, wires with same color (electrode) must be connected together during the assembly. (i.e. red + red, black + black) or the fan will be damaged immediately.

8. Please do not use the fan in the environment of corrosive gas or liquid or any detrimental gas.

9. Please do not store the fan in the environment of high / low temperature, high humidity or any detrimental gas. Please store the fan within 6 months, every 6 months, there shall be a linkage of electric current to the fan, even though the fan is stored in room temperature.

10. While the fan is in operation, please do not lock the fan intentionally for a long period of time, since the continuous stoppage will result in over-heat and damage of the fan.

11. During the installation of the fan, please pay substantial attention to possible noise cause by resonance vibration and vibration.

12. During the testing of the fan, please be sure to use finger guard to insure safety.

13. Unless otherwise specified, if there is any doubt in the judgement, the temperature and relative humidity range of environment will be take in according to the standard test condition as 25℃ and 65%.

業務部章 行章